THIS DRAWING IS UNPUBLISHED. RELEASED FOR PUBLICATION -,- .
© COPYRIGHT - BY TYCO ELECTRONICS CORPORATION. ALL RIGHTS RESERVED.

LOC	DIST
AJ	00

REVISIONS

P	LTR	DESCRIPTION	DATE	DWN	APVD
	Y	REV PER ECO 08-009474	7/21/2008	DW	JL

1. POLYESTER PBT PER MIL-M-24519, TYPE GPT-15F, UL94V-O RATED, COLOR:NATURAL
2. POLYESTER PBT PER MIL-M-24519, TYPE GPT-15F, UL94V-O RATED, COLOR:BLACK
3. POLYMETHYLPENTENE, GENERAL PURPOSE.
4. ZINC PER QQ-Z-363.
5. PHOSPHOR BRONZE PER QQ-B-750.
6. BRASS PER ASTM-B-453.
7. NICKEL PLATE PER QQ-N-290, 3.81 μm [.000150] MINIMUM THICK.
8. TIN PLATE PER ASTM-B-545. 3.81 μm [.000150] MINIMUM THICK.
9. GOLD PLATE PER MIL-G-45204, 0.76 μm [.000030] MINIMUN THICK.
10. SILVER PLATE PER QQ-S-365, 2.54 μm [.000100] MINIMUN THICK.
11. TIN PLATE PER ASTM-B-545, 3.81 μm [.000150] MINIMUM THICK.
12. SEE INSTRUCTION SHEET 2769.

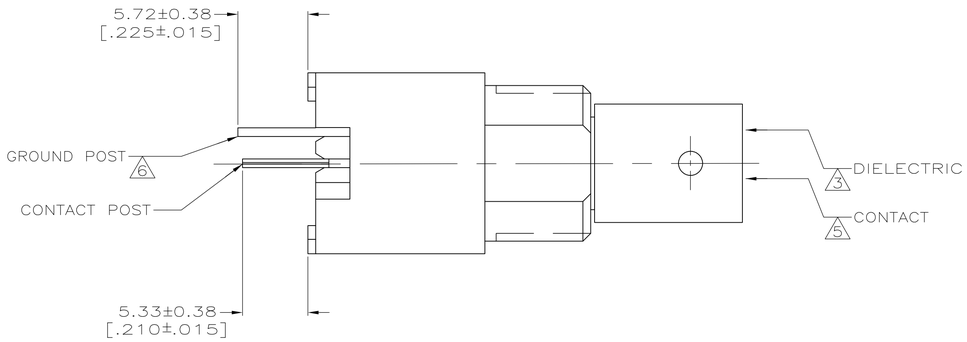

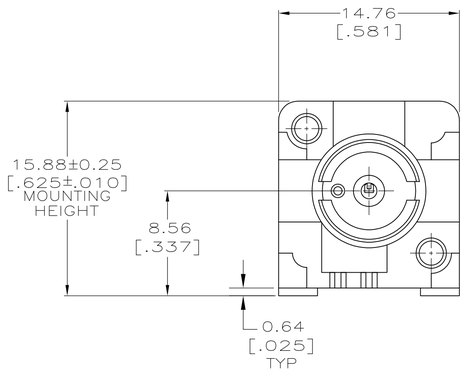

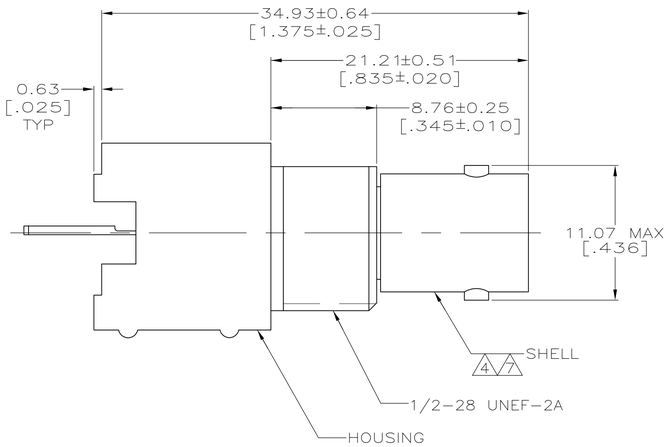

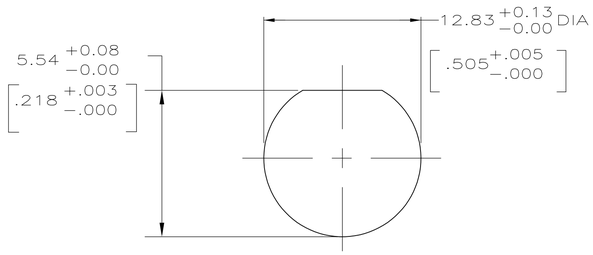

RECOMMENDED PANEL CUTOUT

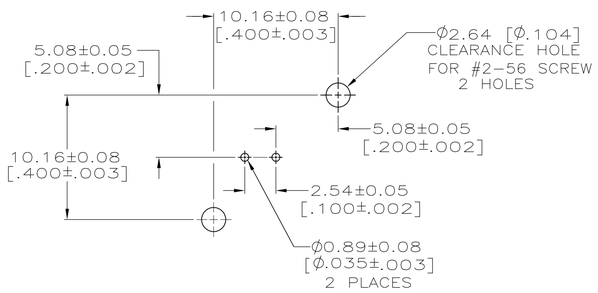

PCB CONFIGURATION

	GROUND POST PLATING	CONTACT POST PLATING	CONTACT PLATING	HOUSING MATERIAL	PART NUMBER
OBSOLETE	11	11	11	2	9-226993-0
	8	8	9	2	226993-6
SUPERSEDED BY 226993-3	8	8	10	1	226993-5
SUPERSEDED BY 226993-6	8	8	10	2	226993-4
OBSOLETE	8	8	9	1	226993-3
OBSOLETE	8	8	8	2	226993-2
	8	8	8	1	226993-1

THIS DRAWING IS A CONTROLLED DOCUMENT.

DIMENSIONS: INCHES

TOLERANCES UNLESS OTHERWISE SPECIFIED:
0 PLC ± –
1 PLC ± –
2 PLC ± 0.20 [.008]
3 PLC ± –
4 PLC ± –
ANGLES ± –

MATERIAL 1 2 3 4 5 6
FINISH 7 8 9 10 11

DWN B.SCOTT 05-02-91
CHK J. LIPPERT 6-11-91
APVD J. LIPPERT 8-07-91
PRODUCT SPEC 108-12078
APPLICATION SPEC –
WEIGHT –

Tyco Electronics
Tyco Electronics Corporation
Harrisburg, PA 17105-3608

NAME JACK,VERTICAL, 50 OHM,PCB,SERIES BNC –

SIZE A1 | CAGE CODE 00779 | DRAWING NO C-226993 | RESTRICTED TO –

CUSTOMER DRAWING | SCALE 2:1 | SHEET 1 OF 1 | REV Y