SILICON DESIGNS, INC

Model 2240
ANALOG ACCELEROMETER MODULE

- **Hermetically Sealed Titanium Case**
- **Detachable Cable (sold separately)**
- **Capacitive Micromachined**
- **Nitrogen Damped**
- **±4V Differential Output or 0.5V to 4.5V Single Ended Output**
- **Fully Calibrated**
- **Low Power Consumption**
- **-55 to +125°C Operation**
- **+9 to +32V DC Power**
- **Simple Four Wire Connection**
- **Low Impedance Outputs Will Drive Up To 50 Feet of Cable**
- **Responds to DC and AC Acceleration**
- **Non Standard g Ranges Available**
- **Low Noise**
- **Serialized for Traceability**

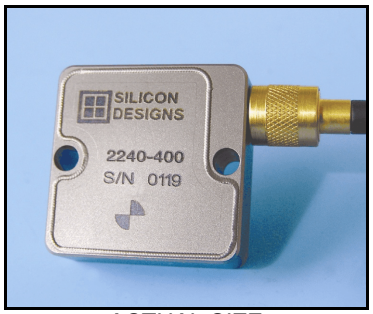

ACTUAL SIZE
(CABLE SOLD SEPARATELY)

ORDERING INFORMATION

Full Scale Acceleration	Accelerometer Model Number
± 2 g	2240-002
± 5 g	2240-005
± 10 g	2240-010
± 25 g	2240-025
± 50 g	2240-050
±100 g	2240-100
±200 g	2240-200

Cable Length	Cable Model Number
4 ft	2240-CAB-04
14 ft	2240-CAB-14
33 ft	2240-CAB-33
50 ft	2240-CAB-50

DESCRIPTION

The model 2240 accelerometer is a hermetically sealed version of the model 2220. This rugged module combines an integrated model 1221L accelerometer with high drive, low impedance buffering for measuring acceleration in commercial/industrial environments. It is tailored for zero to medium frequency instrumentation applications. The titanium case is sealed using a laser welding process and is easily mounted via two #4 (or M3) screws. On-board regulation is provided to minimize the effects of supply voltage variation. It is relatively insensitive to temperature changes and gradients. A model 2240-CAB cable, sold separately (see order information above), connects via a miniature 4-pin screw-on connector. The cable's shield is electrically connected to the titanium case while the ground (GND) wire is isolated from the case. An initial calibration sheet (2240-CAL) is included and periodic calibration checking is available.

OPERATION

The Model 2240 accelerometer module produces two analog voltage outputs which vary with acceleration as shown in the graph on the next page. The sensitive axis is perpendicular to the bottom of the package, with positive acceleration defined as a force pushing on the bottom of the package. The signal outputs are fully differential about a common mode voltage of approximately 2.5 volts. The output scale factor is independent from the supply voltage of +9 to +32 volts. At zero acceleration the output differential voltage is nominally 0 volts DC; at ±full scale acceleration the output differential voltage is ±4 volts DC respectively.

APPLICATIONS

- FLIGHT TESTS
- VIBRATION MONITORING
- VIBRATION ANALYSIS
- MACHINE CONTROL
- MODAL ANALYSIS
- ROBOTICS
- CRASH TESTING
- INSTRUMENTATION

SIGNAL DESCRIPTIONS

Vs and GND (Power): Red and Black wires respectively for the 2240-CAB cable (ordered separately). Power (+9 to +32 Volts DC) and ground.

AOP and AON (Output): Green and White wires respectively for the 2240-CAB cable (sold separately). Analog output voltages proportional to acceleration; AOP voltage increases (AON decreases) with positive acceleration. At zero acceleration both outputs are nominally equal to 2.5 volts. The device experiences positive (+1g) acceleration with its lid facing up in the Earth's gravitational field. Either output can be used individually or the outputs can be used differentially. (See response plot below).

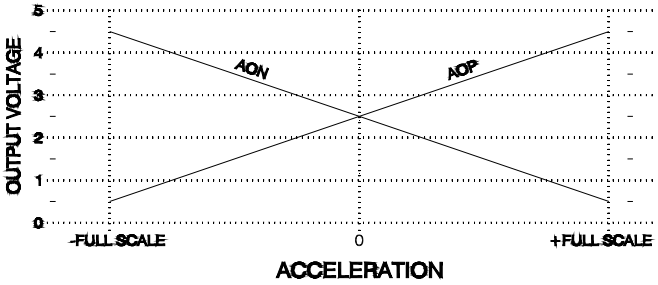

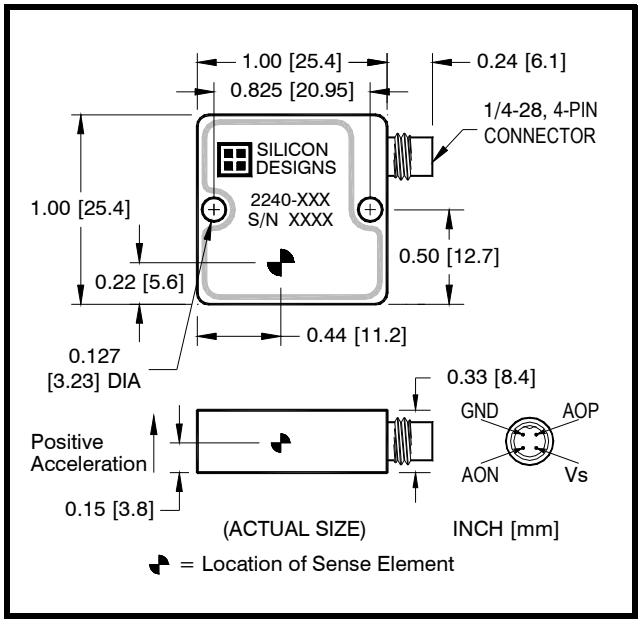

PERFORMANCE - By Model: V_S=+9 to +32VDC, T_C=25°C								
MODEL NUMBER	**2240-002**	**2240-005**	**2240-010**	**2240-025**	**2240-050**	**2240-100**	**2240-200**	**UNITS**
Input Range	±2	±5	±10	±25	±50	±100	±200	g
Frequency Response (Nominal, 3 dB) [1]	0 - 400	0 - 600	0 - 1000	0 - 1500	0 - 2000	0 - 2500	0 - 3000	Hz
Sensitivity, Differential [2]	2000	800	400	160	80	40	20	mV/g
Output Noise, Differential (RMS, typical)	8	9	10	25	50	100	200	µg/(root Hz)
Max. Mechanical Shock (0.1 ms)	2000							g

Note 1: 250Hz ±100Hz, -3dB bandwidth, optionally available.

Note 2: Single ended sensitivity is half of values shown.

PERFORMANCE - All Models: Unless otherwise specified, Vs=+9 to +32VDC, T_C=25°C, Differential Mode.					
PARAMETER		**MIN**	**TYP**	**MAX**	**UNITS**
Cross Axis Sensitivity			1	2	%
Bias Calibration Error	-002			4.0	% of span
	-005 thru -200			1.5	
Bias Temperature Shift (T_C= -40 to +80°C)	-002		100	200	(ppm of span)/°C
	-005 thru -200		50	100	
Scale Factor Calibration Error [3]			1	2	%
Scale Factor Temperature Shift (T_C= -40 to +80°C)	-002 thru -010	-250		+150	ppm/°C
	-025 thru -200	-150			
Non-Linearity (-90 to +90% of Full Scale) [3, 4]	-002 thru -050		0.15	0.5	% of span
	-100		0.25	1.0	
	-200		0.40	1.5	
Power Supply Rejection Ratio		50	>65		dB
Output Impedance			1		Ω
Output Common Mode Voltage			2.45		VDC
Operating Voltage		9		32	VDC
Operating Current (AOP & AON open)			12	14	mA DC
Mass (not including cable)			10		grams
Cable Mass			25		grams/meter

Note 3: 100g versions and above are tested from -65g to +65g.

Note 4: Tighter tolerances are available on special order.

CABLE SPECIFICATIONS & LENGTH CONSIDERATIONS

The cable consists of four 30 AWG (7x38) silver plated copper wires with PTFE insulation surrounded by a braided shield. The black FEP shield jacket has a nominal outer diameter of 0.100". Cable lengths of up to 50 feet (15 meters) can be added to the model 2240's standard 4 foot cable without the need to test for output instability. For lengths longer than 50 feet, we recommend you check each individual installation for oscillation by tapping the accelerometer and watching the differential output for oscillation in the 20kHz to 50kHz region. If no oscillation is present then the cable length being used is OK. From the standpoint of output current drive and slew rate limitations, the model 2240 is capable of driving over 2000 feet (600 meters) of its cable type but at some length between 50 and 2000 feet, each device will likely begin to exhibit oscillation.

CONVERTING THE 2240's DIFFERENTIAL OUTPUT TO SINGLE ENDED

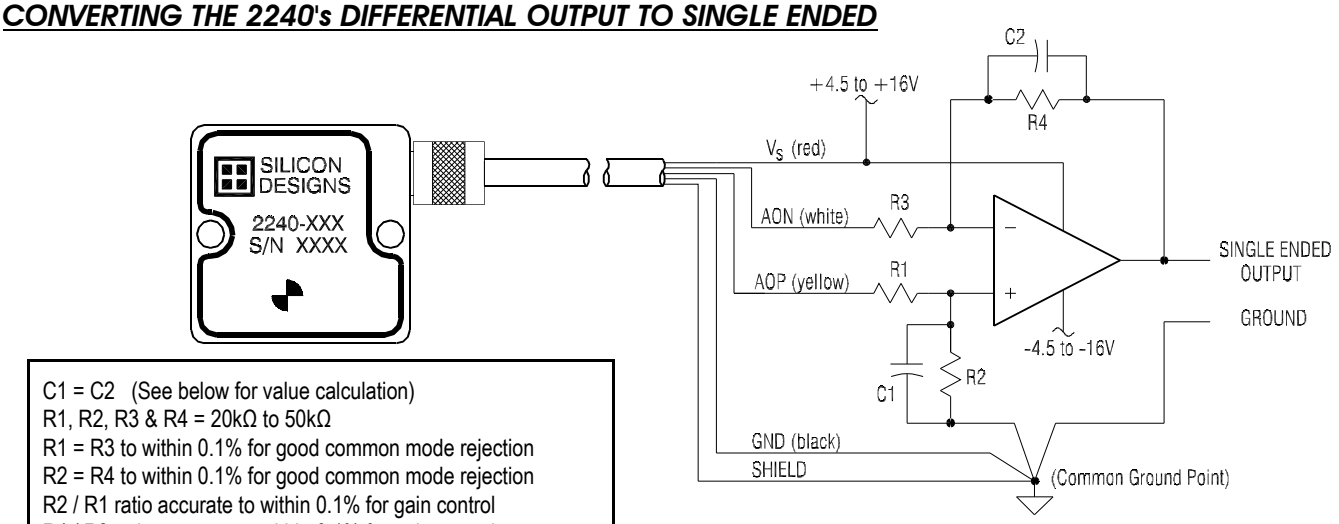

C1 = C2 (See below for value calculation)
R1, R2, R3 & R4 = 20kΩ to 50kΩ
R1 = R3 to within 0.1% for good common mode rejection
R2 = R4 to within 0.1% for good common mode rejection
R2 / R1 ratio accurate to within 0.1% for gain control
R4 / R3 ratio accurate to within 0.1% for gain control

To achieve the highest resolution and lowest noise performance from your model 2240 accelerometer module, it should be connected to your voltage measurement instrument in a differential configuration using both the **AOP** and **AON** output signals. If your measurement instrument lacks differential input capability or you desire to use a differential input capable instrument in single ended mode, then the circuit above can be used to preserve the low noise performance of the model 2240 while using a single ended type connection.

This circuit converts the ± 4 Volt differential output of the model 2240 accelerometer, centered at +2.5 Volts, to a single ended output centered about ground (0.0 Volts). It provides the advantage of low common mode noise by preventing the accelerometer's ground current from causing an error in the voltage reading.

The op-amp should be located as close as possible to your voltage monitoring equipment so that the majority of the signal path is differential. Any noise present along the differential path will affect both wires to the same degree and the op-amp will reject this noise because it is a common mode signal. The op-amp type is not critical; a µA741 or ¼ of a LM124 can be used. Both plus and minus supplies are needed for the op-amp to accommodate the positive and negative swings of the single ended output.

For this design, always set $R_1 = R_3$, $R_2 = R_4$ and $C_1 = C_2$. The gain of the circuit is then determined by the ratio R_2/R_1. When $R_1 = R_2 = R_3 = R_4$, the gain equals 1 and the output swing will be ± 4 Volts single ended with respect to ground. To obtain a ± 5 Volt single ended output, set $R_2/R_1 = R_4/R_3 = 5/4 = 1.25$. The single ended output of the op-amp will be centered at ground if R_2 and C_1 are tied to ground; using some other fixed voltage for this reference will shift the output. The value of the optional capacitors C_1 and C_2 ($C_1 = C_2$) can be selected to roll off the frequency response to the frequency range of interest. The cutoff frequency f_0 (-3 dB frequency) for this single order low pass filter is given by:

$$f_0 = \frac{1}{2\pi R_2 C_1}$$