CTS Electrocomponents

Series 220 Data Sheet

Rotary DIP Switch

7x7mm Miniature Rotary DIP Switch



Features

Optimized Mechanical Features

- Robust metal bracket design
- Standard through hole and surface mount gull-wing terminal configurations
- Binary Coded Decimal, Hexadecimal code and Single pole output
- Clockwise or counterclockwise rotation

Optimized Contact System

- Robust wiping contact
- Precise detents

Materials

- Gold plated beryllium copper contacts
- Tin coated terminals for better solderability
- High temperature materials (UL94V-0)
- RoHS compliant

Electrical and Mechanical Specifications

Switch Options
4,10,16 positions

Output
Binary Coded Decimal
Hexadecimal Code
Single Pole

Switch Contact Resistance
100 milliohms maximum

Insulation Resistance
1000 Mohms minimum between insulated terminals

Dielectric Strength
250 VAC for 1 minute between adjacent terminals

Maximum Rating
100 mA , 50 VDC

Minimum Load
1 µA 20m VDC

Operating Temperature
- 40°C to +85°C

Rotational Torque
40~200 gf-cm

Actuation Life
10,000 steps

Allowable Solder Time
Reflow soldering up to 5 seconds at 260°C max.
Wave soldering up to 10 seconds at 260°C max.
Manual soldering up to 4 seconds at 350°C max.

Packaging
Standard : Anti-static tube packaging
Optional : Tape and reel packaging

© 2015 CTS Corporation. All rights reserved. Information subject to change.

CTS SERIES 220AM_10,16R - Surface Mount Gull Wing, 10 and 16 Position

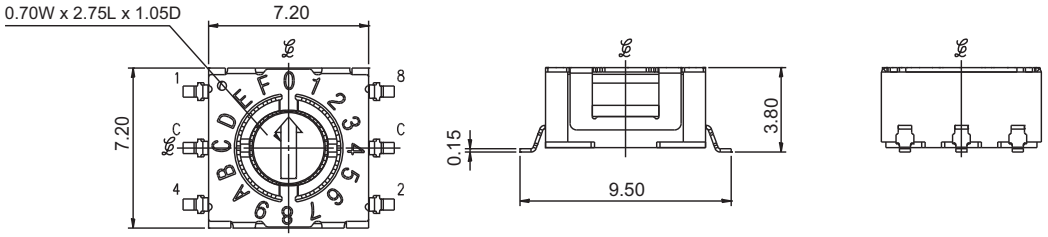

PCB LAYOUT

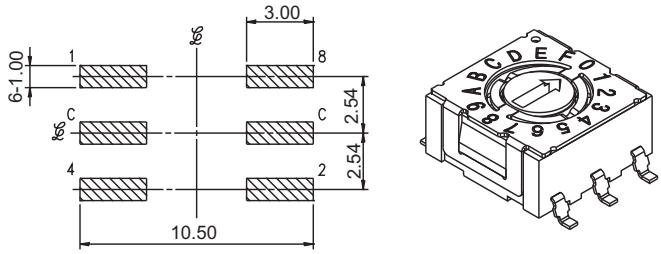

DIMENSION : mm
STANDARD TOLERANCE :
.XX (2 PLACE) : ±0.30

CODE TABLE

POSITIONS	CODE 1	2	4	8
0				
1	●			
2		●		
3	●	●		
4			●	
5	●		●	
6		●	●	
7	●	●	●	
8				●
9	●			●
A		●		●
B	●	●		●
C			●	●
D	●		●	●
E		●	●	●
F	●	●	●	●

Dot indicates terminal to common connection. All switches are continuous rotation.

10 Position - Numbered 0 through 9
16 Position - Numbered 0 through F

CTS SERIES 220AD_10,16 - Standard Through Hole, 10 and 16 Position

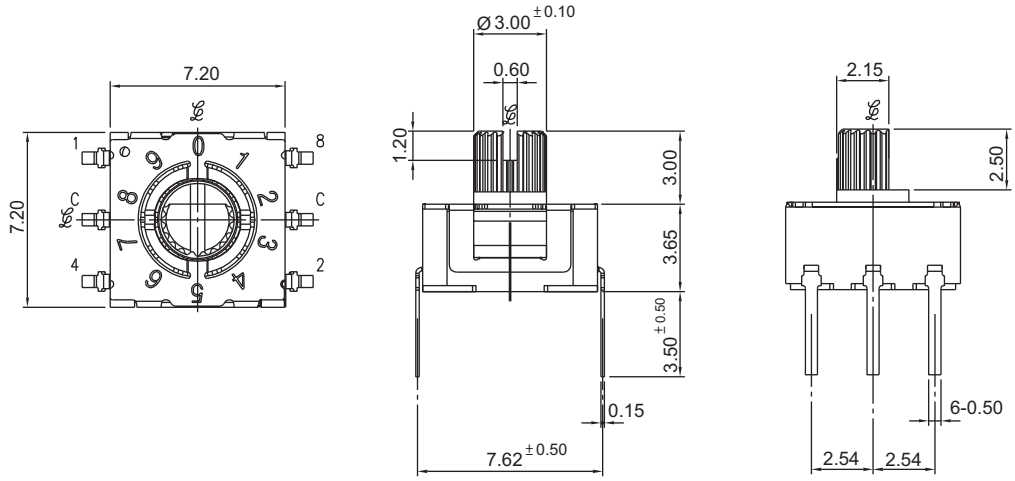

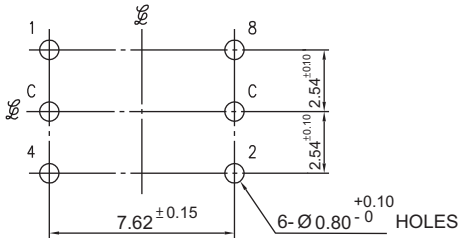

DIMENSION : mm
STANDARD TOLERANCE :
.XX (2 PLACE) : ±0.30

CODE TABLE

POSITIONS	CODE 1	2	4	8
0				
1	●			
2		●		
3	●	●		
4			●	
5	●		●	
6		●	●	
7	●	●	●	
8				●
9	●			●
A		●		●
B	●	●		●
C			●	●
D	●		●	●
E		●	●	●
F	●	●	●	●

Dot indicates terminal to common connection. All switches are continuous rotation.

10 Position - Numbered 0 through 9
16 Position - Numbered 0 through F

© 2015 CTS Corporation. All rights reserved. Information subject to change.

CTS SERIES 220AM_04R - Surface Mount Gull Wing, 4 Position

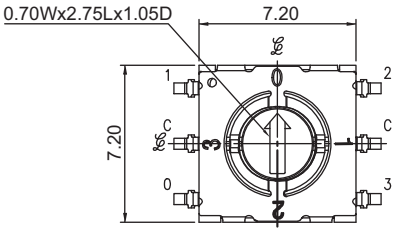

PCB LAYOUT

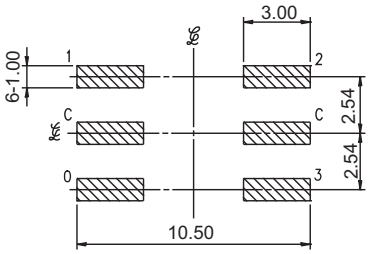

CODE TABLE

POSITIONS	CODE 0	1	2	3
0	●			
1		●		
2			●	
3				●

Dot indicates terminal to common connection. All switches are continuous rotation.

4 Position - Single pole

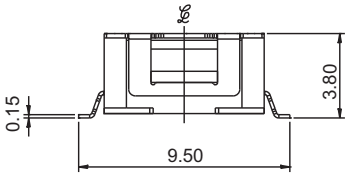

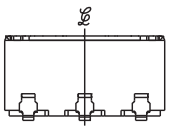

DIMENSION : mm
STANDARD TOLERANCE :
.XX (2 PLACE) : ±0.30

CTS SERIES 220AD_04 - Standard Through Hole, 4 Position

CODE TABLE

POSITIONS	CODE 0	1	2	3
0	●			
1		●		
2			●	
3				●

Dot indicates terminal to common connection. All switches are continuous rotation.

4 Position - Single pole

PCB LAYOUT

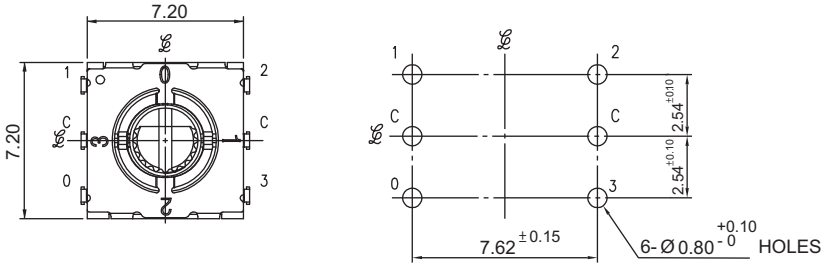

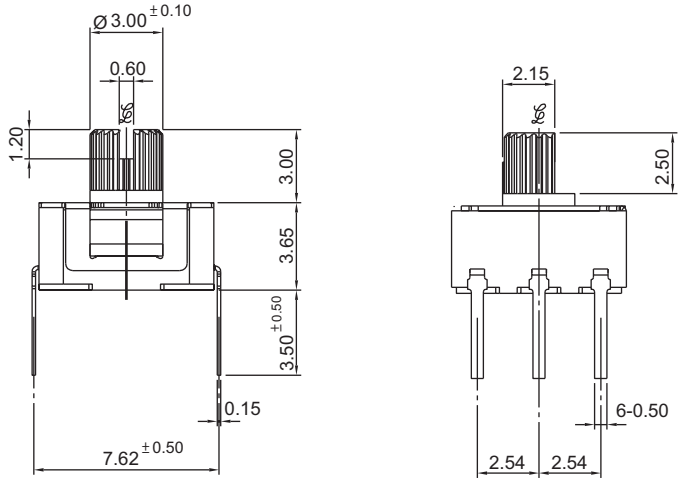

DIMENSION : mm
STANDARD TOLERANCE :
.XX (2 PLACE) : ±0.30

© 2015 CTS Corporation. All rights reserved. Information subject to change.

Actuator Options

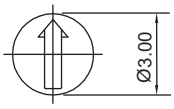

A: FLUSH ARROW ROTOR

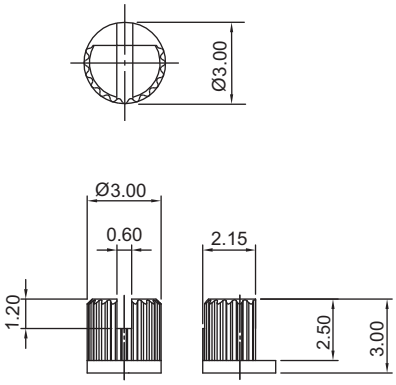

B: KNURLED, SLOTTED, FLATTED SHAFT

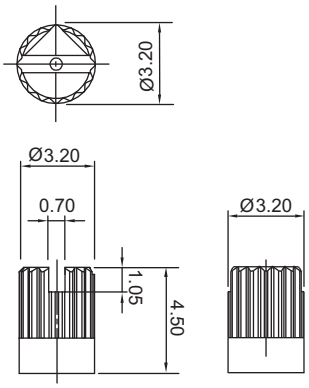

C: KNURLED, SLOTTED SHAFT

DIMENSION : mm
STANDARD TOLERANCE :
.XX (2 PLACE) : ±0.30

Position Options

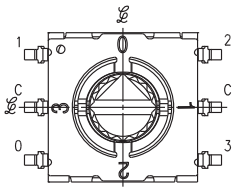

04: 4 POSITIONS

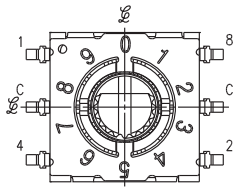

10: 10 POSITIONS

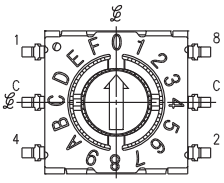

16: 16 POSITIONS

Ordering Information

220 – AM A 04 R

BLANK : TUBE PACKAGING
R : TAPE & REEL PACKAGING (SURFACE MOUNT ONLY)

04: 4 POSITIONS
10: 10 POSITIONS
16: 16 POSITIONS

AM: SURFACE MOUNT GULL WING, 3.8MM HEIGHT
AD: STANDARD THROUGH HOLE, 3.6MM HEIGHT

A: FLUSH ARROW ROTOR
B: KNURLED, SLOTTED, FLATTED SHAFT
C: KNURLED, SLOTTED SHAFT

© 2015 CTS Corporation. All rights reserved. Information subject to change.