This document was generated on 04/20/2010

PLEASE CHECK WWW.MOLEX.COM FOR LATEST PART INFORMATION

Part Number: 0022283316

Status: Active

Description: 2.54mm (.100") Pitch KK® Header, Breakaway, Vertical, with Polarizing Wall, 31 Circuits, Tin (Sn) Plating, with Backwalls Removed

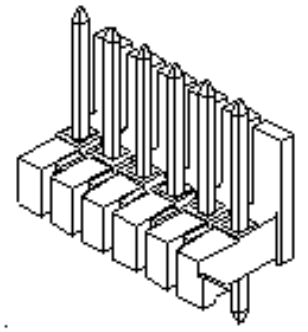

Series image - Reference only

Documents:

3D Model
Packaging Specification (PDF)
Drawing (PDF)
Product Specification PS-10-07 (PDF)
RoHS Certificate of Compliance (PDF)

Agency Certification

CSA	LR19980

General

Product Family	PCB Headers
Series	42225
Application	Wire-to-Board
Comments	Backwalls Removed
Product Name	KK®

Physical

Breakaway	Yes
Circuits (Loaded)	31
Circuits (maximum)	31
Color - Resin	Black
Durability (mating cycles max)	25
Flammability	94V-0
Glow-Wire Compliant	No
Lock to Mating Part	None
Material - Metal	Brass
Material - Plating Mating	Tin
Material - Plating Termination	Tin
Material - Resin	Nylon
Number of Rows	1
Orientation	Vertical
PC Tail Length (in)	0.120 In
PC Tail Length (mm)	3.05 mm
PCB Locator	No
PCB Retention	None
PCB Thickness Recommended (in)	0.062 In
PCB Thickness Recommended (mm)	1.60 mm
Packaging Type	Bag
Pitch - Mating Interface (in)	0.100 In
Pitch - Mating Interface (mm)	2.54 mm
Plating min: Mating (µin)	100
Plating min: Mating (µm)	2.5
Plating min: Termination (µin)	100
Plating min: Termination (µm)	2.5
Polarized to Mating Part	Yes
Polarized to PCB	No
Shrouded	Partial
Stackable	No
Temperature Range - Operating	0°C to +75°C
Termination Interface: Style	Through Hole

Electrical

EU RoHS
ELV and RoHS Compliant
REACH SVHC
Contains SVHC: No
Halogen-Free Status
Not Reviewed

China RoHS

Need more information on product environmental compliance?

Email productcompliance@molex.com
For a multiple part number RoHS Certificate of Compliance, click here

Please visit the Contact Us section for any non-product compliance questions.

Search Parts in this Series
42225Series

Mates With
2695 , 6471 , 7880 , 4455 , 7720

Current - Maximum per Contact	4A
Voltage - Maximum	250V

Solder Process Data

Duration at Max. Process Temperature (seconds)	5
Lead-free Process Capability	Wave Capable (TH only)
Max. Cycles at Max. Process Temperature	1
Process Temperature max. C	235

Material Info

Old Part Number	42225-0241

Reference - Drawing Numbers

Product Specification	PS-10-07
Sales Drawing	SD-42225-001

This document was generated on 04/20/2010

PLEASE CHECK WWW.MOLEX.COM FOR LATEST PART INFORMATION

NO. OF CKTS.	DIM. A	DIM. B
2	.100/2.54	.200/5.08
3	.200/5.08	.300/7.62
4	.300/7.62	.400/10.16
5	.400/10.16	.500/12.70
6	.500/10.16	.600/15.24
7	.600/15.24	.700/17.78
8	.700/17.78	.800/20.32
9	.800/20.32	.900/22.86
10	.900/22.86	1.000/25.40
11	1.000/25.40	1.100/27.94
12	1.100/27.94	1.200/30.48
13	1.200/30.48	1.300/33.02
14	1.300/33.02	1.400/35.56
15	1.400/35.56	1.500/38.10
16	1.500/38.10	1.600/40.64
17	1.600/40.64	1.700/43.18
18	1.700/43.18	1.800/45.72
19	1.800/45.72	1.900/48.26
20	1.900/48.26	2.000/50.80
21	2.000/50.80	2.100/53.34
22	2.100/53.34	2.200/55.88
23	2.200/55.88	2.300/58.42
24	2.300/58.42	2.400/60.96
25	2.400/60.96	2.500/63.50
26	2.500/63.50	2.600/66.04
27	2.600/66.04	2.700/68.58
28	2.700/68.58	2.800/71.12
29	2.800/71.12	2.900/73.66
30	2.900/73.66	3.000/76.20
31	3.000/76.20	3.100/78.74
32	3.100/78.74	3.200/81.28
33	3.200/81.28	3.300/83.82
34	3.300/83.82	3.400/86.36
35	3.400/86.36	3.500/88.90
36	3.500/88.90	3.600/91.44

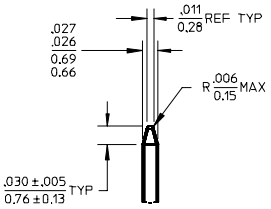

DETAIL X
SCALE 5:1

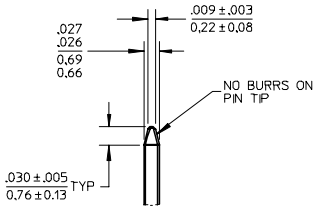

DETAIL Y
SCALE 5:1

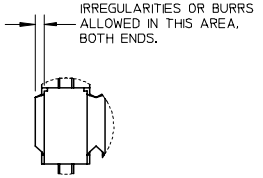

DETAIL Z
SCALE 5:1

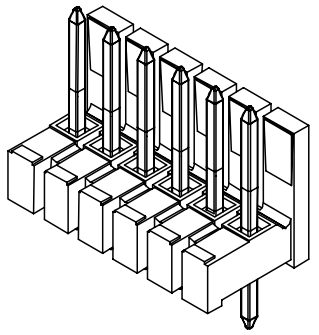

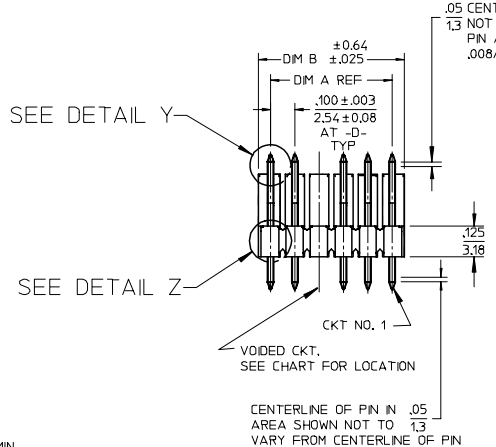

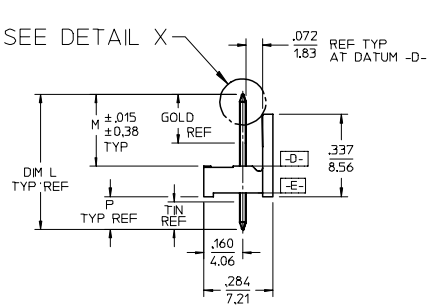

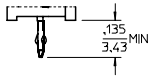

KINKED PIN DETAIL
SEE NOTE 5

NOTES:
1. MATERIAL:GLASS FILLED NYLON, 94V-0, COLOR: BLACK
2. FINISH:
   (154) *OVERALL TIN: .000100/0.00254 MIN.
   OVER .000050/0.00127 MIN NICKEL.
   (208) SELECT GOLD: .000015/0.00038 MIN,
   *SELECT TIN: .000100/0.00254 MIN,
   OVERALL NICKEL UNDERPLATE: .000050/0.00127 MIN.
   (228) SELECT GOLD: .000030/0.00076 MIN,
   *SELECT TIN: .000100/0.00254 MIN.
   OVERALL NICKEL UNDERPLATE: .000050/0.00127 MIN.
   *THE PRIMARY SHIPPING CARTON WILL BE LABELED
   "COMPLIANT TO RoHS DIRECTIVE 2002/95/EC AND ELV
   ANNEX II OF DIRECTIVE 2000/53/EC". CARTONS WITHOUT
   THIS LABEL MAY CONTAIN PRODUCT WITH TIN-LEAD PLATING
3. PRODUCT SPECIFICATION PS 10-07.
4. PACKAGING INFORMATION: SEE TABLES
5. KINK PIN SPECIFICATION: SEE SMES-42003
6. HEADERS ARE NOT STACKABLE ON .100/2.54 CENTERS.
7. SOLDERABILITY PER SMES-152.
8. PIN PUSH OUT FORCE: 3 LBS. MIN.

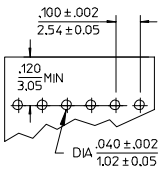

RECOMMENDED PC BOARD LAYOUT

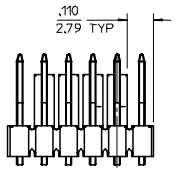

REMOVED POLARIZING WALL OPTION

2-*	K
1	K3
SHEET	REV

ADD DETAIL VIEWS 2005/08/01
EC NO: UCP2005-0488 2005/08/04
DRWN:JLOWE CH'KD:ADERR 2005/08/05
APPR:FSMITH
DESCRIPTION
K3
REV

QUALITY SYMBOLS
▼=0
▽=0

GENERAL TOLERANCES (UNLESS SPECIFIED)

	mm	INCH
4 PLACES	± ---	± ---
3 PLACES	± ---	± .010
2 PLACES	± 0.25	± .014
1 PLACE	± 0.36	± ---
ANGULAR ±1/2°		

DRAFT WHERE APPLICABLE MUST REMAIN WITHIN DIMENSIONS

DIMENSION STYLE: IN/MM
SCALE: 1:1
DESIGN UNITS: INCH
THIRD ANGLE PROJECTION

DRAWN BY	JSCHAFER
DATE	2004/03/20
CHECKED BY	KSAMIEC
DATE	2004/03/20
APPROVED BY	MARGULIS
DATE	2004/03/20
MATERIAL NO.	SEE CHART
DOCUMENT NO.	SD-42225-001
SHEET NO.	1 OF 6

TITLE: .100 POLARIZING BREAKAWAY HEADER ASSY

MOLEX INCORPORATED

SIZE B

THIS DRAWING CONTAINS INFORMATION THAT IS PROPRIETARY TO MOLEX INCORPORATED AND SHOULD NOT BE USED WITHOUT WRITTEN PERMISSION

A-42225-0002/0036	
HEADER NUMBER:	41410
PIN NUMBER:	42663-AXA154
PIN LENGTH: L	.540/13.72
MATING LENGTH: M	.295/7.49
GOLD POINT: G	N/A
PC TAIL LENGTH: P	.120/3.05
TIN: T	OVERALL
CKTS:	2-36
KINKS:	NO
REMOVED BACKWALLS:	NO
VOIDED CKTS:	NONE
PACKAGING:	BULK 40873-0056

CKTS	MATERIAL NUMBER	ENG NUMBER	CKTS	MATERIAL NUMBER	ENG NUMBER
02	22-28-3020	A-42225-0002	20	22-28-3200	A-42225-0020
03	22-28-3030	A-42225-0003	21	22-28-3210	A-42225-0021
04	22-28-3040	A-42225-0004	22	22-28-3220	A-42225-0022
05	22-28-3050	A-42225-0005	23	22-28-3230	A-42225-0023
06	22-28-3060	A-42225-0006	24	22-28-3240	A-42225-0024
07	22-28-3070	A-42225-0007	25	22-28-3250	A-42225-0025
08	22-28-3080	A-42225-0008	26	22-28-3260	A-42225-0026
09	22-28-3090	A-42225-0009	27	22-28-3270	A-42225-0027
10	22-28-3100	A-42225-0010	28	22-28-3280	A-42225-0028
11	22-28-3110	A-42225-0011	29	22-28-3290	A-42225-0029
12	22-28-3120	A-42225-0012	30	22-28-3300	A-42225-0030
13	22-28-3130	A-42225-0013	31	22-28-3310	A-42225-0031
14	22-28-3140	A-42225-0014	32	22-28-3320	A-42225-0032
15	22-28-3150	A-42225-0015	33	22-28-3330	A-42225-0033
16	22-28-3160	A-42225-0016	34	22-28-3340	A-42225-0034
17	22-28-3170	A-42225-0017	35	22-28-3350	A-42225-0035
18	22-28-3180	A-42225-0018	36	22-28-3360	A-42225-0036
19	22-28-3190	A-42225-0019			

A-42225-0037/0071	
HEADER NUMBER:	41410
PIN NUMBER:	42663-AXB208
PIN LENGTH: L	.540/13.72
MATING LENGTH: M	.295/7.49
GOLD POINT: G	.140/3.56
PC TAIL LENGTH: P	.120/3.05
TIN: T	.100/2.54
CKTS:	2-36
KINKS:	NO
REMOVED BACKWALLS:	NO
VOIDED CKTS:	NONE
PACKAGING:	BULK 40873-0056

CKTS	MATERIAL NUMBER	ENG NUMBER	CKTS	MATERIAL NUMBER	ENG NUMBER
02	22-28-3021	A-42225-0037	20	22-28-3201	A-42225-0055
03	22-28-3031	A-42225-0038	21	22-28-3211	A-42225-0056
04	22-28-3041	A-42225-0039	22	22-28-3221	A-42225-0057
05	22-28-3051	A-42225-0040	23	22-28-3231	A-42225-0058
06	22-28-3061	A-42225-0041	24	22-28-3241	A-42225-0059
07	22-28-3071	A-42225-0042	25	22-28-3251	A-42225-0060
08	22-28-3081	A-42225-0043	26	22-28-3261	A-42225-0061
09	22-28-3091	A-42225-0044	27	22-28-3271	A-42225-0062
10	22-28-3101	A-42225-0045	28	22-28-3281	A-42225-0063
11	22-28-3111	A-42225-0046	29	22-28-3291	A-42225-0064
12	22-28-3121	A-42225-0047	30	22-28-3301	A-42225-0065
13	22-28-3131	A-42225-0048	31	22-28-3311	A-42225-0066
14	22-28-3141	A-42225-0049	32	22-28-3321	A-42225-0067
15	22-28-3151	A-42225-0050	33	22-28-3331	A-42225-0068
16	22-28-3161	A-42225-0051	34	22-28-3341	A-42225-0069
17	22-28-3171	A-42225-0052	35	22-28-3351	A-42225-0070
18	22-28-3181	A-42225-0053	36	22-28-3361	A-42225-0071
19	22-28-3191	A-42225-0054			

REV:		TITLE:	SHEET No.
K		.100 POLARIZING BREAKAWAY HEADER ASSY.	**- 2 -**

DOCUMENT NUMBER:	CREATED / REVISED BY:	CHECKED BY:	APPROVED BY:
SD- 42225 -001	**S. LINEHAN 03/04/2004**	**K.SAMIEC 03/04/2004**	**Y. MARGULIS 03/04/2004**

A-42225-0072/0106	
HEADER NUMBER:	41410
PIN NUMBER:	42663-AXB228
PIN LENGTH: L	.540/13.72
MATING LENGTH: M	.295/7.49
GOLD POINT: G	.140/3.56
PC TAIL LENGTH: P	.120/3.05
TIN: T	.100/2.54
CKTS:	2-36
KINKS:	NO
REMOVED BACKWALLS:	NO
VOIDED CKTS:	NONE
PACKAGING:	BULK 40873-0056

CKTS	MATERIAL NUMBER	ENG NUMBER	CKTS	MATERIAL NUMBER	ENG NUMBER
02	22-28-3022	A-42225-0072	20	22-28-3202	A-42225-0090
03	22-28-3032	A-42225-0073	21	22-28-3212	A-42225-0091
04	22-28-3042	A-42225-0074	22	22-28-3222	A-42225-0092
05	22-28-3052	A-42225-0075	23	22-28-3232	A-42225-0093
06	22-28-3062	A-42225-0076	24	22-28-3242	A-42225-0094
07	22-28-3072	A-42225-0077	25	22-28-3252	A-42225-0095
08	22-28-3082	A-42225-0078	26	22-28-3262	A-42225-0096
09	22-28-3092	A-42225-0079	27	22-28-3272	A-42225-0097
10	22-28-3102	A-42225-0080	28	22-28-3282	A-42225-0098
11	22-28-3112	A-42225-0081	29	22-28-3292	A-42225-0099
12	22-28-3122	A-42225-0082	30	22-28-3302	A-42225-0100
13	22-28-3132	A-42225-0083	31	22-28-3312	A-42225-0101
14	22-28-3142	A-42225-0084	32	22-28-3322	A-42225-0102
15	22-28-3152	A-42225-0085	33	22-28-3332	A-42225-0103
16	22-28-3162	A-42225-0086	34	22-28-3342	A-42225-0104
17	22-28-3172	A-42225-0087	35	22-28-3352	A-42225-0105
18	22-28-3182	A-42225-0088	36	22-28-3362	A-42225-0106
19	22-28-3192	A-42225-0089			

A-42225-0107/0141	
HEADER NUMBER:	41410
PIN NUMBER:	42663-BAA154
PIN LENGTH: L	.555/14.10
MATING LENGTH: M	.295/7.49
GOLD POINT: G	N/A
PC TAIL LENGTH: P	.135/3.43
TIN: T	OVERALL
CKTS:	2-36
KINKS:	YES
REMOVED BACKWALLS:	NO
VOIDED CKTS:	NONE
PACKAGING:	BULK 40873-0056

CKTS	MATERIAL NUMBER	ENG NUMBER	CKTS	MATERIAL NUMBER	ENG NUMBER
02	22-28-3023	A-42225-0107	20	22-28-3203	A-42225-0125
03	22-28-3033	A-42225-0108	21	22-28-3213	A-42225-0126
04	22-28-3043	A-42225-0109	22	22-28-3223	A-42225-0127
05	22-28-3053	A-42225-0110	23	22-28-3233	A-42225-0128
06	22-28-3063	A-42225-0111	24	22-28-3243	A-42225-0129
07	22-28-3073	A-42225-0112	25	22-28-3253	A-42225-0130
08	22-28-3083	A-42225-0113	26	22-28-3263	A-42225-0131
09	22-28-3093	A-42225-0114	27	22-28-3273	A-42225-0132
10	22-28-3103	A-42225-0115	28	22-28-3283	A-42225-0133
11	22-28-3113	A-42225-0116	29	22-28-3293	A-42225-0134
12	22-28-3123	A-42225-0117	30	22-28-3303	A-42225-0135
13	22-28-3133	A-42225-0118	31	22-28-3313	A-42225-0136
14	22-28-3143	A-42225-0119	32	22-28-3323	A-42225-0137
15	22-28-3153	A-42225-0120	33	22-28-3333	A-42225-0138
16	22-28-3163	A-42225-0121	34	22-28-3343	A-42225-0139
17	22-28-3173	A-42225-0122	35	22-28-3353	A-42225-0140
18	22-28-3183	A-42225-0123	36	22-28-3363	A-42225-0141
19	22-28-3193	A-42225-0124			

REV:		TITLE:	SHEET No.
K		.100 POLARIZING BREAKAWAY HEADER ASSY.	**- 3 -**

DOCUMENT NUMBER:	CREATED / REVISED BY:	CHECKED BY:	APPROVED BY:
SD- 42225 -001	**S. LINEHAN 03/04/2004**	**K.SAMIEC 03/04/2004**	**Y. MARGULIS 03/04/2004**

A-42225-0142/0176	
HEADER NUMBER:	41410
PIN NUMBER:	42663-BAB208
PIN LENGTH: L	.555/14.10
MATING LENGTH: M	.295/7.49
GOLD POINT: G	.140/3.56
PC TAIL LENGTH: P	.135/3.43
TIN: T	.100/2.54
CKTS:	2-36
KINKS:	YES
REMOVED BACKWALLS:	NO
VOIDED CKTS:	NONE
PACKAGING:	BULK 40873-0056

CKTS	MATERIAL NUMBER	ENG NUMBER	CKTS	MATERIAL NUMBER	ENG NUMBER
02	22-28-3024	A-42225-0142	20	22-28-3204	A-42225-0160
03	22-28-3034	A-42225-0143	21	22-28-3214	A-42225-0161
04	22-28-3044	A-42225-0144	22	22-28-3224	A-42225-0162
05	22-28-3054	A-42225-0145	23	22-28-3234	A-42225-0163
06	22-28-3064	A-42225-0146	24	22-28-3244	A-42225-0164
07	22-28-3074	A-42225-0147	25	22-28-3254	A-42225-0165
08	22-28-3084	A-42225-0148	26	22-28-3264	A-42225-0166
09	22-28-3094	A-42225-0149	27	22-28-3274	A-42225-0167
10	22-28-3104	A-42225-0150	28	22-28-3284	A-42225-0168
11	22-28-3114	A-42225-0151	29	22-28-3294	A-42225-0169
12	22-28-3124	A-42225-0152	30	22-28-3304	A-42225-0170
13	22-28-3134	A-42225-0153	31	22-28-3314	A-42225-0171
14	22-28-3144	A-42225-0154	32	22-28-3324	A-42225-0172
15	22-28-3154	A-42225-0155	33	22-28-3334	A-42225-0173
16	22-28-3164	A-42225-0156	34	22-28-3344	A-42225-0174
17	22-28-3174	A-42225-0157	35	22-28-3354	A-42225-0175
18	22-28-3184	A-42225-0158	36	22-28-3364	A-42225-0176
19	22-28-3194	A-42225-0159			

A-42225-0177/0211	
HEADER NUMBER:	41410
PIN NUMBER:	42663-BAB228
PIN LENGTH: L	.555/14.10
MATING LENGTH: M	.295/7.49
GOLD POINT: G	.140/3.56
PC TAIL LENGTH: P	.135/3.43
TIN: T	.100/2.54
CKTS:	2-36
KINKS:	YES
REMOVED BACKWALLS:	NO
VOIDED CKTS:	NONE
PACKAGING:	BULK 40873-0056

CKTS	MATERIAL NUMBER	ENG NUMBER	CKTS	MATERIAL NUMBER	ENG NUMBER
02	22-28-3025	A-42225-0177	20	22-28-3205	A-42225-0195
03	22-28-3035	A-42225-0178	21	22-28-3215	A-42225-0196
04	22-28-3045	A-42225-0179	22	22-28-3225	A-42225-0197
05	22-28-3055	A-42225-0180	23	22-28-3235	A-42225-0198
06	22-28-3065	A-42225-0181	24	22-28-3245	A-42225-0199
07	22-28-3075	A-42225-0182	25	22-28-3255	A-42225-0200
08	22-28-3085	A-42225-0183	26	22-28-3265	A-42225-0201
09	22-28-3095	A-42225-0184	27	22-28-3275	A-42225-0202
10	22-28-3105	A-42225-0185	28	22-28-3285	A-42225-0203
11	22-28-3115	A-42225-0186	29	22-28-3295	A-42225-0204
12	22-28-3125	A-42225-0187	30	22-28-3305	A-42225-0205
13	22-28-3135	A-42225-0188	31	22-28-3315	A-42225-0206
14	22-28-3145	A-42225-0189	32	22-28-3325	A-42225-0207
15	22-28-3155	A-42225-0190	33	22-28-3335	A-42225-0208
16	22-28-3165	A-42225-0191	34	22-28-3345	A-42225-0209
17	22-28-3175	A-42225-0192	35	22-28-3355	A-42225-0210
18	22-28-3185	A-42225-0193	36	22-28-3365	A-42225-0211
19	22-28-3195	A-42225-0194			

REV:		TITLE:	SHEET No.
K		.100 POLARIZING BREAKAWAY HEADER ASSY.	**- 4 -**

DOCUMENT NUMBER:	CREATED / REVISED BY:	CHECKED BY:	APPROVED BY:
SD- 42225 -001	**S. LINEHAN 03/04/2004**	**K.SAMIEC 03/04/2004**	**Y. MARGULIS 03/04/2004**

A-42225-0213/0246	
HEADER NUMBER:	41410
PIN NUMBER:	42663-AXA154
PIN LENGTH: L	.540/13.72
MATING LENGTH: M	.295/7.49
GOLD POINT: G	N/A
PC TAIL LENGTH: P	.120/3.05
TIN: T	OVERALL
CKTS:	3-36
KINKS:	NO
REMOVED BACKWALLS:	YES
VOIDED CKTS:	NONE
PACKAGING:	BULK 40873-0056

CKTS	MATERIAL NUMBER	ENG NUMBER	CKTS	MATERIAL NUMBER	ENG NUMBER
02			20	22-28-3206	A-42225-0230
03	22-28-3036	A-42225-0213	21	22-28-3216	A-42225-0231
04	22-28-3046	A-42225-0214	22	22-28-3226	A-42225-0232
05	22-28-3056	A-42225-0215	23	22-28-3236	A-42225-0233
06	22-28-3066	A-42225-0216	24	22-28-3246	A-42225-0234
07	22-28-3076	A-42225-0217	25	22-28-3256	A-42225-0235
08	22-28-3086	A-42225-0218	26	22-28-3266	A-42225-0236
09	22-28-3096	A-42225-0219	27	22-28-3276	A-42225-0237
10	22-28-3106	A-42225-0220	28	22-28-3286	A-42225-0238
11	22-28-3116	A-42225-0221	29	22-28-3296	A-42225-0239
12	22-28-3126	A-42225-0222	30	22-28-3306	A-42225-0240
13	22-28-3136	A-42225-0223	31	22-28-3316	A-42225-0241
14	22-28-3146	A-42225-0224	32	22-28-3326	A-42225-0242
15	22-28-3156	A-42225-0225	33	22-28-3336	A-42225-0243
16	22-28-3166	A-42225-0226	34	22-28-3346	A-42225-0244
17	22-28-3176	A-42225-0227	35	22-28-3356	A-42225-0245
18	22-28-3186	A-42225-0228	36	22-28-3366	A-42225-0246
19	22-28-3196	A-42225-0229			

A-42225-0248/0281	
HEADER NUMBER:	41410
PIN NUMBER:	42663-AXB208
PIN LENGTH: L	.540/13.72
MATING LENGTH: M	.295/7.49
GOLD POINT: G	.140/3.56
PC TAIL LENGTH: P	.120/3.05
TIN: T	.135/3.43
CKTS:	3-36
KINKS:	NO
REMOVED BACKWALLS:	YES
VOIDED CKTS:	NONE
PACKAGING:	BULK 40873-0056

CKTS	MATERIAL NUMBER	ENG NUMBER	CKTS	MATERIAL NUMBER	ENG NUMBER
02			20	22-28-3207	A-42225-0265
03	22-28-3037	A-42225-0248	21	22-28-3217	A-42225-0266
04	22-28-3047	A-42225-0249	22	22-28-3227	A-42225-0267
05	22-28-3057	A-42225-0250	23	22-28-3237	A-42225-0268
06	22-28-3067	A-42225-0251	24	22-28-3247	A-42225-0269
07	22-28-3077	A-42225-0252	25	22-28-3257	A-42225-0270
08	22-28-3087	A-42225-0253	26	22-28-3267	A-42225-0271
09	22-28-3097	A-42225-0254	27	22-28-3277	A-42225-0272
10	22-28-3107	A-42225-0255	28	22-28-3287	A-42225-0273
11	22-28-3117	A-42225-0256	29	22-28-3297	A-42225-0274
12	22-28-3127	A-42225-0257	30	22-28-3307	A-42225-0275
13	22-28-3137	A-42225-0258	31	22-28-3317	A-42225-0276
14	22-28-3147	A-42225-0259	32	22-28-3327	A-42225-0277
15	22-28-3157	A-42225-0260	33	22-28-3337	A-42225-0278
16	22-28-3167	A-42225-0261	34	22-28-3347	A-42225-0279
17	22-28-3177	A-42225-0262	35	22-28-3357	A-42225-0280
18	22-28-3187	A-42225-0263	36	22-28-3367	A-42225-0281
19	22-28-3197	A-42225-0264			

REV:		TITLE:	SHEET No.
K		.100 POLARIZING BREAKAWAY HEADER ASSY.	**- 5 -**

DOCUMENT NUMBER:	CREATED / REVISED BY:	CHECKED BY:	APPROVED BY:
SD- 42225 -001	**S. LINEHAN 03/04/2004**	**K.SAMIEC 03/04/2004**	**Y. MARGULIS 03/04/2004**

A-42225-0282/0316	
HEADER NUMBER:	41410
PIN NUMBER:	42663-AXB228
PIN LENGTH: L	.540/13.72
MATING LENGTH: M	.295/7.49
GOLD POINT: G	.140/3.56
PC TAIL LENGTH: P	.120/3.05
TIN: T	.135/3.43
CKTS:	3-36
KINKS:	NO
REMOVED BACKWALLS:	YES
VOIDED CKTS:	NONE
PACKAGING:	BULK 40873-0056

CKTS	MATERIAL NUMBER	ENG NUMBER	CKTS	MATERIAL NUMBER	ENG NUMBER
02			20	22-28-3208	A-42225-0300
03	22-28-3038	A-42225-0283	21	22-28-3218	A-42225-0301
04	22-28-3048	A-42225-0284	22	22-28-3228	A-42225-0302
05	22-28-3058	A-42225-0285	23	22-28-3238	A-42225-0303
06	22-28-3068	A-42225-0286	24	22-28-3248	A-42225-0304
07	22-28-3078	A-42225-0287	25	22-28-3258	A-42225-0305
08	22-28-3088	A-42225-0288	26	22-28-3268	A-42225-0306
09	22-28-3098	A-42225-0289	27	22-28-3278	A-42225-0307
10	22-28-3108	A-42225-0290	28	22-28-3288	A-42225-0308
11	22-28-3118	A-42225-0291	29	22-28-3298	A-42225-0309
12	22-28-3128	A-42225-0292	30	22-28-3308	A-42225-0310
13	22-28-3138	A-42225-0293	31	22-28-3318	A-42225-0311
14	22-28-3148	A-42225-0294	32	22-28-3328	A-42225-0312
15	22-28-3158	A-42225-0295	33	22-28-3338	A-42225-0313
16	22-28-3168	A-42225-0296	34	22-28-3348	A-42225-0314
17	22-28-3178	A-42225-0297	35	22-28-3358	A-42225-0315
18	22-28-3188	A-42225-0298	36	22-28-3368	A-42225-0316
19	22-28-3198	A-42225-0299			

A-42225-0488/0518	
HEADER NUMBER:	41410
PIN NUMBER:	42663-AXA154
PIN LENGTH: L	.540/13.72
MATING LENGTH: M	.295/7.49
GOLD POINT: G	N/A
PC TAIL LENGTH: P	.120/3.05
TIN: T	OVERALL
CKTS:	6-36
KINKS:	NO
REMOVED BACKWALLS:	NO
VOIDED CKTS:	6
PACKAGING:	BULK 40873-0056

CKTS	MATERIAL NUMBER	ENG NUMBER	CKTS	MATERIAL NUMBER	ENG NUMBER
02			20	42225-0502	A-42225-0502
03			21	42225-0503	A-42225-0503
04			22	42225-0504	A-42225-0504
05			23	42225-0505	A-42225-0505
06	42225-0488	A-42225-0488	24	42225-0506	A-42225-0506
07	42225-0489	A-42225-0489	25	42225-0507	A-42225-0507
08	42225-0490	A-42225-0490	26	42225-0508	A-42225-0508
09	42225-0491	A-42225-0491	27	42225-0509	A-42225-0509
10	42225-0492	A-42225-0492	28	42225-0510	A-42225-0510
11	42225-0493	A-42225-0493	29	42225-0511	A-42225-0511
12	42225-0494	A-42225-0494	30	42225-0512	A-42225-0512
13	42225-0495	A-42225-0495	31	42225-0513	A-42225-0513
14	42225-0496	A-42225-0496	32	42225-0514	A-42225-0514
15	42225-0497	A-42225-0497	33	42225-0515	A-42225-0515
16	42225-0498	A-42225-0498	34	42225-0516	A-42225-0516
17	42225-0499	A-42225-0499	35	42225-0517	A-42225-0517
18	42225-0500	A-42225-0500	36	42225-0518	A-42225-0518
19	42225-0501	A-42225-0501			

REV:		TITLE:	SHEET No.
K		.100 POLARIZING BREAKAWAY HEADER ASSY.	**- 6 -**

DOCUMENT NUMBER:	CREATED / REVISED BY:	CHECKED BY:	APPROVED BY:
SD- 42225 -001	**S. LINEHAN 03/04/2004**	**K.SAMIEC 03/04/2004**	**Y. MARGULIS 03/04/2004**