THIS DRAWING IS UNPUBLISHED. RELEASED FOR PUBLICATION
© COPYRIGHT copyright_dBYe- ALL RIGHTS RESERVED.

REVISIONS

P	LTR	DESCRIPTION	DATE	DWN	APVD
	A	RELEASE	03NOV2016	JY	SH

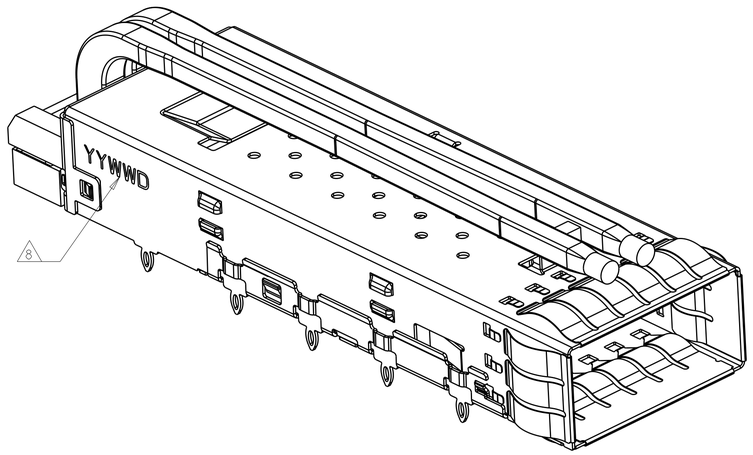

2170773-1 AS SHOWN
SCALE 4:1

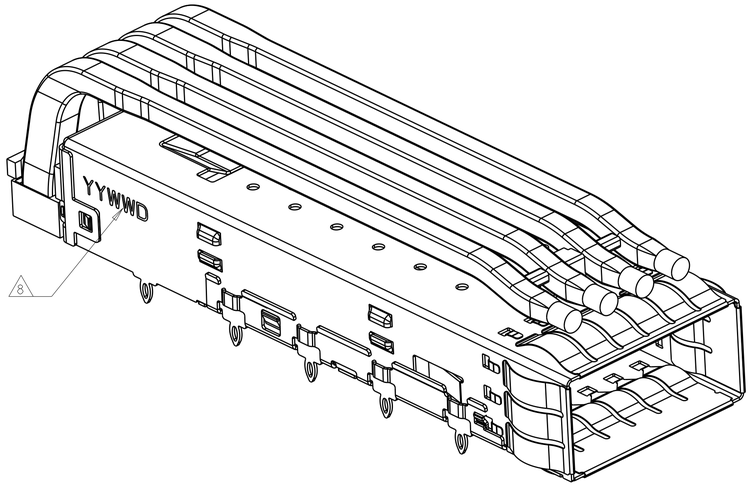

2170773-4 AS SHOWN
SCALE 4:1

1. MATERIAL:
   CAGE MATERIAL : 0.25 THICK NICKEL SILVER.
   SPRING MATERIAL: COPPER ALLOY
   LIGHT PIPE MATERIAL: POLYCARBONATE WITH 94 V-0
   ORGANIZER MATERIAL: POLYESTER WITH 94 V-0

2. FINISH:
   SPRING: NICKEL PLATING

3. DIMENSION APPLIES WITH MODULE INSTALLED IN THE CAGE TO TOP OF HEAT SINK.

4. REFERENCE APPLICATION SPEC 114-32023 FOR RECOMMENDED DRILL HOLE DIAMETER AND PLATING THICKNESS.

5. DATUM AND BASIC DIMENSIONS ESTABLISHED BY CUSTOMERS.

6. MINIMUM PC BOARD THICKNESS : SINGLE SIDED: 1.57 MIN
   DOUBLE SIDED: 2.20 MIN

7. DATUM -A- IS TOP SURFACE OF THE HOST BOARD.

8. DATE CODE (YYWWD) MARKED APPROXIMATELY AS SHOWN

9. MATES WITH QSFP28 MSA COMPATIBLE TRANSCEIVER.

10. THESE HOLES ARE OPTIONAL WHEN THE REAR PINS ARE REMOVED.

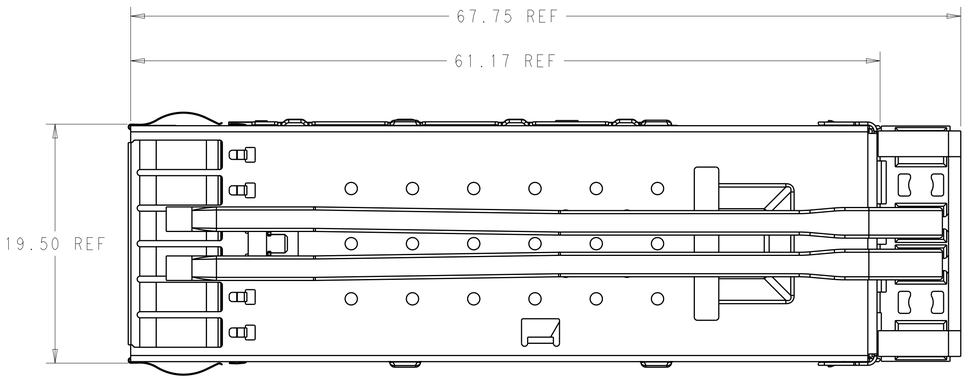

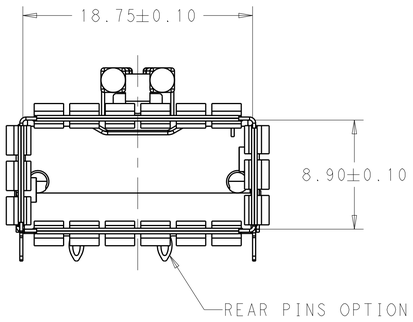

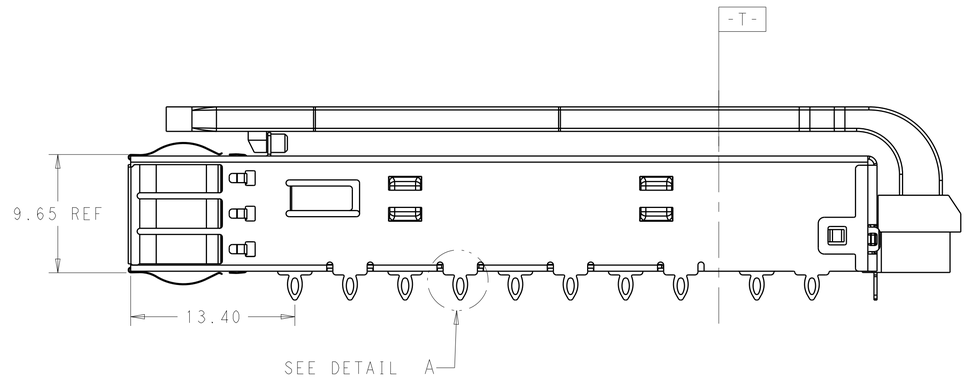

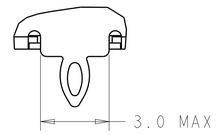

DETAIL A
SCALE 8:1

LIGHT PIPE OPTION	# OF REAR PINS OPTION	PART NUMBER
SINGLE	0	2170773-7
QUAD	0	2170773-6
QUAD	1	2170773-5
QUAD	2	2170773-4
DUAL	0	2170773-3
DUAL	1	2170773-2
DUAL	2	2170773-1

THIS DRAWING IS A CONTROLLED DOCUMENT.

DIMENSIONS: mm

TOLERANCES UNLESS OTHERWISE SPECIFIED:
0 PLC ±0.25
1 PLC ±0.25
2 PLC ±0.20
3 PLC ±0.100
4 PLC ±-
ANGLES ±-

MATERIAL -
FINISH -

DWN JASON YANG 23SEP2013
CHK SEAN HAN 23SEP2013
APVD 23SEP2013
PRODUCT SPEC 108-19428
APPLICATION SPEC 114-32023
WEIGHT -

TE Connectivity

NAME CAGE ASSEMBLY, QSFP28, THRU BEZEL WITH EMI SPRING FINGER LIGHT PIPE

SIZE A1 | CAGE CODE 00779 | DRAWING NO C-2170773 | RESTRICTED TO -

CUSTOMER DRAWING | SCALE 2:1 | SHEET 1 OF 7 | REV A

4805 (3/13)

THIS DRAWING IS UNPUBLISHED. RELEASED FOR PUBLICATION -
© COPYRIGHT copyright_date - ALL RIGHTS RESERVED.

REVISIONS

P	LTR	DESCRIPTION	DATE	DWN	APVD
	-	SEE SHEET 1	-	-	-

OF REAR LEGS OPTION

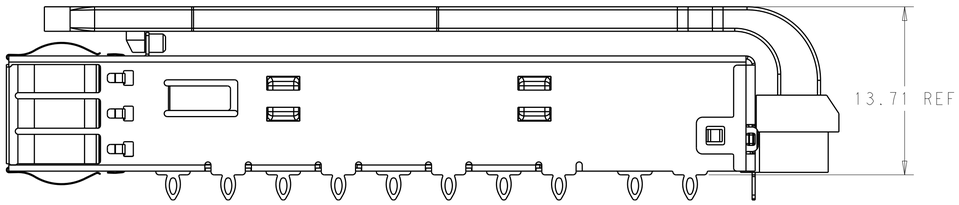

PN: 2170773-1/2/3

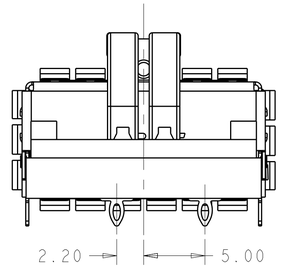

BACK VIEW OF 2170773-1
SCALE 4:1

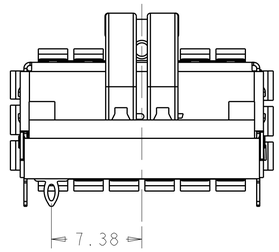

BACK VIEW OF 2170773-2
SCALE 4:1

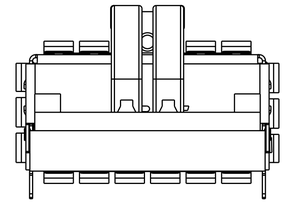

BACK VIEW OF 2170773-3
SCALE 4:1

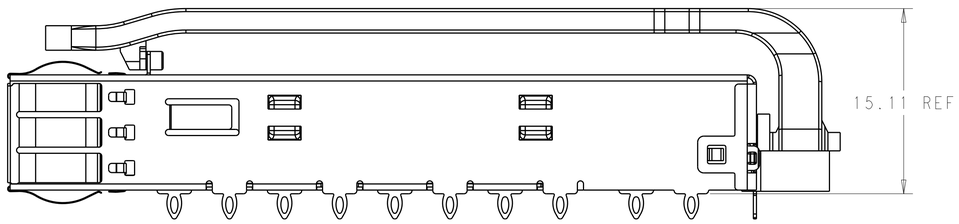

PN: 2170773-4/5/6

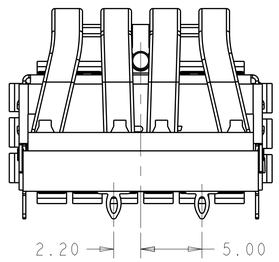

BACK VIEW OF 2170773-4
SCALE 4:1

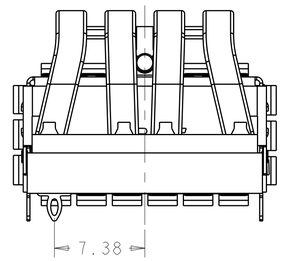

BACK VIEW OF 2170773-5
SCALE 4:1

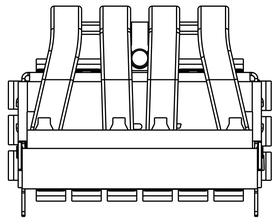

BACK VIEW OF 2170773-6
SCALE 4:1

THIS DRAWING IS A CONTROLLED DOCUMENT.

DIMENSIONS: mm

TOLERANCES UNLESS OTHERWISE SPECIFIED:
0 PLC ±0.25
1 PLC ±0.25
2 PLC ±0.20
3 PLC ±0.100
4 PLC ±'
ANGLES ±'

MATERIAL -
FINISH -

DWN JASON YANG 23SEP2013
CHK SEAN HAN 23SEP2013
APVD 23SEP2013
PRODUCT SPEC 108-19428
APPLICATION SPEC 114-32023
WEIGHT -

TE Connectivity

NAME CAGE ASSEMBLY, QSFP28, THRU BEZEL WITH EMI SPRING FINGER LIGHT PIPE

SIZE	CAGE CODE	DRAWING NO	RESTRICTED TO
A1	00779	C-2170773	-

CUSTOMER DRAWING | SCALE 2:1 | SHEET 2 OF 7 | REV A

THIS DRAWING IS UNPUBLISHED. RELEASED FOR PUBLICATION -
© COPYRIGHT copyright date ALL RIGHTS RESERVED.

REVISIONS

P	LTR	DESCRIPTION	DATE	DWN	APVD
	-	SEE SHEET 1	-	-	-

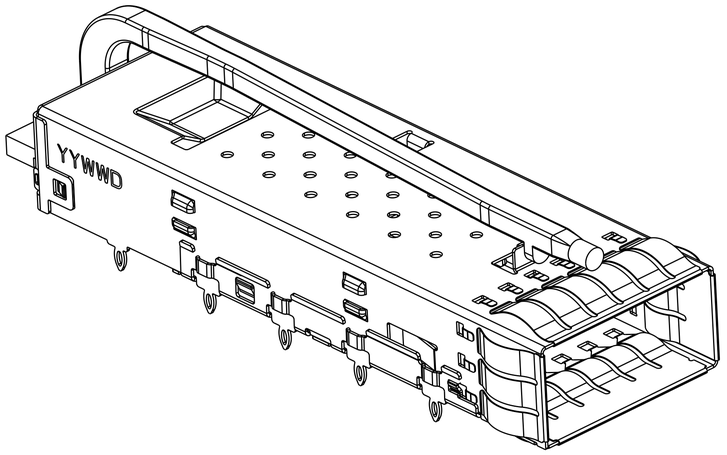

2170773-7 AS SHOWN
SCALE 4:1

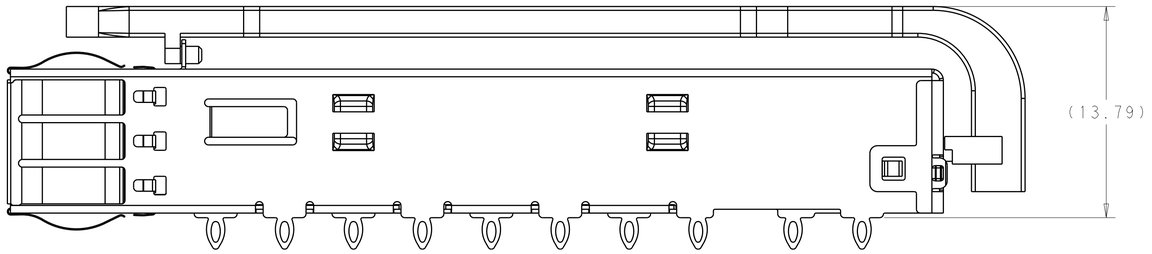

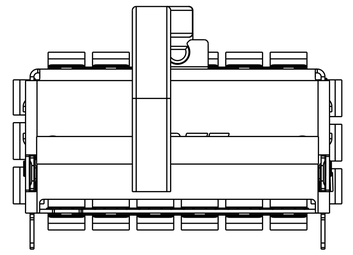

2170773-7 BACK VIEW
SCALE 5:1

THIS DRAWING IS A CONTROLLED DOCUMENT.

DIMENSIONS: mm

TOLERANCES UNLESS OTHERWISE SPECIFIED:
0 PLC ±0.25
1 PLC ±0.25
2 PLC ±0.20
3 PLC ±0.100
4 PLC
ANGLES ±

MATERIAL - -
FINISH - -

DWN JASON YANG 23SEP2013
CHK SEAN HAN 23SEP2013
APVD - 23SEP2013
PRODUCT SPEC 108-19428
APPLICATION SPEC 114-32023
WEIGHT -

TE Connectivity

NAME CAGE ASSEMBLY, QSFP28, THRU BEZEL WITH EMI SPRING FINGER LIGHT PIPE

SIZE	CAGE CODE	DRAWING NO	RESTRICTED TO
A1	00779	C-2170773	-

CUSTOMER DRAWING | SCALE 2:1 | SHEET 3 OF 7 | REV A

THIS DRAWING IS UNPUBLISHED. RELEASED FOR PUBLICATION -
© COPYRIGHT copyright.dgrc- ALL RIGHTS RESERVED.

REVISIONS

P	LTR	DESCRIPTION	DATE	DWN	APVD
	-	SEE SHEET 1	-	-	-

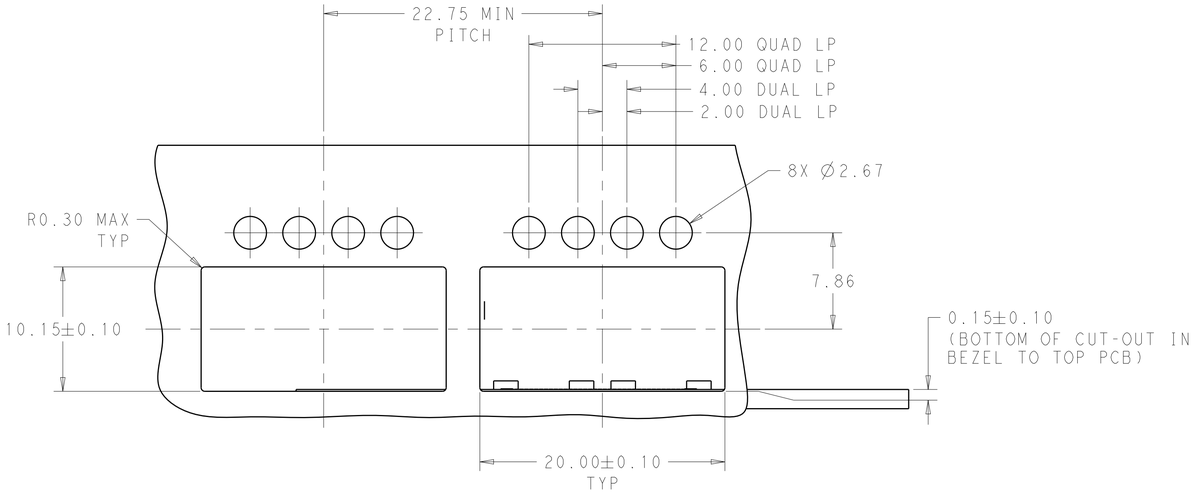

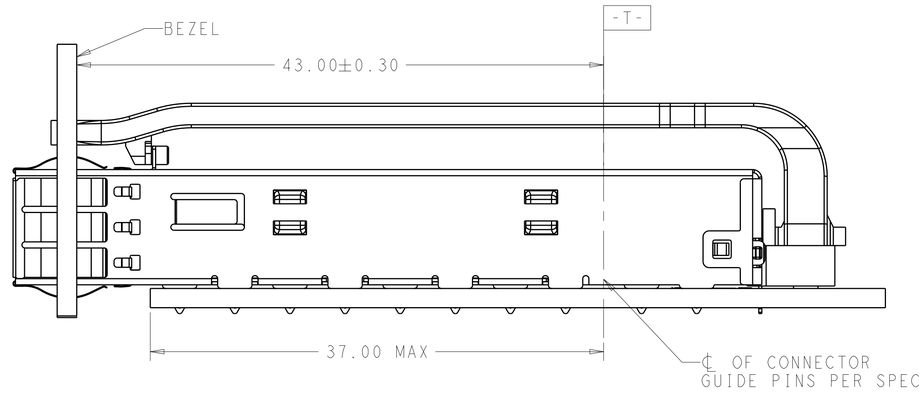

SINGLE SIDE MOUNTING
SCALE 4:1

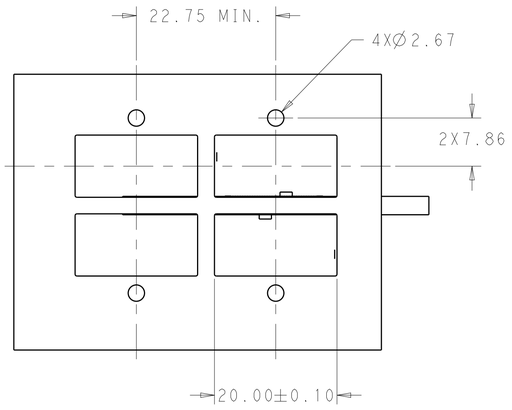

FOR SINGLE LP BELLY TO BELLY APPLICATON
UNDIMENSIONED SPEC SAME TO DUAL LP SHOWN
SCALE 2:1

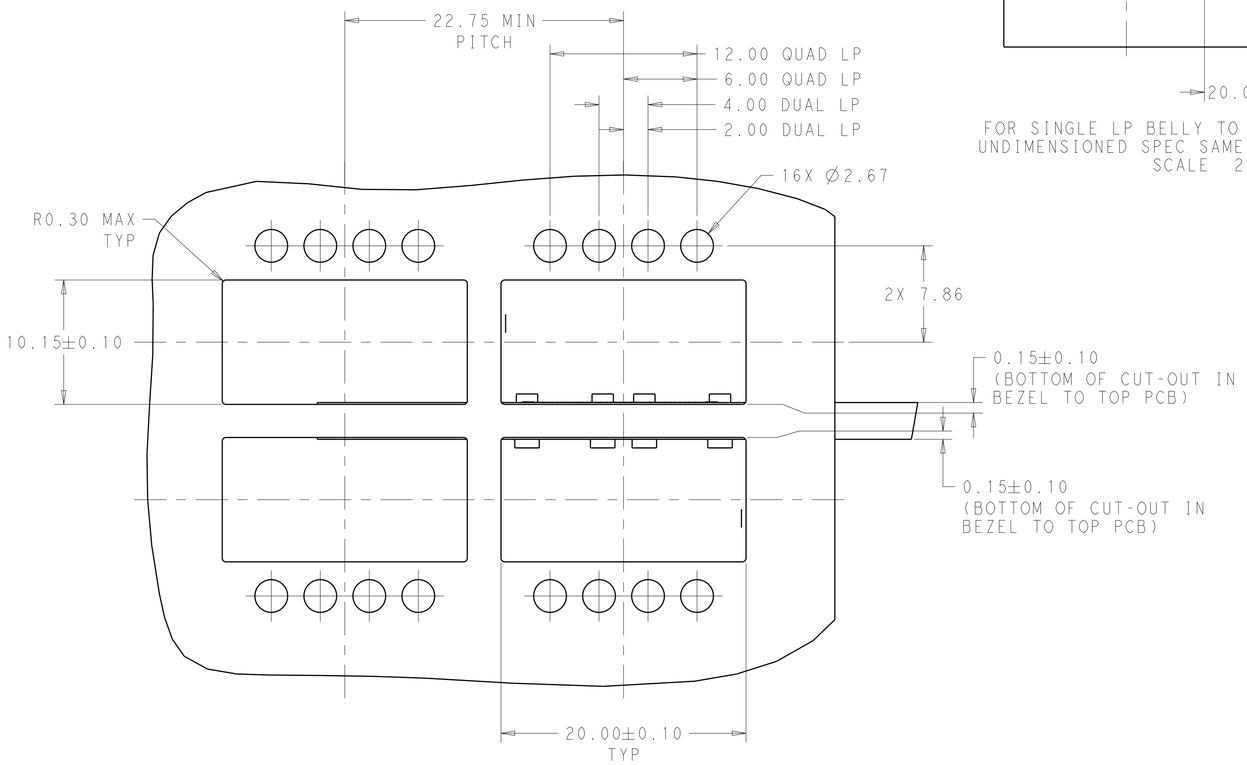

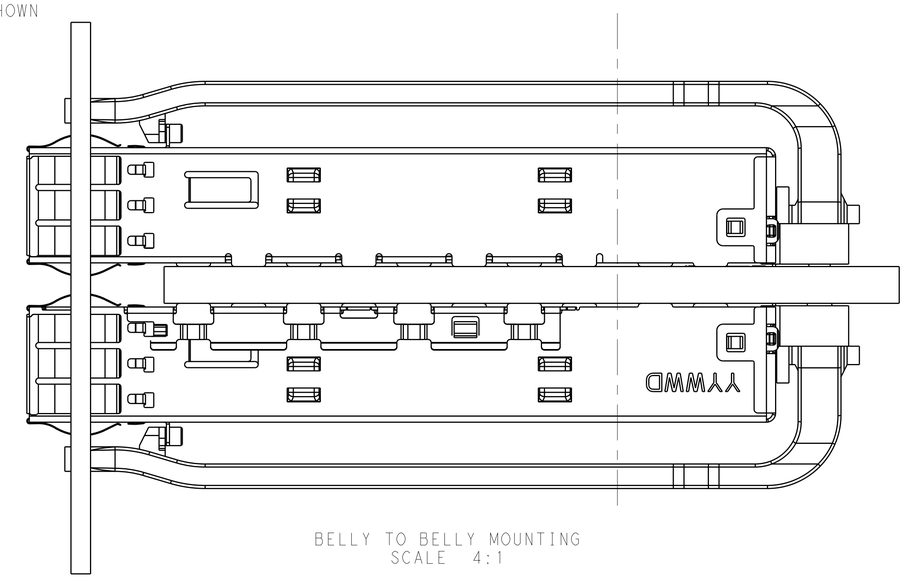

BELLY TO BELLY MOUNTING
SCALE 4:1

THIS DRAWING IS A CONTROLLED DOCUMENT.

DIMENSIONS: mm

TOLERANCES UNLESS OTHERWISE SPECIFIED:
0 PLC ±0.25
1 PLC ±0.25
2 PLC ±0.20
3 PLC ±0.100
4 PLC ±-
ANGLES ±-

MATERIAL -
FINISH -

DWN JASON YANG 23SEP2013
CHK SEAN HAN 23SEP2013
APVD - 23SEP2013
PRODUCT SPEC 108-19428
APPLICATION SPEC 114-32023
WEIGHT -

TE Connectivity

NAME CAGE ASSEMBLY, QSFP28, THRU BEZEL WITH EMI SPRING FINGER LIGHT PIPE

SIZE	CAGE CODE	DRAWING NO	RESTRICTED TO
A1	00779	C-2170773	-

CUSTOMER DRAWING | SCALE 2:1 | SHEET 4 OF 7 | REV A

THIS DRAWING IS UNPUBLISHED. RELEASED FOR PUBLICATION -
© COPYRIGHT copyright.dgrc- ALL RIGHTS RESERVED.

REVISIONS

P	LTR	DESCRIPTION	DATE	DWN	APVD
	-	SEE SHEET 1	-	-	-

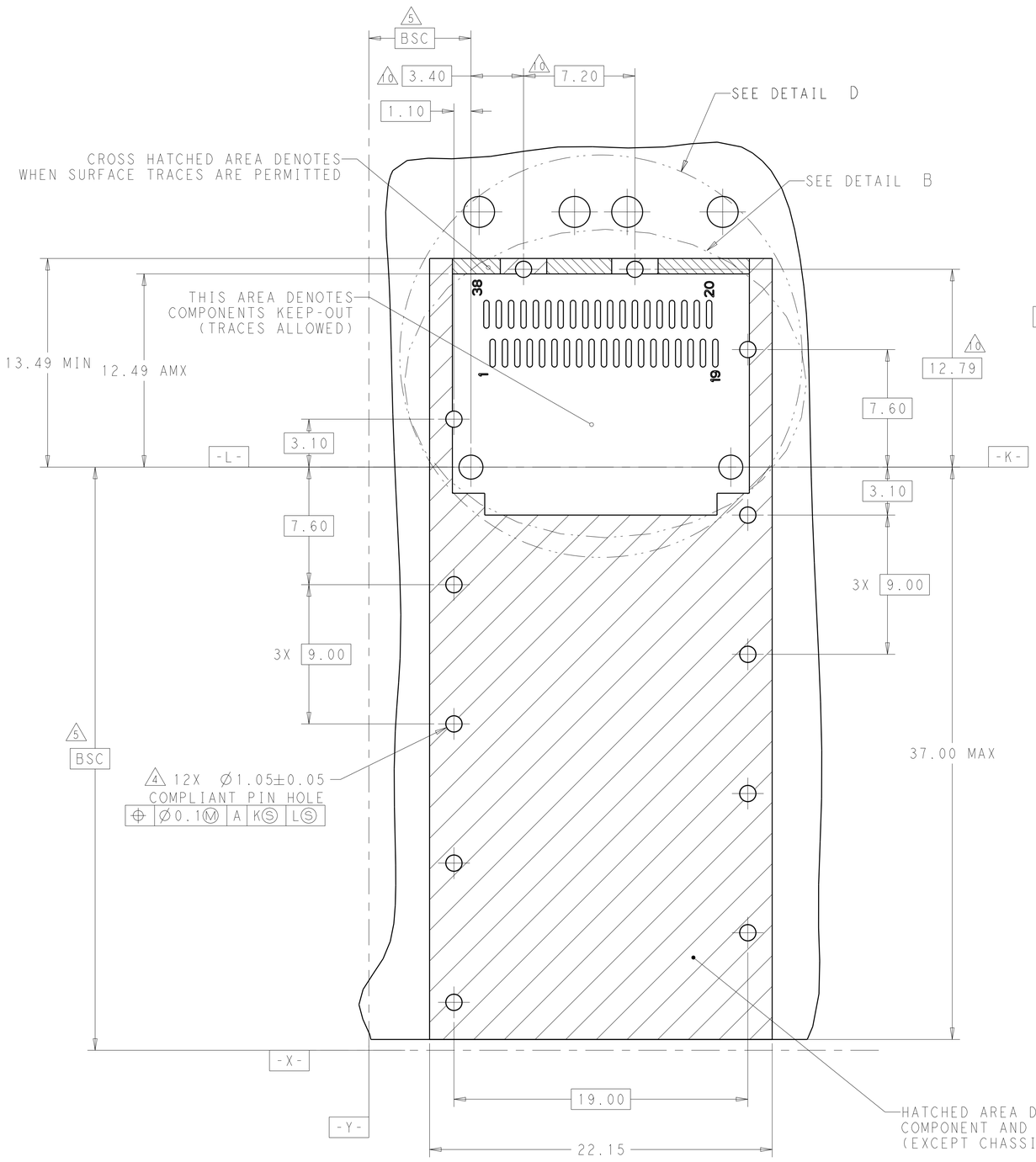

RECOMMENDED PCB LAYOUT
SINGLE TYPE OF 2 REAR HOLES OF LEGS
PCB TOLERANCE: ±0.05
SCALE 6:1

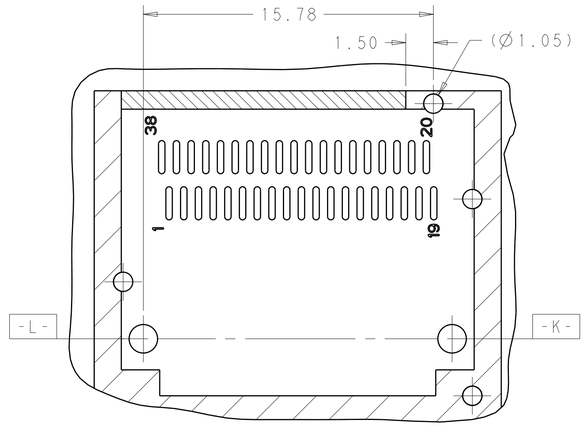

RECOMMENDED PCB LAYOUT
SINGLE TYPE OF 1 REAR HOLES OF LEGS
PCB TOLERANCE: ±0.05
SCALE 6:1

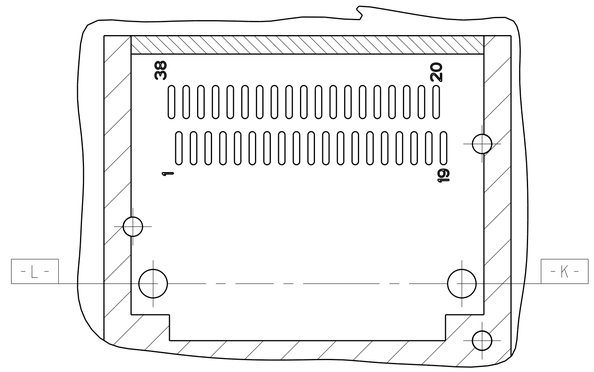

RECOMMENDED PCB LAYOUT
SINGLE TYPE OF 0 REAR HOLES OF LEGS
PCB TOLERANCE: ±0.05
SCALE 6:1

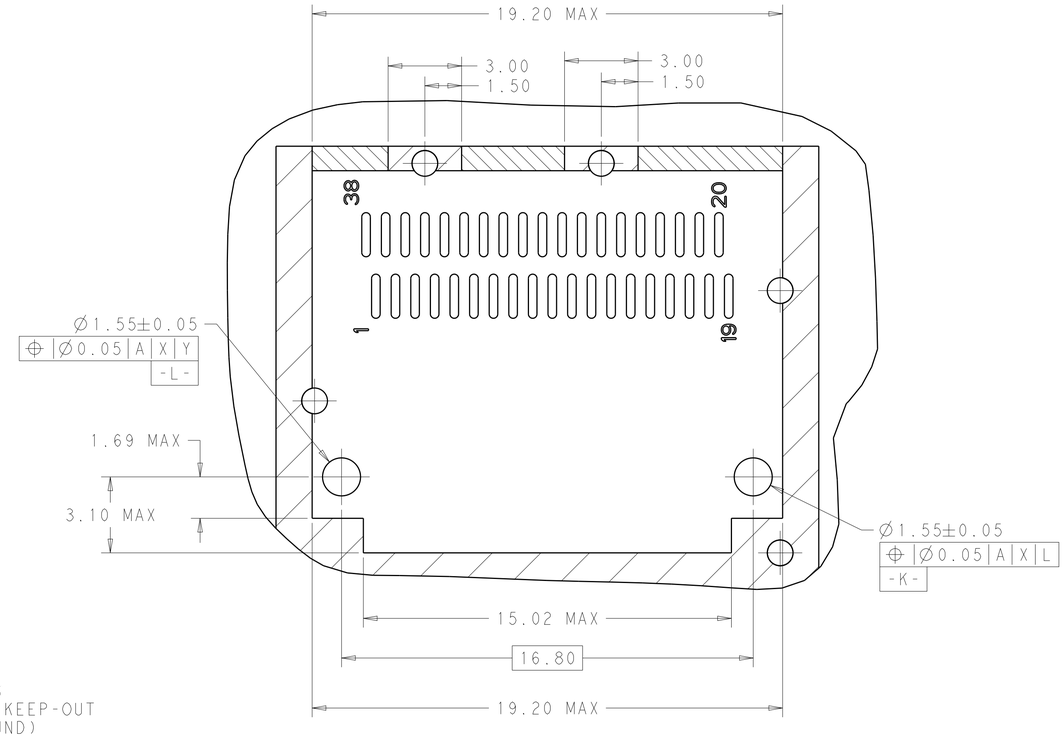

DETAIL B
SCALE 8:1

THIS DRAWING IS A CONTROLLED DOCUMENT.

DIMENSIONS: mm

TOLERANCES UNLESS OTHERWISE SPECIFIED:
0 PLC ±0.25
1 PLC ±0.25
2 PLC ±0.20
3 PLC ±0.100
4 PLC ±
ANGLES ±

MATERIAL -
FINISH -

DWN JASON YANG 23SEP2013
CHK SEAN HAN 23SEP2013
APVD 23SEP2013
PRODUCT SPEC 108-19428
APPLICATION SPEC 114-32023
WEIGHT -

TE Connectivity

NAME CAGE ASSEMBLY, QSFP28, THRU BEZEL WITH EMI SPRING FINGER LIGHT PIPE

SIZE A1 | CAGE CODE 00779 | DRAWING NO C-2170773 | RESTRICTED TO -

CUSTOMER DRAWING | SCALE 2:1 | SHEET 5 OF 7 | REV A

4805 (3/13)

THIS DRAWING IS UNPUBLISHED. RELEASED FOR PUBLICATION -
© COPYRIGHT copyright_date ALL RIGHTS RESERVED.

REVISIONS					
P	LTR	DESCRIPTION	DATE	DWN	APVD
	-	SEE SHEET 1	-	-	-

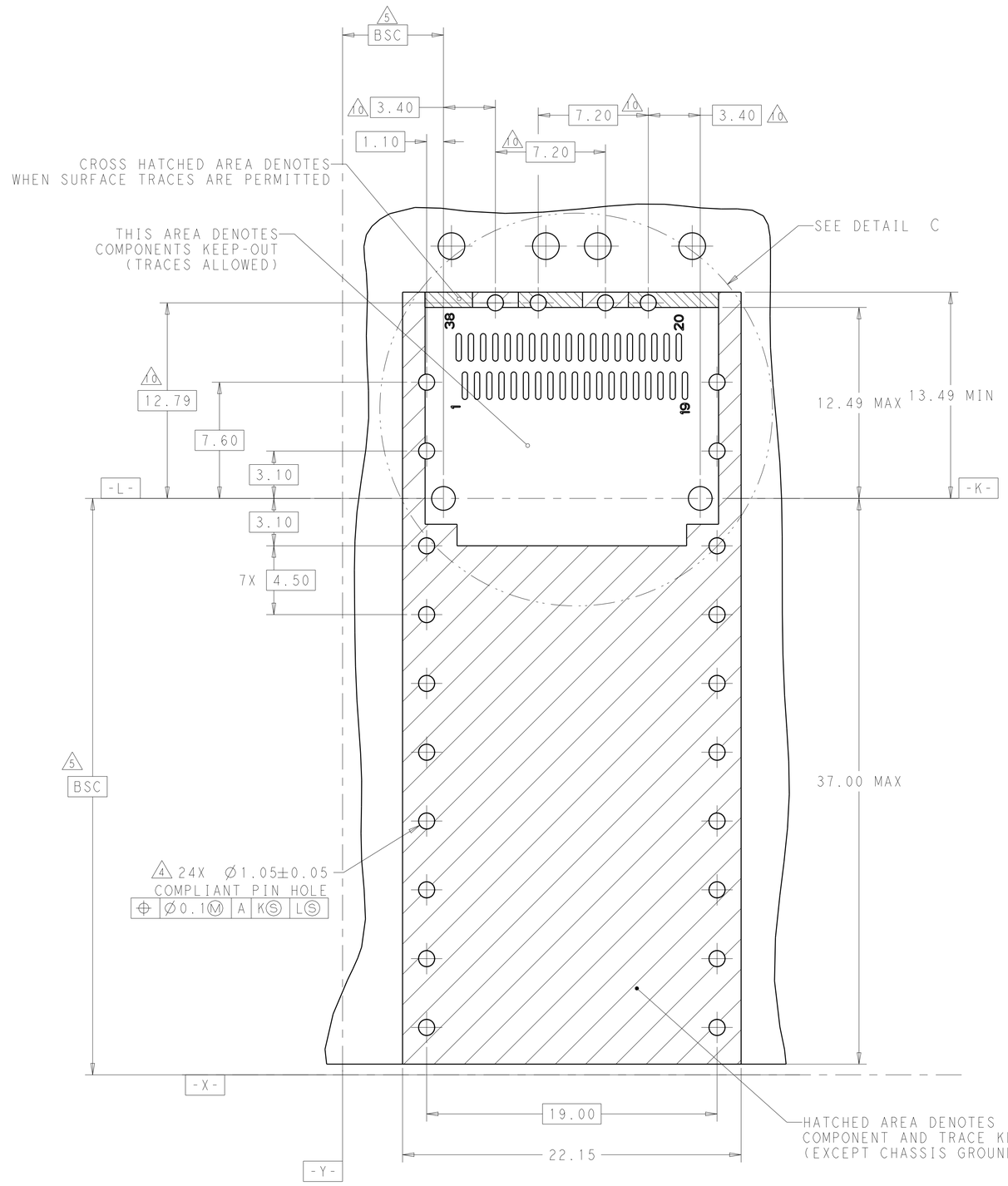

RECOMMENDED PCB LAYOUT
BELLY TO BELLY TYPE OF 2 REAR HOLES OF LEGS
PCB TOLERANCE: ±0.05
SCALE 6:1

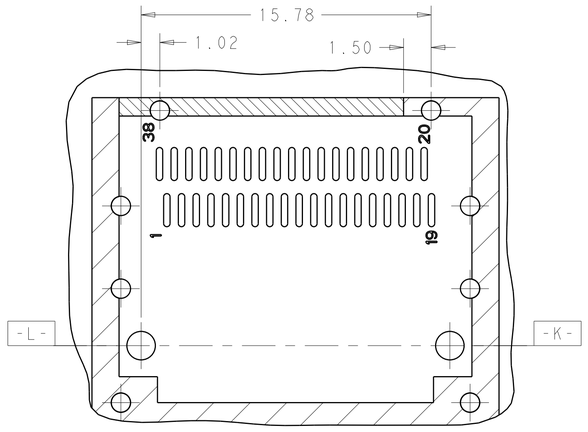

RECOMMENDED PCB LAYOUT
BELLY TO BELLY TYPE OF 1 REAR HOLES OF LEGS
PCB TOLERANCE: ±0.05
SCALE 6:1

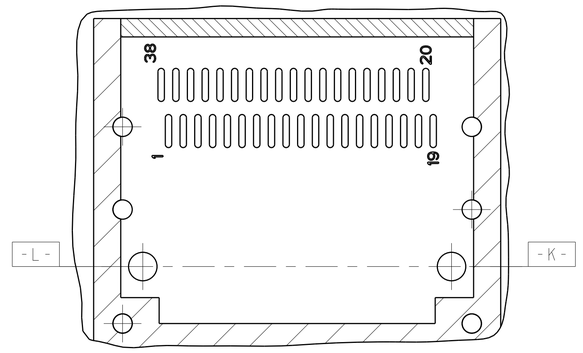

RECOMMENDED PCB LAYOUT
BELLY TO BELLY TYPE OF 0 REAR HOLES OF LEGS
PCB TOLERANCE: ±0.05
SCALE 6:1

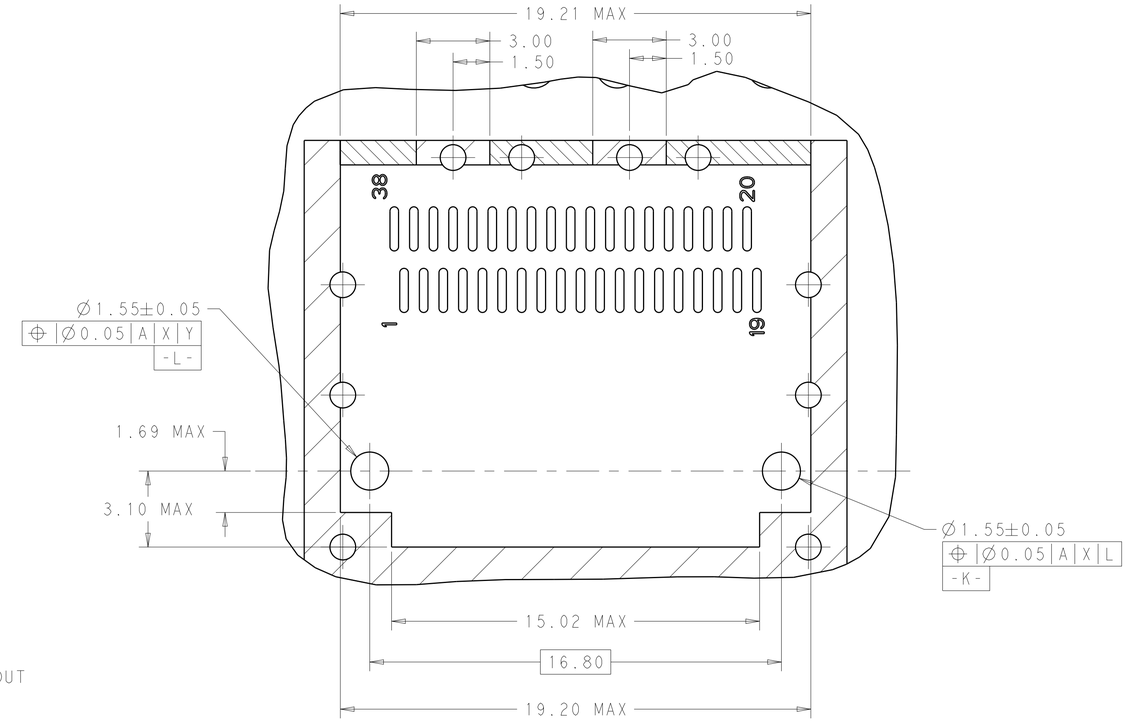

DETAIL C
SCALE 8:1

THIS DRAWING IS A CONTROLLED DOCUMENT.	DWN JASON YANG 23SEP2013	TE Connectivity	
	CHK SEAN HAN 23SEP2013		
DIMENSIONS: mm	APVD - 23SEP2013	NAME CAGE ASSEMBLY, QSFP28, THRU BEZEL WITH EMI SPRING FINGER LIGHT PIPE	
TOLERANCES UNLESS OTHERWISE SPECIFIED: 0 PLC ±0.25; 1 PLC ±0.25; 2 PLC ±0.20; 3 PLC ±0.100; 4 PLC ±; ANGLES ±.	PRODUCT SPEC 108-19428		
	APPLICATION SPEC 114-32023	SIZE A1 / CAGE CODE 00779 / DRAWING NO C-2170773	RESTRICTED TO -
MATERIAL - -	WEIGHT -		
FINISH - -	CUSTOMER DRAWING	SCALE 2:1 / SHEET 6 OF 7	REV A

THIS DRAWING IS UNPUBLISHED. RELEASED FOR PUBLICATION -
© COPYRIGHT copyright_date - ALL RIGHTS RESERVED.

REVISIONS

P	LTR	DESCRIPTION	DATE	DWN	APVD
	-	SEE SHEET 1	-	-	-

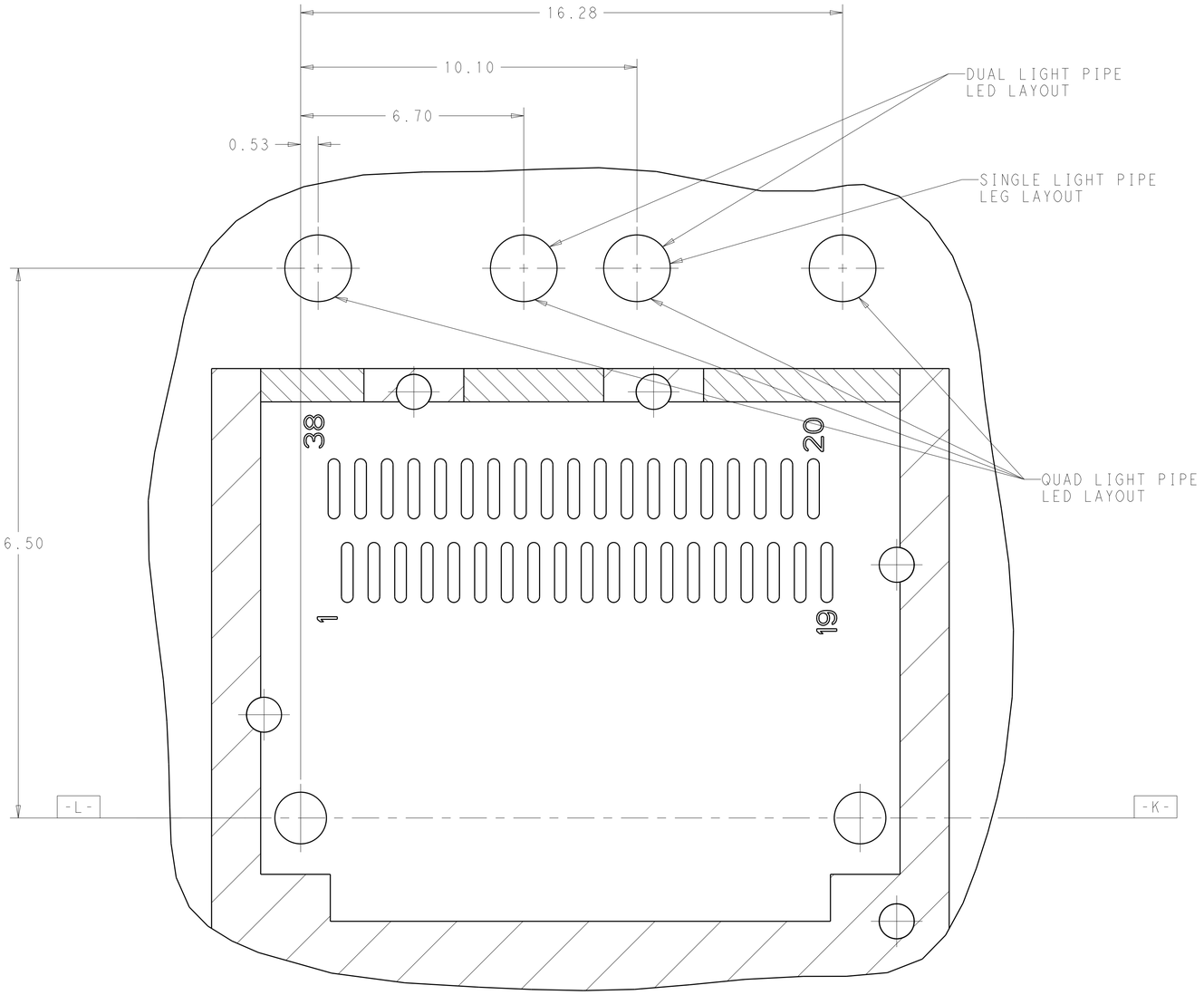

DETAIL D
SCALE 12:1

THIS DRAWING IS A CONTROLLED DOCUMENT.

DIMENSIONS: mm

TOLERANCES UNLESS OTHERWISE SPECIFIED:
0 PLC ±0.25
1 PLC ±0.25
2 PLC ±0.20
3 PLC ±0.100
4 PLC ±.
ANGLES ±.

MATERIAL -
FINISH -

DWN JASON YANG 23SEP2013
CHK SEAN HAN 23SEP2013
APVD 23SEP2013

PRODUCT SPEC 108-19428
APPLICATION SPEC 114-32023
WEIGHT -

TE Connectivity

NAME CAGE ASSEMBLY, QSFP28, THRU BEZEL WITH EMI SPRING FINGER LIGHT PIPE

SIZE	CAGE CODE	DRAWING NO	RESTRICTED TO
A1	00779	C-2170773	-

CUSTOMER DRAWING | SCALE 2:1 | SHEET 7 OF 7 | REV A