THIS DRAWING IS UNPUBLISHED. RELEASED FOR PUBLICATION 20
© COPYRIGHT 20 BY TE CONNECTIVITY ALL RIGHTS RESERVED.

LOC	DIST
-	-

REVISIONS

P	LTR	DESCRIPTION	DATE	DWN	APVD
	A	REVISED PER ECO-12-020971	05DEC2012	KH	PO

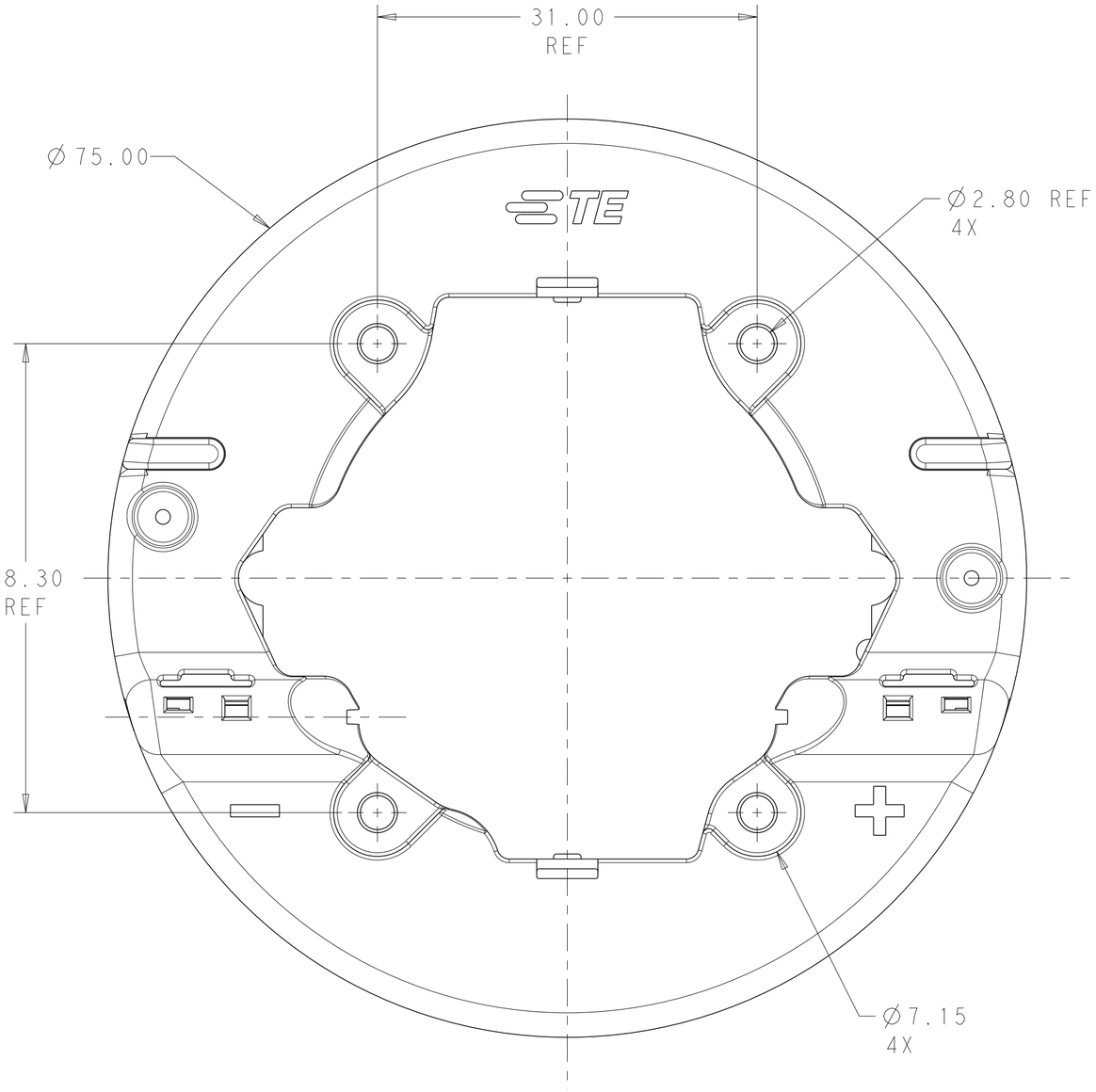

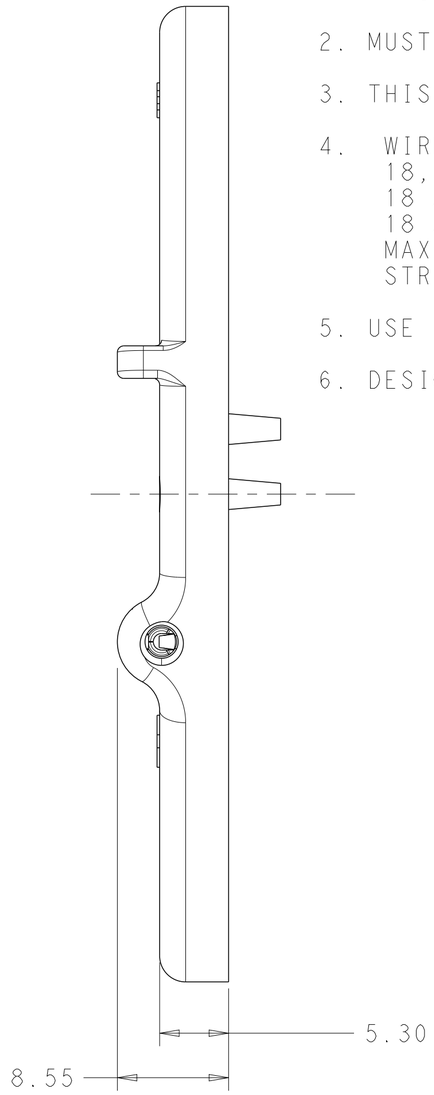

1 MATERIALS AND FINISH:
-HOUSING: GF PBT, COLOR: NATURAL
-CONTACTS: COPPER ALLOY, FINISH: Sn OVER Ni

2. MUST COMPLY WITH DIRECTIVE 2002/95/EC (ROHS)

3. THIS PRODUCT HAS NOT COMPLETED VALIDATION TESTING

4. WIRE TYPES AND SIZES ACCEPTED
18, 20 AND 22 AWG SOLID WIRE
18 AND 20 AWG PREBOND STRANDED WIRE
18 AWG STRANDED WIRE (16 STRAND COUNT)
MAX INSULATION OD: 2.10 MM (.083")
STRIP LENGTH: 7.0±1.0 (.276")

5. USE (4) M3 SIZE SCREWS, TORQUE TO 2.5-4.0 IN-LBF

6. DESIGNED TO BE USED WITH BRIDGELUX RS SERIES LED

2154455-1
PART NO.

THIS DRAWING IS A CONTROLLED DOCUMENT.

DIMENSIONS: mm

TOLERANCES UNLESS OTHERWISE SPECIFIED:
0 PLC ±-
1 PLC ±-
2 PLC ±0.20
3 PLC ±-
4 PLC ±-
ANGLES ±3°

MATERIAL 1 -

FINISH 1 -

DWN C.DAILY 24JAN2011
CHK CHANEY 24JAN2011
APVD -
PRODUCT SPEC 108-2466
APPLICATION SPEC 114-13302
WEIGHT -

TE Connectivity

NAME SOCKET ASSEMBLY, SOLDERLESS BR LED -

SIZE	CAGE CODE	DRAWING NO	RESTRICTED TO
A2	00779	C-2154455	-

Customer Drawing | SCALE 3:1 | SHEET 1 OF 2 | REV A

THIS DRAWING IS UNPUBLISHED. RELEASED FOR PUBLICATION 20
© COPYRIGHT 20 BY TE CONNECTIVITY ALL RIGHTS RESERVED.

LOC	DIST
-	-

REVISIONS

P	LTR	DESCRIPTION	DATE	DWN	APVD
	-	SEE SHEET 1	-	-	-

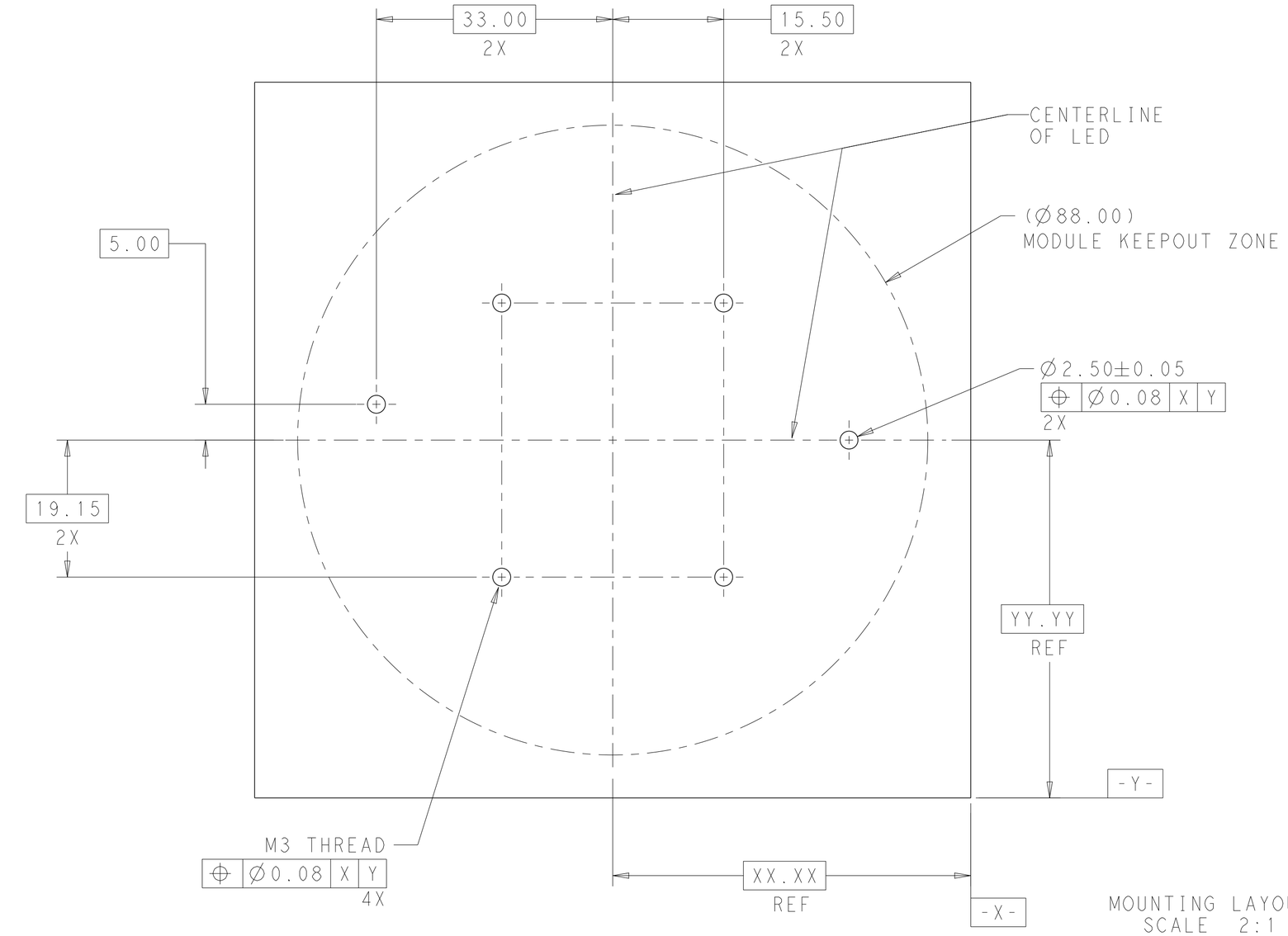

MOUNTING LAYOUT
SCALE 2:1

THIS DRAWING IS A CONTROLLED DOCUMENT.

DIMENSIONS: mm

TOLERANCES UNLESS OTHERWISE SPECIFIED:
0 PLC ±-
1 PLC ±-
2 PLC ±0.20
3 PLC ±-
4 PLC ±-
ANGLES ±3°

MATERIAL -

FINISH -

DWN C. DAILY 24JAN2011
CHK CHANEY 24JAN2011
APVD - -
PRODUCT SPEC 108-2466
APPLICATION SPEC 114-13302
WEIGHT -

TE Connectivity

NAME SOCKET ASSEMBLY, SOLDERLESS BR LED -

SIZE	CAGE CODE	DRAWING NO	RESTRICTED TO
A2	00779	C-2154455	-

Customer Drawing | SCALE 3:1 | SHEET 2 OF 2 | REV A

1471-9 (3/11)