THIS DRAWING IS UNPUBLISHED. RELEASED FOR PUBLICATION 20
© COPYRIGHT 20 ALL RIGHTS RESERVED.

GP 00

REVISIONS

P	LTR	DESCRIPTION	DATE	DWN	APVD
	A	RELEASED	26FEB2016	JW	SH

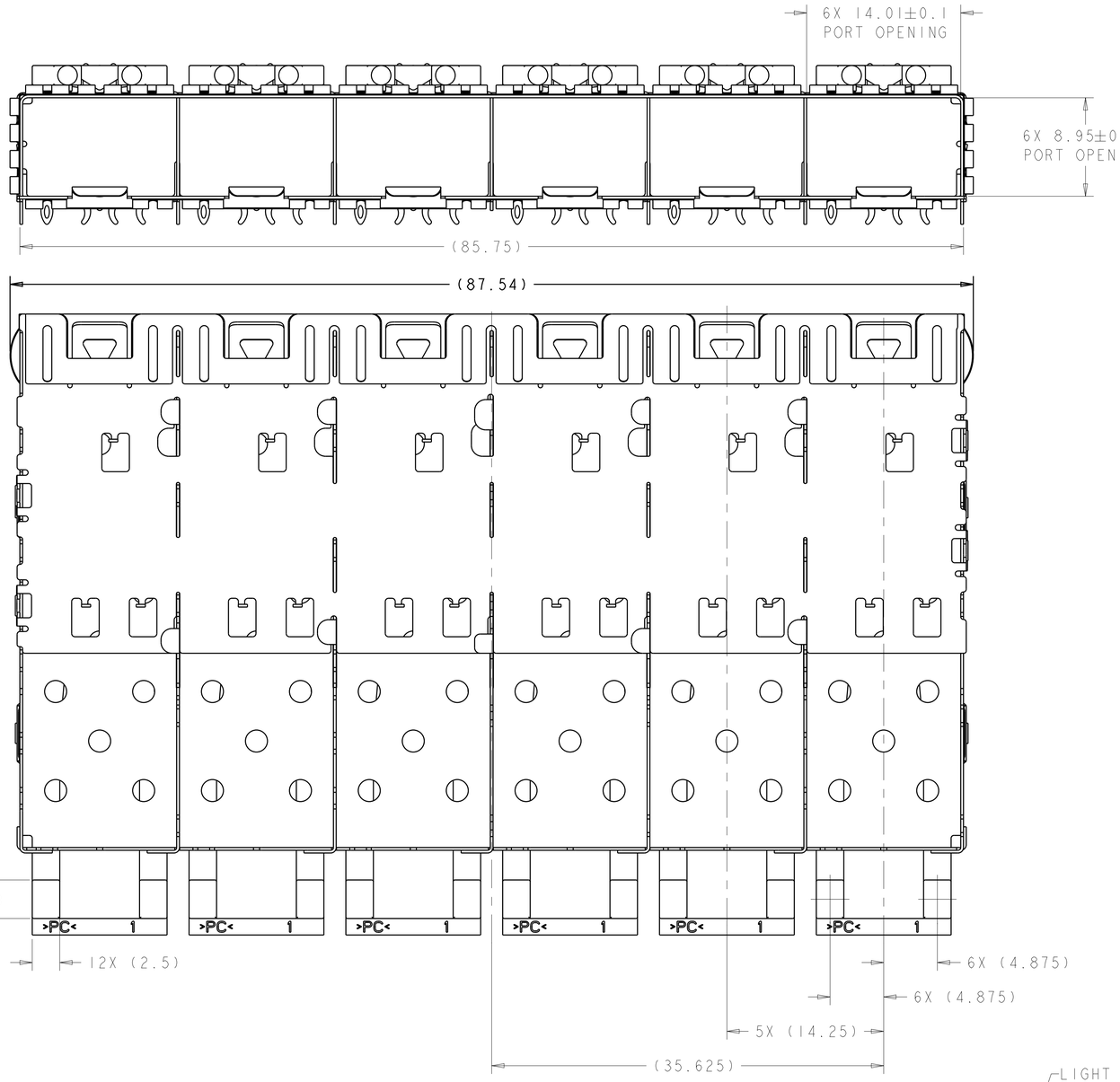

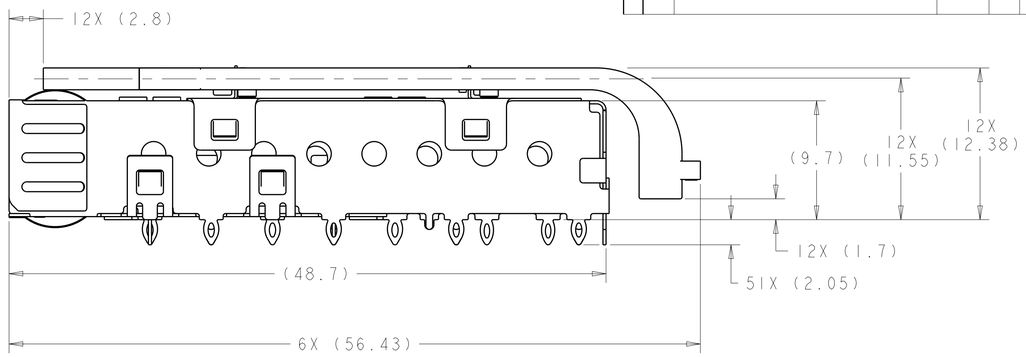

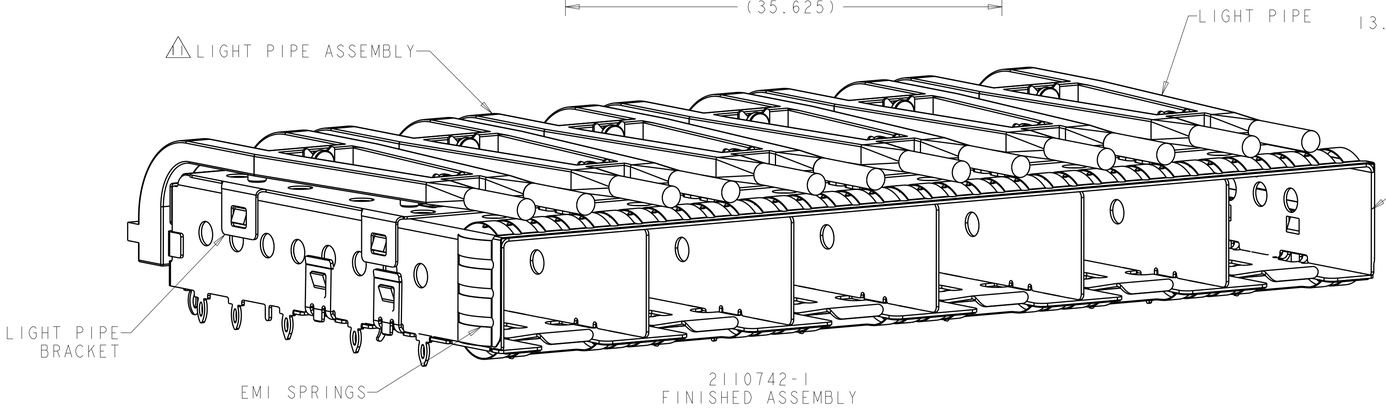

2110742-1
FINISHED ASSEMBLY
SCALE 4:1

⚠1 MATERIAL:
CAGE ASSEMBLY: 0.25mm THICK NICLEL SILVER ALLOY.
LIGHT PIPE CLIP: STAINLESS STEEL
LIGHT PIPE: POLYCARBONATE, CLEAR

⚠2 FINISH:
SPRINGS: MINIMUM OF 0.8um TIN PLATE OVER A MINIMUM OF 0.8um NICKEL UNDERPLATE.
NON-PLATED EDGES PERMISSIBLE.

3. MATES WITH SFP MSA COMPLIANT TRANSCEIVERS.

⚠4 PADS AND VIAS CHASSIS GROUND.

5. INTERPRETATION OF DATUM REFERENCE FRAME IN ACCORDANCE WITH SECT 4.4.1.1 OF ASME Y14.5M-1994.

⚠6 MINIMUM PC BOARD THICKNESS:
SINGLE SIDED = 1.50
DOUBLE SIDED = 2.25

⚠7 HOLE PATTERN REPEATS FOR EACH PORT. SPACING BETWEEN PORTS IS 14.25mm.

⚠8 DATUM AND BASIC DIMENSION ESTABLISHED BY CUSTOMER.

⚠9 REFERENCE APPLICATION SPEC. 114-13120, HOLE A, FOR RECOMMENDED DRILL HOLE DIAMETER AND PLATING THICKNESS.

⚠10 REFERENCE APPLICATION SPEC. 114-13120, HOLE B, FOR RECOMMENDED DRILL HOLE DIAMETER AND PLATING THICKNESS.

⚠11 LIGHT PIPE ASSEMBLY SHIPPED UNASSEMBLED TO CAGE ASSEMBLY. CAGE ASSEMBLY TO BE PRESSED INTO THE PCB PRIOR TO ATTACHING THE LIGHT PIPE ASSEMBLY TO THE CAGE.

12. CERTAIN MATING TRANSCEIVERS MAY REQUIRE ADDITIONAL PCB THICKNESS THAT WOULD NEED TO BE DETERMINED BY THE CUSTOMER.

13. PRODUCT HAS NOT COMPLETED VALIDATION/QUALIFICATION TESTING.

2110742-1
PART NUMBER

THIS DRAWING IS A CONTROLLED DOCUMENT.

DIMENSIONS: mm
TOLERANCES UNLESS OTHERWISE SPECIFIED:
0 PLC ±0.1
1 PLC ±0.1
2 PLC ±0.1
3 PLC ±0.1
4 PLC ±0.1
ANGLES ±1°0'
MATERIAL ⚠1
FINISH ⚠2

DWN C ROHLER 03JUN2009
CHK M SCHMITT 03JUN2009
APVD R WERTZ 03JUN2009
PRODUCT SPEC 108-2364
APPLICATION SPEC 114-13120
WEIGHT -

TE Connectivity

NAME SFP+ 1X6 CAGE ASSEMBLY
PRESS FIT, EXTERNAL EMI SPRINGS
WITH LOW PROFILE LIGHT PIPES

SIZE A1 | CAGE CODE | DRAWING NO C-2110742 | RESTRICTED TO -

Customer Drawing | SCALE 2:1 | SHEET 1 OF 4 | REV A

4805 (3/13)

THIS DRAWING IS UNPUBLISHED. RELEASED FOR PUBLICATION 20
© COPYRIGHT 20 ALL RIGHTS RESERVED.

GP 00

REVISIONS

P	LTR	DESCRIPTION	DATE	DWN	APVD
	-	SEE SHEET 1	-	-	-

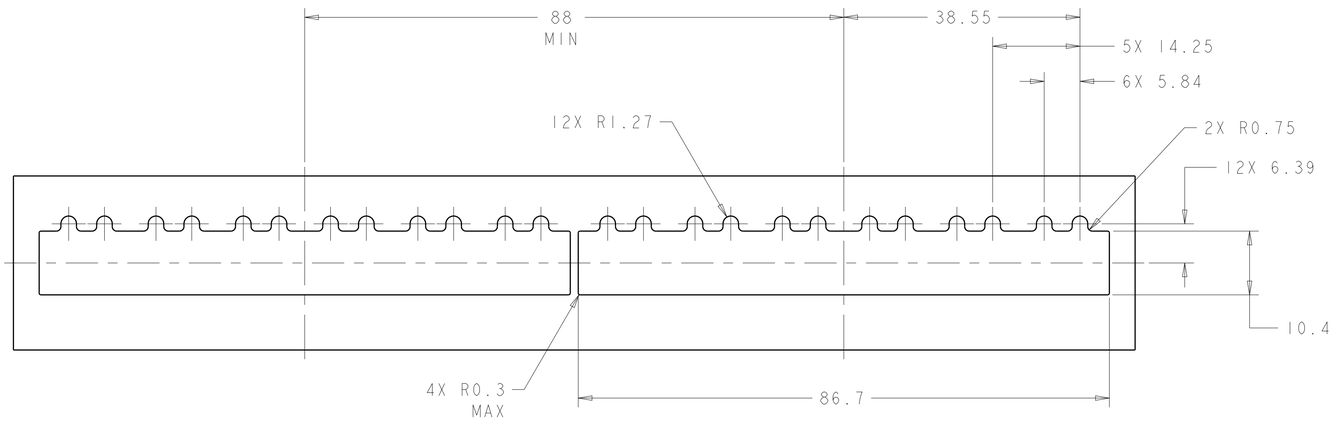

RECOMMENDED BEZEL CUT-OUT
SINGLE SIDED APPLICATIONS
SCALE 2:1

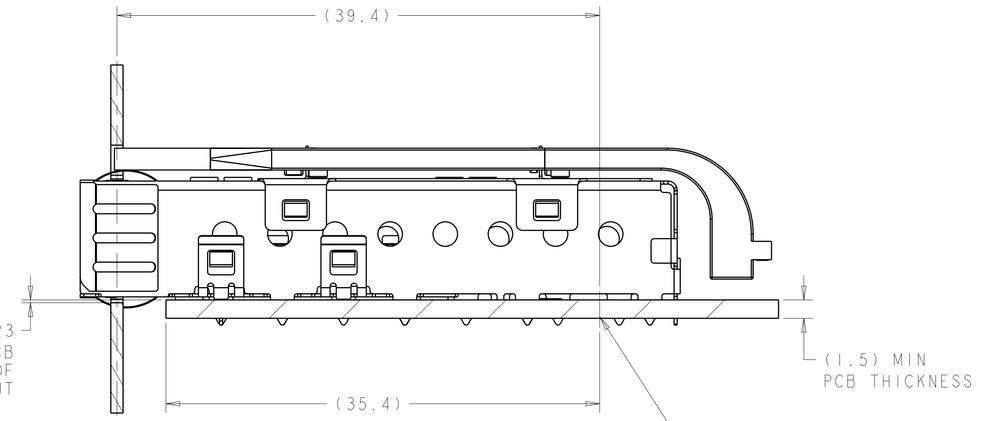

2110742-1
MOUNTED ON PC BOARD
SHOWN THRU RECOMMENDED BEZEL

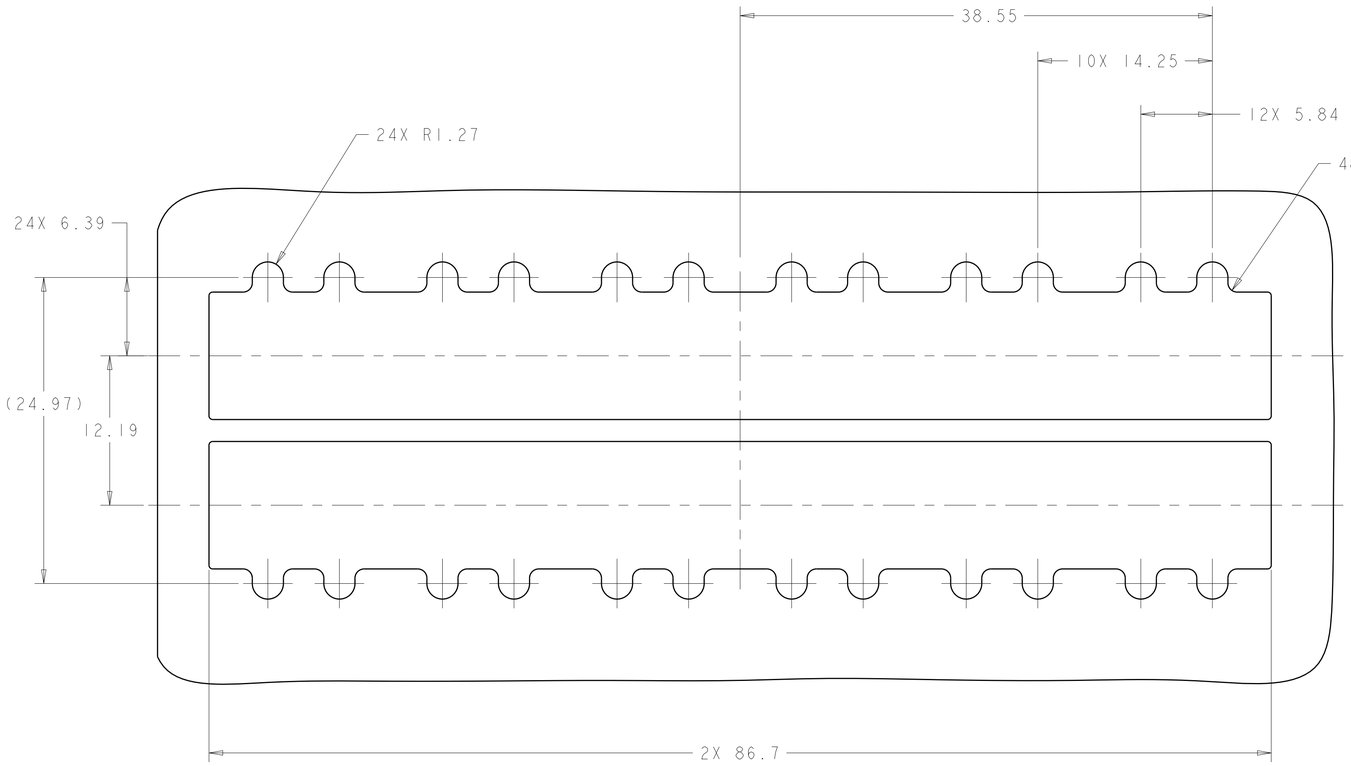

RECOMMENDED BEZEL CUT-OUT
BELLY TO BELLY APPLICATIONS

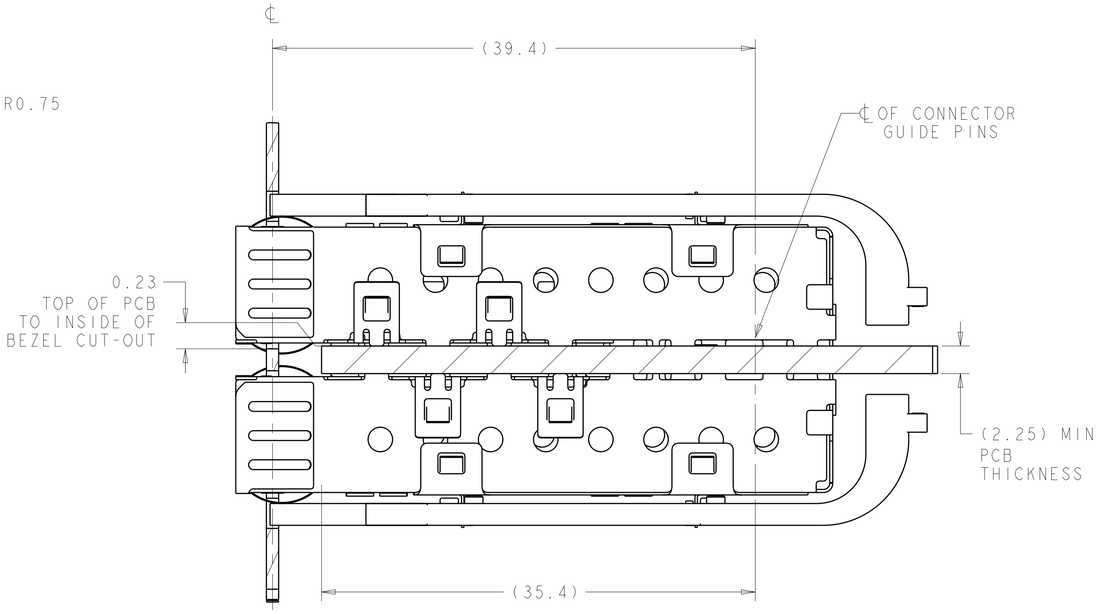

2110742-1
MOUNTED BELLY TO BELLY ON PC BOARD
SHOWN THRU RECOMMENDED BEZEL

THIS DRAWING IS A CONTROLLED DOCUMENT.

DIMENSIONS: mm

TOLERANCES UNLESS OTHERWISE SPECIFIED:
0 PLC ±0.1
1 PLC ±0.1
2 PLC ±0.1
3 PLC ±0.1
4 PLC ±0.1
ANGLES ±1°0'

MATERIAL -
FINISH -

DWN C ROHLER 03JUN2009
CHK M SCHMITT 03JUN2009
APVD R WERTZ 03JUN2009
PRODUCT SPEC 108-2364
APPLICATION SPEC 114-13120
WEIGHT -

TE Connectivity

NAME SFP+ 1X6 CAGE ASSEMBLY
PRESS FIT, EXTERNAL EMI SPRINGS
WITH LOW PROFILE LIGHT PIPES

SIZE	CAGE CODE	DRAWING NO	RESTRICTED TO
A1		C-2110742	-

Customer Drawing | SCALE 4:1 | SHEET 2 OF 4 | REV A

4805 (3/13)

THIS DRAWING IS UNPUBLISHED. RELEASED FOR PUBLICATION 20
© COPYRIGHT 20 ALL RIGHTS RESERVED.

GP 00

REVISIONS

P	LTR	DESCRIPTION	DATE	DWN	APVD
	-	SEE SHEET 1	-	-	-

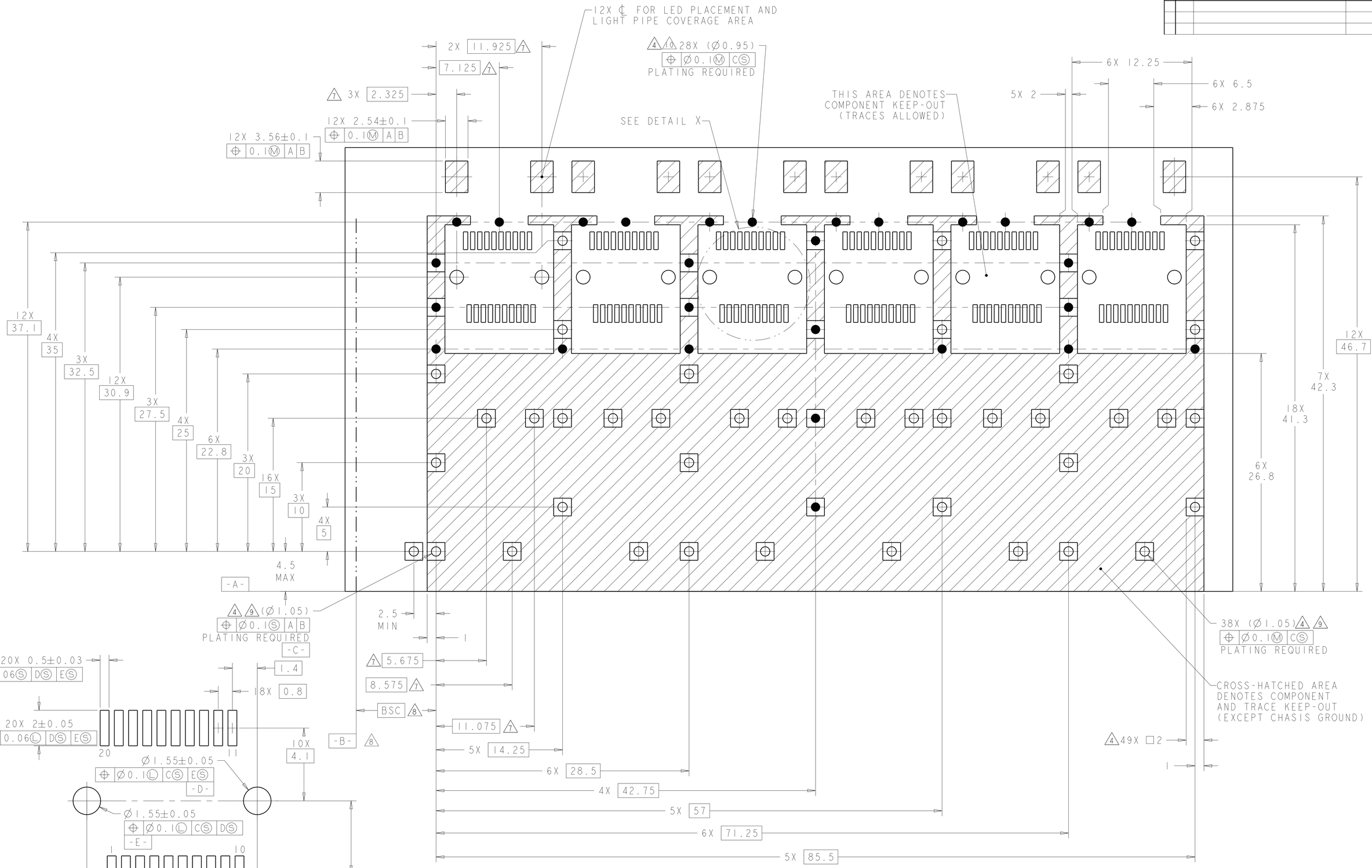

DETAIL X
RECOMMENDED PT CONNECTOR LAYOUT
6X INDIVIDUALLY
SCALE 10:1

RECOMMENDED PCB CONFIGURATION
WITH KEEP-OUT AREAS
SINGLE SIDED APPLICATIONS 6
SCALE 5:1

THIS DRAWING IS A CONTROLLED DOCUMENT.

DIMENSIONS: mm

TOLERANCES UNLESS OTHERWISE SPECIFIED:
0 PLC ±0.1
1 PLC ±0.1
2 PLC ±0.1
3 PLC ±0.1
4 PLC ±0.1
ANGLES ±1°0'

MATERIAL -
FINISH -

DWN C ROHLER 03JUN2009
CHK M SCHMITT 03JUN2009
APVD R WERTZ 03JUN2009
PRODUCT SPEC 108-2364
APPLICATION SPEC 114-13120
WEIGHT -

TE Connectivity

NAME SFP+ 1X6 CAGE ASSEMBLY
PRESS FIT, EXTERNAL EMI SPRINGS
WITH LOW PROFILE LIGHT PIPES

SIZE	CAGE CODE	DRAWING NO	RESTRICTED TO
A1		C-2110742	-

Customer Drawing | SCALE 4:1 | SHEET 3 OF 4 | REV A

4805 (3/13)

THIS DRAWING IS UNPUBLISHED. RELEASED FOR PUBLICATION 20
© COPYRIGHT 20 ALL RIGHTS RESERVED.

GP 00

REVISIONS

P	LTR	DESCRIPTION	DATE	DWN	APVD
	-	SEE SHEET 1	-	-	-

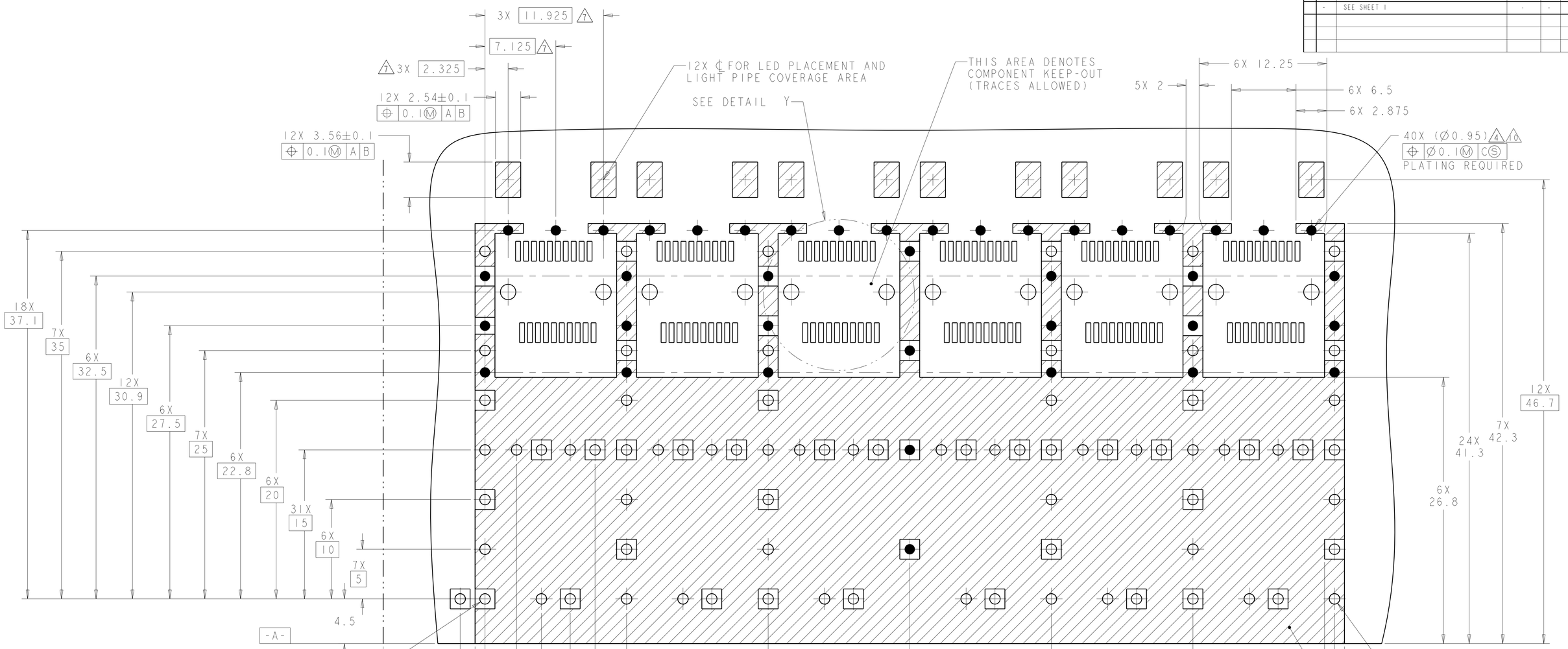

DETAIL Y
RECOMMENDED PT CONNECTOR LAYOUT
12X INDIVIDUALLY
SCALE 10:1

RECOMMENDED PC BOARD CONFIGURATION
WITH KEEP-OUT AREAS
BELLY TO BELLY APPLICATIONS 6
SCALE 5:1

THIS DRAWING IS A CONTROLLED DOCUMENT.

DIMENSIONS: mm

TOLERANCES UNLESS OTHERWISE SPECIFIED:
0 PLC ±0.1
1 PLC ±0.1
2 PLC ±0.1
3 PLC ±0.1
4 PLC ±0.1
ANGLES ±1°0'

MATERIAL - -

FINISH - -

DWN C.ROHLER 03JUN2009
CHK M.SCHMITT 03JUN2009
APVD R.WERTZ 03JUN2009
PRODUCT SPEC 108-2364
APPLICATION SPEC 114-13120
WEIGHT -

TE Connectivity

NAME SFP+ 1X6 CAGE ASSEMBLY PRESS FIT, EXTERNAL EMI SPRINGS WITH LOW PROFILE LIGHT PIPES

SIZE A1 | CAGE CODE | DRAWING NO C-2110742 | RESTRICTED TO -

Customer Drawing | SCALE 2:1 | SHEET 4 OF 4 | REV A

4805 (3/13)