Hybrid IC Isolation Amplifiers 20 Series

ISOLATION AMPLIFIER

(3-port isolation)

Functions & Features

- Being used for printed wiring board installation
- High-linearity
- Low power consumption
- Isolating between input, output and power
- Isolation between input, output and power supply up to 1500V AC
- Power 15V DC

Typical Applications

- Isolating the field and input or output circuit of microprocessor to reduce noise from field
- Available for manufacturers of small-lot products to omit the development of isolation circuit

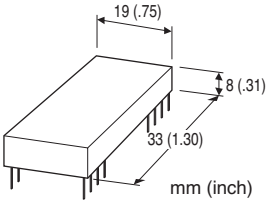

MODEL: 20VS2-01-U

ORDERING INFORMATION

- Code number: 20VS2-01-U

TYPE

01: 3-port isolation
INPUT RANGE -5 – +5 V DC
OUTPUT RANGE -5 – +5 V DC

POWER INPUT

DC Power
U: 15 V DC

GENERAL SPECIFICATIONS

Construction: Hybrid IC
Housing material: Epoxy resin
Isolation: Input to output to power

INPUT SPECIFICATIONS

■ **DC Voltage**
Input : -5 – +5 V DC
Input resistance: ≥ 1 MΩ (10 kΩ in power failure)
Overload input voltage: 30 V DC continuous
Input offset voltage: ±5 mV
Input bias current: 2 nA TYP. (@25°C)

OUTPUT SPECIFICATIONS

■ **DC Voltage**: -5 – +5 V DC
Load resistance: ≥ 2 kΩ
Output impedance: ≤ 1 Ω

REFERENCE VOLTAGE SOURCE

Output voltage: ±7 V DC ±5 % (when power supply is 15 V DC)
Load current: ≤ 2 mA

INSTALLATION

Power input
•**DC**: Operational voltage range:
Rating ±5 %; approx. 7 mA with no load;
ripple 2 % p-p max.
Operating temperature: -10 to +70°C (14 to 158°F)
Operating humidity: 30 to 90 %RH (non-condensing)
Mounting: Soldering to the printed wiring board
Weight: 20 g (0.71 oz)

PERFORMANCE in percentage of span

Linearity: ±0.001 % TYP. @G = 1 (±0.05 % max.)
Temp. coefficient:
Offset drift 5 ppm/°C TYP. @G = 1 (20 ppm/°C max.)
span drift 10 ppm/°C TYP. @G = 1 (50 ppm/°C max.)
Frequency characteristics: Approx. 1 kHz, -3 dB
Response time: ≤ 390 µsec. (0 – 90 %)
Conversion gain: ×0.995 ±1 % max.
Line voltage effect: ±0.05 % over voltage range
Insulation resistance: ≥ 100 MΩ with 500 V DC
Dielectric strength: 1500 V AC @1 minute (input or reference voltage source to output to power)
CMRR: ≥ 100 dB (500 V AC 50/60 Hz)

EXTERNAL DIMENSIONS & TERMINAL ASSIGNMENTS unit: mm (inch)

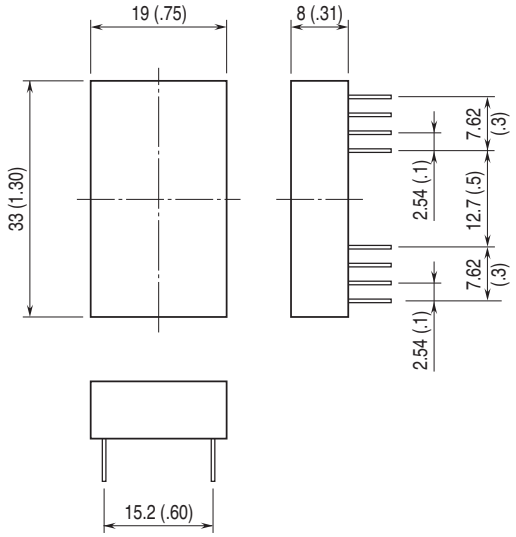

PIN ASSIGNMENTS

NON-INVERTING INPUT	1	24	REFERENCE VOLTAGE SOURCE (–)
COM (–)	2	23	REFERENCE VOLTAGE SOURCE (+)
INVERTING INPUT	3	22	COM (–)
FEEDBACK	4	21	COM (–)
NC	9	16	NC
NC	10	15	NC
POWER SUPPLY (+)	11	14	OUTPUT (+)
POWER SUPPLY (–)	12	13	OUTPUT (–)

(TOP VIEW)

SCHEMATIC CIRCUITRY & CONNECTION DIAGRAM

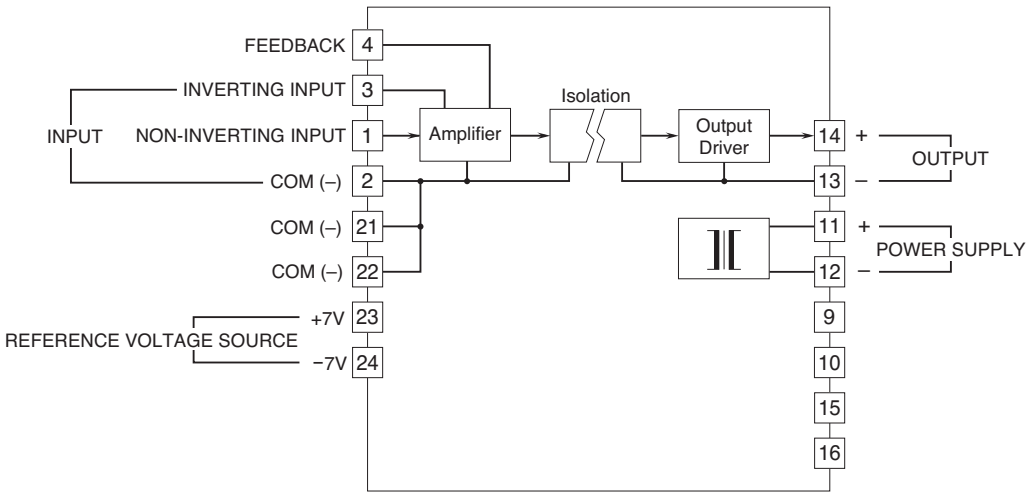

Note. The reference voltage source is common to the COM (–), terminals 2, 21 and 22.

APPLICATION EXAMPLE

■ Non-inverting amplifier circuit: Basic example of G = 1

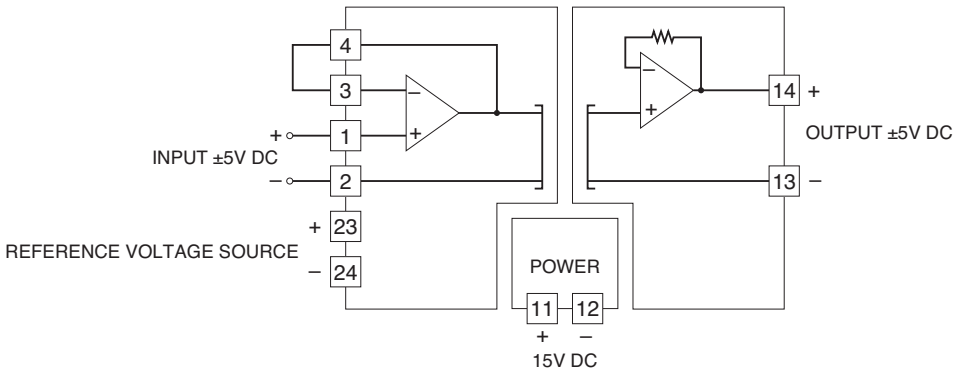

Non-inverting circuit G = 1

■ Inverting amplifier circuit: Basic example of G = -1 (output inverted to the input)

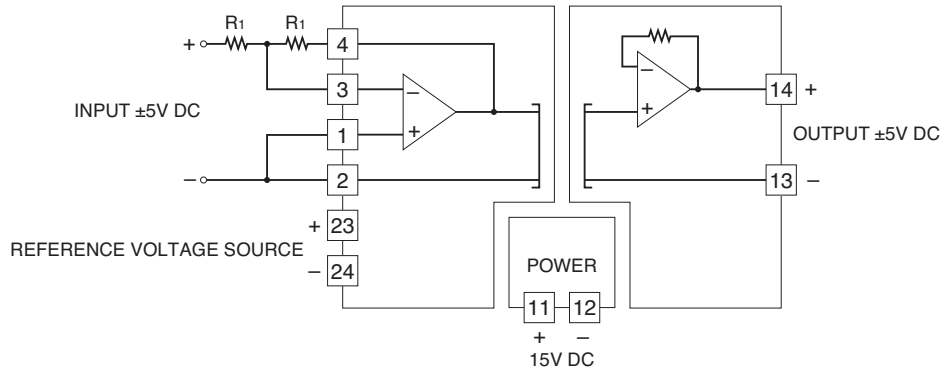

Inverting circuit G = -1

■ Non-inverting amplifier circuit: Example of G = 1 + R_1 / R_2

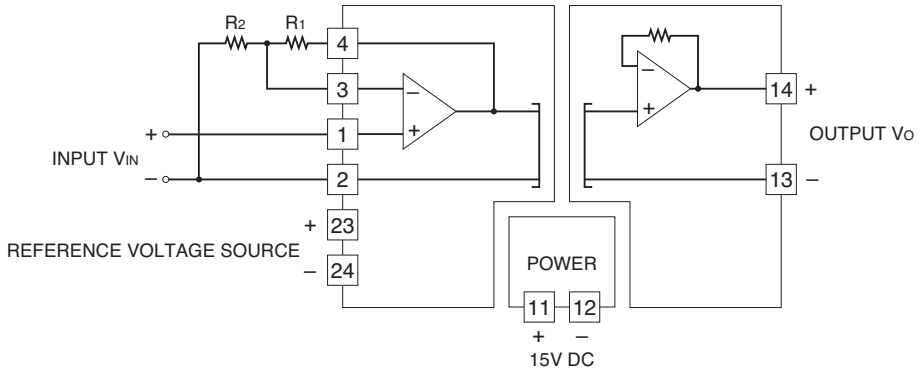

Non-inverting amplifier circuit G = 1 + R_1 / R_2

■ Inverting amplifier circuit: Example of G = -R_1 / R_2 (output inverted to the input)

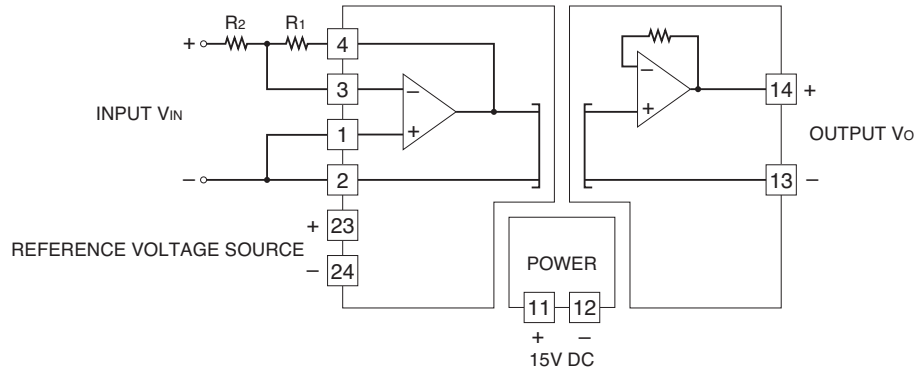

Inverting amplifier circuit G = -R_1 / R_2

■ Non-inverting amplifier circuit with external adjustments: Example of G = 2

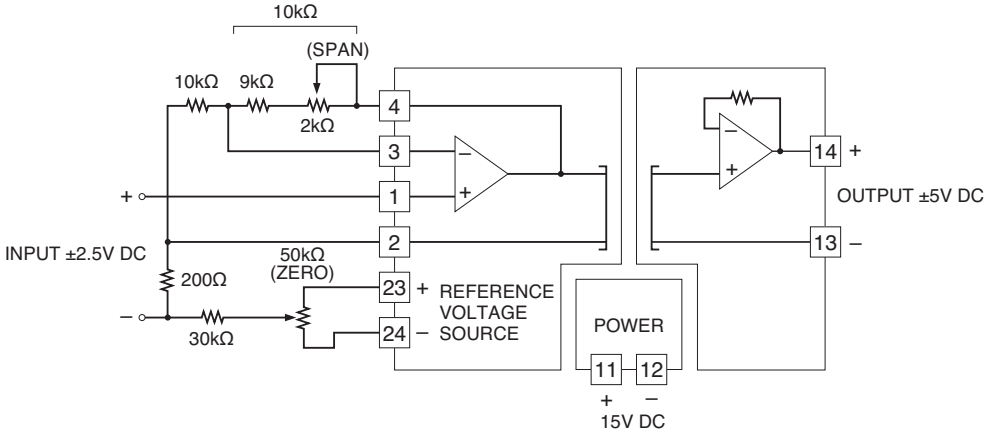

Non-inverting amplifier circuit zero/span adjustments (input ±2.5V, output ±5V)

■ Inverting amplifier's circuit with external adjustments: Example of G = -1 (output inverted to the input)

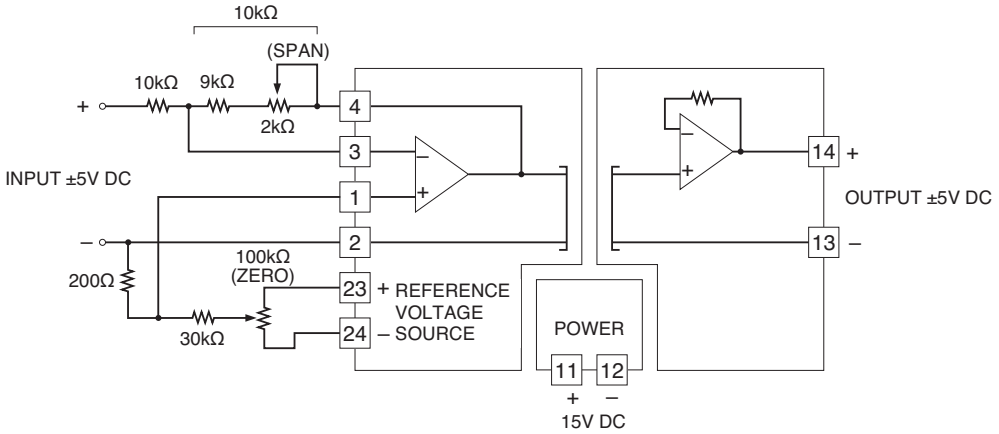

Inverting amplifier circuit zero/span adjustments (input ±5V, output ±5V)

■ Non-inverting amplifier circuit: Example of ±10V DC output (±10V DC to the input ±5V DC)

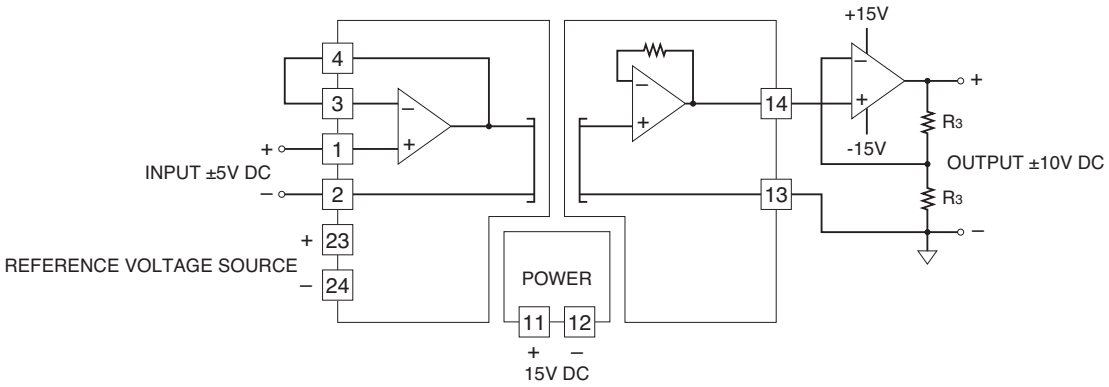

Non-inverting circuit G = 1 + R_3 / R_3 =2

■ Inverting amplifier circuit: Example of ±10V DC output (output inverted to the input)

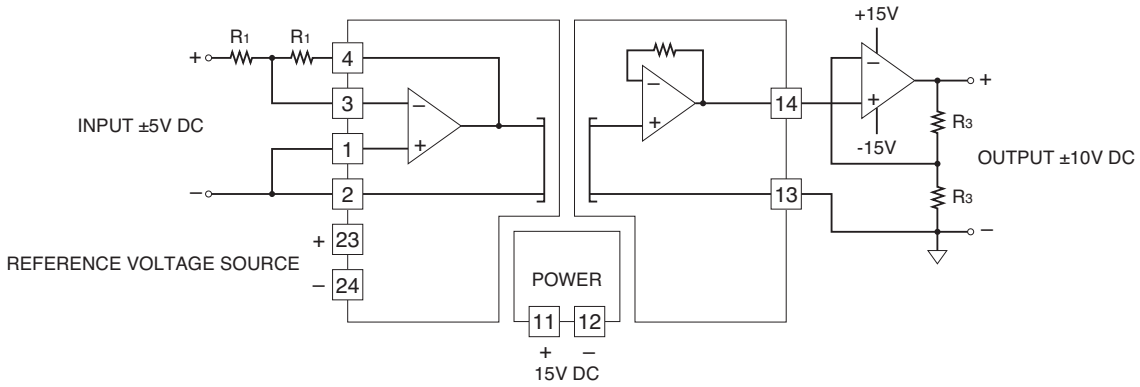

Inverting circuit G = -(1 + R_3 / R_3) = -2

⚠ Specifications are subject to change without notice.