P/N: 20PT1120F DATA SHEET

Feature

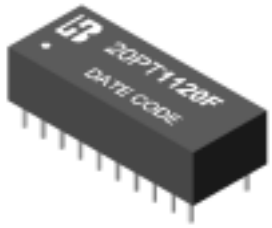

- Compliant with IEEE 802.3u and ANSI X3.263 standards Including 350uH OCL with 8mA Bias.
- Operating temperature range : 0℃ to +70℃.
- Storage temperature range: -25℃ to +105℃.

Electrical Specifications @ 25°C							
Part Number	Turns Ratio (±5%)		Primary OCL (uH Min) @100KHz/0.1V with 8mA DC Bias	OCL (uH Max)	$C_{W/W}$ (pF Max)	Pri DCR (Ω Max)	HI-POT (Vrms)
	TX	RX					
20PT1120F	1CT:1CT	1:1	350	0.4	28	0.9	1500

Continue							
Part Number	Insertion Loss (dB Max)	Return Loss (dB Min)			Cross talk (dB Min)	DCMR (dB Min)	Insulation Resistance (MΩ)
	0.3–100MHz	0.3-30MHz	30-60MHz	60-80MHz	0.3-100MHz	0.3-100MHz	
20PT1120F	-1.1	-18	-14	-12	-35	-30	10,000

Schematic

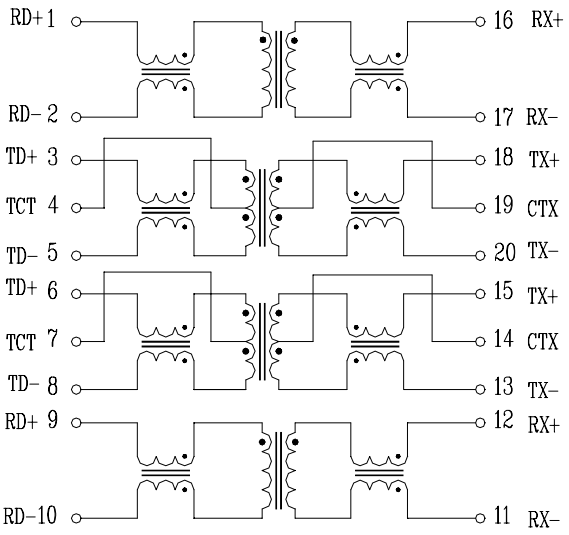

Mechanical

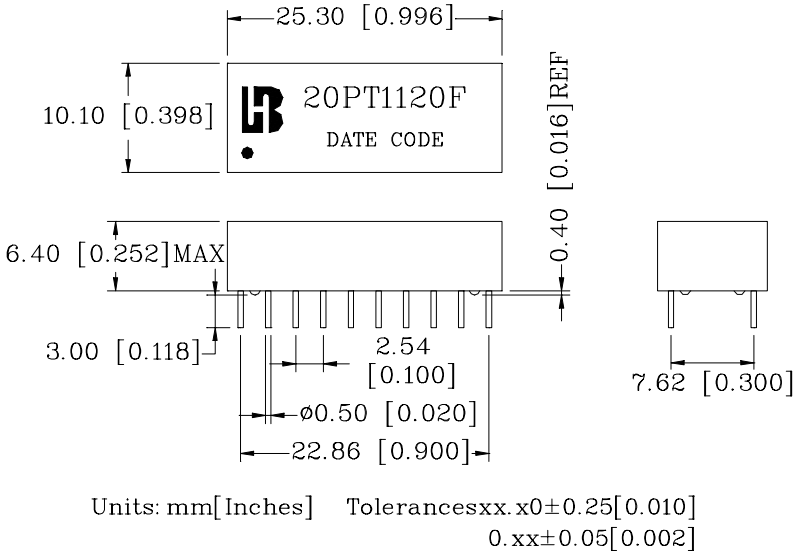

Units: mm[Inches] Tolerancesxx.x0±0.25[0.010]
0.xx±0.05[0.002]