DWG. NO. 201-910-1160G

REV	DESCRIPTION	BY DATE	APPD
D	ECR 7281	JMF 2/16/00	

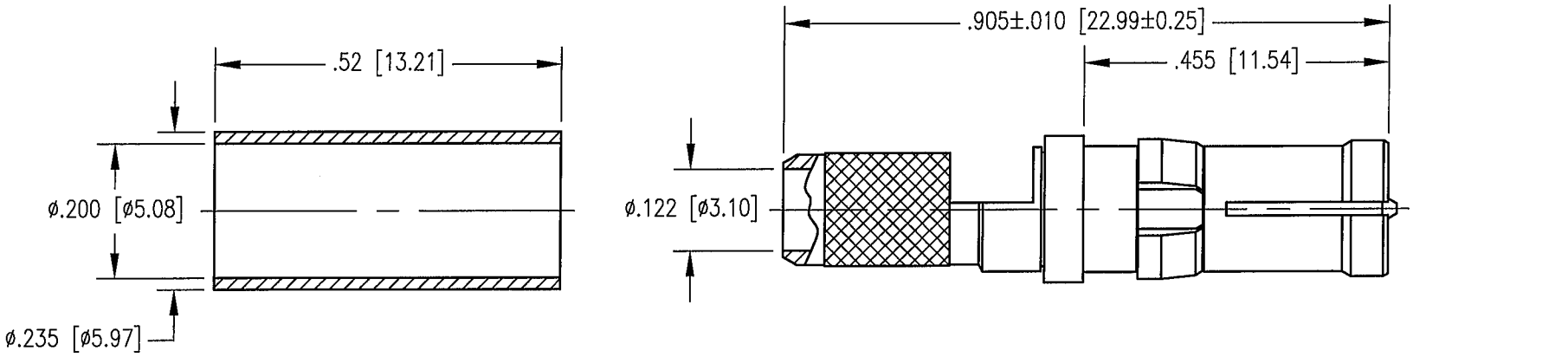

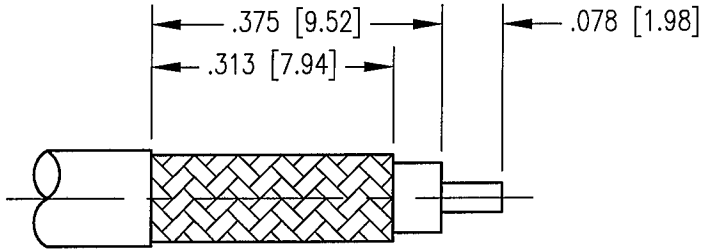

CABLE TRIMMING DIMENSIONS

NOTES:

1. MATERIALS:
   FRONT BODY: BERYLLIUM COPPER PER ASTM B196
   CLIP RING: BERYLLIUM COPPER PER ASTM B194
   FERRULE: COPPER ALLOY
   ALL OTHER METAL PARTS: BRASS PER ASTM B16
   INSULATOR: TEFLON PER ASTM D1710
2. FINISH:
   BODY AND CENTER CONTACT: .000030 MIN. GOLD PER MIL-G-45204 OVER
   .000050 MIN. NICKEL PER QQ-N-290
   FERRULE: .000005 MIN. GOLD PER MIL-G-45204 OVER
   .000050 MIN. NICKEL PER QQ-N-290
   CLIP RING: .000100 MIN. NICKEL PER QQ-N-290
   OVER COPPER FLASH
3. ELECTRICAL:
   IMPEDANCE: 50 OHMS NOMINAL
   FREQUENCY RANGE: 0 - 900 MHz
4. DESIGNED FOR USE WITH RG-58 CABLE OR EQUIVALENT.
5. FOR CABLING PROCEDURES USE CAP 9-01 WITH TRIMMING DIMENSIONS SHOWN.
6. CRIMP FERRULE USING .213 HEX DIE.

PER ASME Y14.5M-1994
UNLESS OTHERWISE SPECIFIED:
DIMENSIONS ARE IN INCHES [MM]
TOLERANCES:
DECIMALS .XX ± .01 [0.254]
.XXX ± .005 [0.127]
ANGLES ± 2° SCALE: 4:1

CUSTOMER DRAWING

DRAWN	DATE	CHECKED	DATE
JED	3/2/00	JWH	3/2/00
APPROVED	DATE	APPROVED	DATE
JMC	3/2/00	KJT	3/2/00

NORTHROP GRUMMAN
Winchester Electronics 400 Park Road Watertown, CT 06795

TITLE: RDM STRAIGHT RECEPTACLE

SIZE	DWG. NO.	SHT.	OF	REV.
A	201-910-1160G	1	1	D

June 2006 - This drawing became the property of Winchester Electronics Corporation, Wallingford, CT.