Data sheet | Item number: 2006-1611

2-conductor fuse terminal block; with pivoting fuse holder; for 5 x 20 mm miniature metric fuse; without blown fuse indication; for DIN-rail 35 x 15 and 35 x 7.5; 6 mm²; Push-in CAGE CLAMP®; 6,00 mm²; gray

www.wago.com/2006-1611

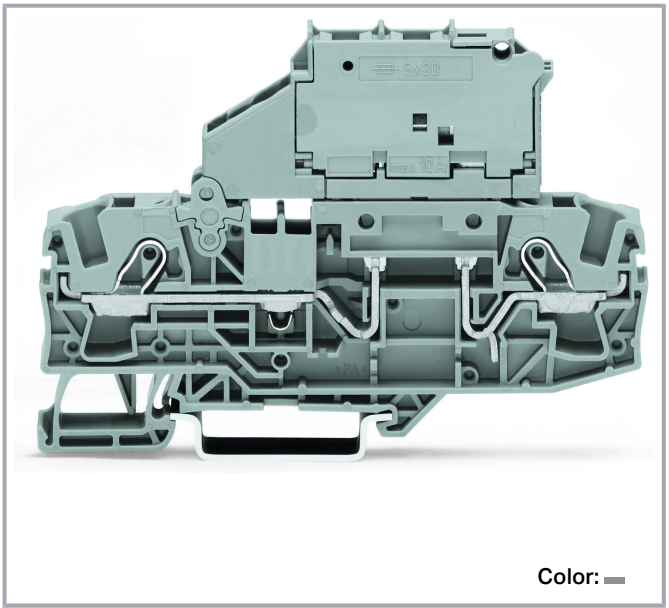

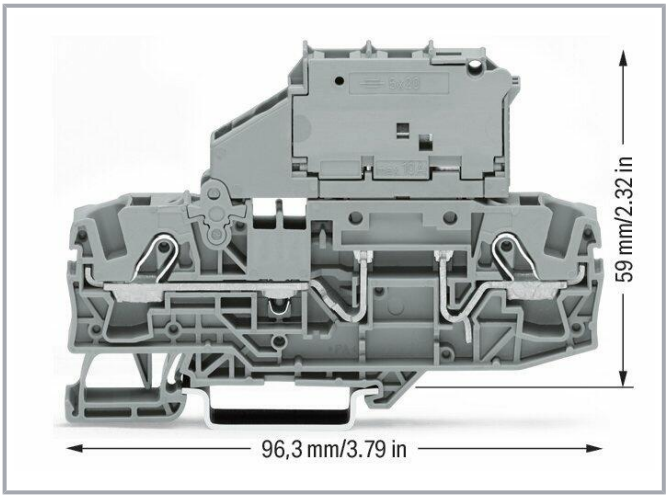

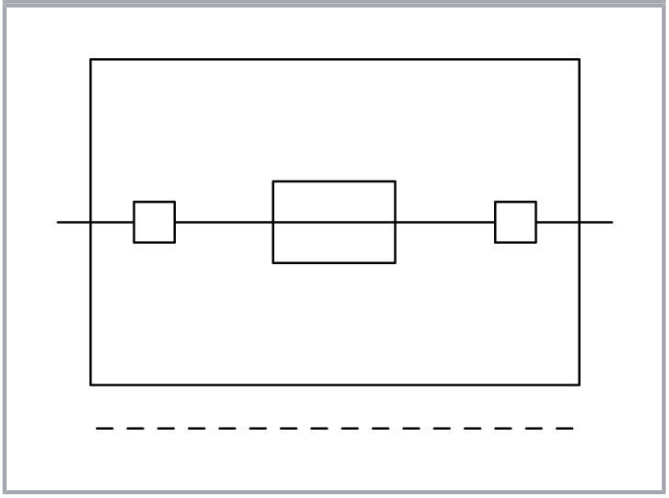

Data

Electrical data

Fuse receptacle	pivoting
Power loss (max.) $P_{l\,(max.)}$ (note)	When selecting glass cartridge fuses, make sure that the maximum power loss listed below is not exceeded. The power loss is determined according to IEC or EN 60947-7-3/VDE 0611-6 at 23°C.

Subject to changes. Please also observe the further product documentation!

WAGO GmbH & Co. KG
Hansastr. 27
32423 Minden
Phone: +49571 887-0 | Fax: +49571 887-169
Email: info.de@wago.com | Web: www.wago.com

Do you have any questions about our products?
We are always happy to take your call at +49 (571) 887-44222.

	The temperature rise of the terminal block must be checked according to their application and mounting. Higher ambient temperatures represent an additional impact on miniature fuses. Therefore, in such applications, the rated current must be reduced if necessary. More details are available from the manufacturers.
Power loss P_l (max.)	1.6 W
Power loss P_l (note)	Overload and short circuit protection (Individual arrangement)
Power loss P_l 2 (max.)	1.6 W
Power loss P_l 2 (note)	Overload and short circuit protection (Group arrangement)
Power loss P_l 3 (max.)	2.5 W
Power loss P_l 3 (note)	Short circuit protection only (Individual arrangement)
Power loss P_l 4 (max.)	2.5 W
Power loss P_l 4 (note)	Short circuit protection only (Group arrangement)

Ratings per IEC/EN

Ratings per	IEC/EN 60947-7-3
Ratings (note)	Electrical ratings are given by the fuse.
Nominal voltage (III/3)	800 V
Rated surge voltage (III/3)	8 kV
Rated current	10 A
Operation status indicator	without
Legend (ratings)	(III / 3) ≙ Overvoltage category III / Pollution degree 3

Ratings per UL

Approvals per	UL 1059
Rated voltage UL (Use Group B)	600 V
Rated current UL (Use Group B)	15 A
Rated voltage UL (Use Group C)	600 V
Rated current UL (Use Group C)	15 A

Ratings per CSA

Approvals per	C22.2 No 158
Rated voltage CSA (Use Group B)	600 V
Rated current CSA (Use Group B)	15 A
Rated voltage CSA (Use Group C)	600 V

Subject to changes. Please also observe the further product documentation!

WAGO GmbH & Co. KG
Hansastr. 27
32423 Minden
Phone: +49571 887-0 | Fax: +49571 887-169
Email: info.de@wago.com | Web: www.wago.com

Do you have any questions about our products?
We are always happy to take your call at +49 (571) 887-44222.

Rated current CSA (Use Group C)	15 A

Connection data

Total number of connection points	2
Total number of potentials	1
Number of levels	1
Number of jumper slots	2

Connection 1

Connection technology	Push-in CAGE CLAMP®
Actuation type	Push-in Operating tool
Connectable conductor materials	Copper
Nominal cross-section	6 mm²
Solid conductor	0.5 … 10 mm² / 20 … 8 AWG
Solid conductor; push-in termination	2.5 … 10 mm² / 14 … 8 AWG
Fine-stranded conductor	0.5 … 10 mm² / 20 … 8 AWG
Fine-stranded conductor; with insulated ferrule	0.5 … 6 mm² / 20 … 10 AWG
Fine-stranded conductor; with ferrule; push-in termination	2.5 … 6 mm² / 16 … 10 AWG
Note (conductor cross-section)	Depending on the conductor characteristic, a conductor with a smaller cross-section can also be inserted via push-in termination.
Strip length	13 … 15 mm / 0.51 … 0.59 inch
Wiring direction	Front-entry wiring

Physical data

Width	7.5 mm / 0.295 inch
Height	96.3 mm / 3.791 inch
Depth from upper edge of DIN-rail	59 mm / 2.323 inch

Mechanical data

Design	horizontal type
Mounting type	DIN-35 rail
Marking level	Center/side marking
Art der Sicherung	Cylindrical fuse 5 x 20 mm

WAGO GmbH & Co. KG
Hansastr. 27
32423 Minden
Phone: +49571 887-0 | Fax: +49571 887-169
Email: info.de@wago.com | Web: www.wago.com

Material data

Color	gray
Insulation material	Polyamide (PA66)
Flammability class per UL94	V0
Fire load	0.46 MJ
Weight	24.9 g

Commercial data

Product Group	22 (TOPJOB S)
PU (SPU)	25 Stück
Packaging type	box
Country of origin	CN
GTIN	4045454821166
Customs tariff number	85369095000

Approvals / Certificates

Country specific Approvals

Logo	Approval	Additional Approval Text	Certificate name
	CCA DEKRA Certification B.V.	IEC 60947	71-119205
	CCA DEKRA Certification B.V.	IEC 60947	NTR NL 7877
	CSA DEKRA Certification B.V.	C22.2 No. 158	1543858

Ship Approvals

Logo	Approval	Additional Approval Text	Certificate name
	ABS American Bureau of Shipping	EN 60947	20-HG1941090-PDA

Subject to changes. Please also observe the further product documentation!

WAGO GmbH & Co. KG
Hansastr. 27
32423 Minden
Phone: +49571 887-0 | Fax: +49571 887-169
Email: info.de@wago.com | Web: www.wago.com

Do you have any questions about our products?
We are always happy to take your call at +49 (571) 887-44222.

	DNV GL Det Norske Veritas, Germanischer Lloyd	-	TAE00001V2
	LR Lloyds Register	EN 60947	91/20112 (E9)

UL-Approvals

Logo	Approval	Additional Approval Text	Certificate name
	UL UL International Germany GmbH	UL 1059	E45172

Required accessories

End plate

End plate

	Item no.: 2006-1692 End and intermediate plate; 1 mm thick; orange	www.wago.com/2006-1692
	Item no.: 2006-1691 End and intermediate plate; 1 mm thick; gray	www.wago.com/2006-1691

Optional accessories

Marking accessories

Marking strip

	Item no.: 2009-110 Marking strips; for Smart Printer; on reel; not stretchable; plain; snap-on type; white	www.wago.com/2009-110

Marker carrier

	Item no.: 2009-198 Adaptor; gray	www.wago.com/2009-198

Marker

	Item no.: 2009-115/000-002 WMB-Inline; for Smart Printer; 1500 pieces on roll; stretchable 5 - 5.2 mm; plain; snap-on type; yellow	www.wago.com/2009-115/000-002
	Item no.: 2009-115/000-007 WMB-Inline; for Smart Printer; 1500 pieces on roll; stretchable 5 - 5.2 mm; plain; snap-on type; gray	www.wago.com/2009-115/000-007

Subject to changes. Please also observe the further product documentation!

WAGO GmbH & Co. KG
Hansastr. 27
32423 Minden
Phone: +49571 887-0 | Fax: +49571 887-169
Email: info.de@wago.com | Web: www.wago.com

Do you have any questions about our products?
We are always happy to take your call at +49 (571) 887-44222.

	**Item no.: 2009-115/000-017** WMB-Inline; for Smart Printer; 1500 pieces on roll; stretchable 5 - 5.2 mm; plain; snap-on type; light green	www.wago.com/2009-115/000-017
	**Item no.: 2009-115/000-023** WMB-Inline; for Smart Printer; 1500 pieces on roll; stretchable 5 - 5.2 mm; plain; snap-on type; green	www.wago.com/2009-115/000-023
	**Item no.: 2009-115/000-024** WMB-Inline; for Smart Printer; 1500 pieces on roll; stretchable 5 - 5.2 mm; plain; snap-on type; violet	www.wago.com/2009-115/000-024
	**Item no.: 2009-145/000-006** Mini-WSB Inline; for Smart Printer; 1700 pieces on roll; stretchable 5 - 5.2 mm; plain; snap-on type; blue	www.wago.com/2009-145/000-006
	**Item no.: 2009-145** Mini-WSB Inline; for Smart Printer; 1700 pieces on roll; stretchable 5 - 5.2 mm; plain; snap-on type; white	www.wago.com/2009-145
	**Item no.: 2009-145/000-002** Mini-WSB Inline; for Smart Printer; 1700 pieces on roll; stretchable 5 - 5.2 mm; plain; snap-on type; yellow	www.wago.com/2009-145/000-002
	**Item no.: 2009-145/000-007** Mini-WSB Inline; for Smart Printer; 1700 pieces on roll; stretchable 5 - 5.2 mm; plain; snap-on type; gray	www.wago.com/2009-145/000-007
	**Item no.: 2009-145/000-005** Mini-WSB Inline; for Smart Printer; 1700 pieces on roll; stretchable 5 - 5.2 mm; plain; snap-on type; red	www.wago.com/2009-145/000-005
	**Item no.: 2009-145/000-012** Mini-WSB Inline; for Smart Printer; 1700 pieces on roll; stretchable 5 - 5.2 mm; plain; snap-on type; orange	www.wago.com/2009-145/000-012
	**Item no.: 2009-145/000-023** Mini-WSB Inline; for Smart Printer; 1700 pieces on roll; stretchable 5 - 5.2 mm; plain; snap-on type; green	www.wago.com/2009-145/000-023
	**Item no.: 2009-145/000-024** Mini-WSB Inline; for Smart Printer; 1700 pieces on roll; stretchable 5 - 5.2 mm; plain; snap-on type; violet	www.wago.com/2009-145/000-024
	**Item no.: 2009-115** WMB-Inline; for Smart Printer; 1500 pieces on roll; stretchable 5 - 5.2 mm; plain; snap-on type; white	www.wago.com/2009-115
	**Item no.: 248-501/000-006** Mini-WSB marking card; as card; not stretchable; plain; snap-on type; blue	www.wago.com/248-501/000-006

Subject to changes. Please also observe the further product documentation!

WAGO GmbH & Co. KG
Hansastr. 27
32423 Minden
Phone: +49571 887-0 | Fax: +49571 887-169
Email: info.de@wago.com | Web: www.wago.com

Do you have any questions about our products?
We are always happy to take your call at +49 (571) 887-44222.



Item no.: 248-501/000-007
Mini-WSB marking card; as card; not stretchable; plain; snap-on type; gray

www.wago.com/248-501/000-007



Item no.: 248-501/000-002
Mini-WSB marking card; as card; not stretchable; plain; snap-on type; yellow

www.wago.com/248-501/000-002



Item no.: 248-501/000-012
Mini-WSB marking card; as card; not stretchable; plain; snap-on type; orange

www.wago.com/248-501/000-012



Item no.: 248-501
Mini-WSB marking card; as card; not stretchable; plain; snap-on type; white

www.wago.com/248-501



Item no.: 248-501/000-017
Mini-WSB marking card; as card; not stretchable; plain; snap-on type; light green

www.wago.com/248-501/000-017



Item no.: 248-501/000-005
Mini-WSB marking card; as card; not stretchable; plain; snap-on type; red

www.wago.com/248-501/000-005



Item no.: 248-501/000-024
Mini-WSB marking card; as card; not stretchable; plain; snap-on type; violet

www.wago.com/248-501/000-024



Item no.: 248-501/000-023
Mini-WSB marking card; as card; not stretchable; plain; snap-on type; green

www.wago.com/248-501/000-023



Item no.: 793-5501/000-007
WMB marking card; as card; for terminal block width 5 - 17.5 mm; stretchable 5 - 5.2 mm; plain; snap-on type; gray

www.wago.com/793-5501/000-007



Item no.: 793-5501/000-012
WMB marking card; as card; for terminal block width 5 - 17.5 mm; stretchable 5 - 5.2 mm; plain; snap-on type; orange

www.wago.com/793-5501/000-012



Item no.: 793-5501/000-014
WMB marking card; as card; for terminal block width 5 - 17.5 mm; stretchable 5 - 5.2 mm; plain; snap-on type; brown

www.wago.com/793-5501/000-014

Item no.: 793-5501/000-017

WAGO GmbH & Co. KG
Hansastr. 27
32423 Minden
Phone: +49571 887-0 | Fax: +49571 887-169
Email: info.de@wago.com | Web: www.wago.com

	WMB marking card; as card; for terminal block width 5 - 17.5 mm; stretchable 5 - 5.2 mm; plain; snap-on type; green	www.wago.com/793-5501/000-017
	**Item no.: 793-5501/000-023** WMB marking card; as card; for terminal block width 5 - 17.5 mm; stretchable 5 - 5.2 mm; plain; snap-on type; light green	www.wago.com/793-5501/000-023
	**Item no.: 793-5501/000-024** WMB marking card; as card; for terminal block width 5 - 17.5 mm; stretchable 5 - 5.2 mm; plain; snap-on type; violet	www.wago.com/793-5501/000-024
	**Item no.: 793-501/000-002** WMB marking card; as card; not stretchable; plain; snap-on type; yellow	www.wago.com/793-501/000-002
	**Item no.: 793-501/000-007** WMB marking card; as card; not stretchable; plain; snap-on type; gray	www.wago.com/793-501/000-007
	**Item no.: 793-501/000-017** WMB marking card; as card; not stretchable; plain; snap-on type; light green	www.wago.com/793-501/000-017
	**Item no.: 793-501/000-012** WMB marking card; as card; not stretchable; plain; snap-on type; orange	www.wago.com/793-501/000-012
	**Item no.: 793-501/000-023** WMB marking card; as card; not stretchable; plain; snap-on type; green	www.wago.com/793-501/000-023
	**Item no.: 793-501/000-006** WMB marking card; as card; not stretchable; plain; snap-on type; blue	www.wago.com/793-501/000-006
	**Item no.: 793-501/000-005** WMB marking card; as card; not stretchable; plain; snap-on type; red	www.wago.com/793-501/000-005
	Item no.: 793-501 WMB marking card; as card; not stretchable; plain; snap-on type; white	www.wago.com/793-501

Subject to changes. Please also observe the further product documentation!

WAGO GmbH & Co. KG
Hansastr. 27
32423 Minden
Phone: +49571 887-0 | Fax: +49571 887-169
Email: info.de@wago.com | Web: www.wago.com

Do you have any questions about our products?
We are always happy to take your call at +49 (571) 887-44222.

	**Item no.: 793-501/000-024** WMB marking card; as card; not stretchable; plain; snap-on type; violet	www.wago.com/793-501/000-024
	**Item no.: 793-5501/000-005** WMB marking card; as card; for terminal block width 5 - 17.5 mm; stretchable 5 - 5.2 mm; plain; snap-on type; red	www.wago.com/793-5501/000-005
	**Item no.: 793-5501/000-002** WMB marking card; as card; for terminal block width 5 - 17.5 mm; stretchable 5 - 5.2 mm; plain; snap-on type; yellow	www.wago.com/793-5501/000-002
	**Item no.: 793-5501/000-006** WMB marking card; as card; for terminal block width 5 - 17.5 mm; stretchable 5 - 5.2 mm; plain; snap-on type; blue	www.wago.com/793-5501/000-006
	Item no.: 793-5501 WMB marking card; as card; for terminal block width 5 - 17.5 mm; stretchable 5 - 5.2 mm; plain; snap-on type; white	www.wago.com/793-5501
	**Item no.: 2009-115/000-012** WMB-Inline; for Smart Printer; 1500 pieces on roll; stretchable 5 - 5.2 mm; plain; snap-on type; orange	www.wago.com/2009-115/000-012
	**Item no.: 2009-115/000-006** WMB-Inline; for Smart Printer; 1500 pieces on roll; stretchable 5 - 5.2 mm; plain; snap-on type; blue	www.wago.com/2009-115/000-006
	**Item no.: 2009-115/000-005** WMB-Inline; for Smart Printer; 1500 pieces on roll; stretchable 5 - 5.2 mm; plain; snap-on type; red	www.wago.com/2009-115/000-005

Carrier rail

Mounting accessories

	**Item no.: 210-197** Steel carrier rail; 35 x 15 mm; 1.5 mm thick; 2 m long; slotted; similar to EN 60715; silver-colored	www.wago.com/210-197
	**Item no.: 210-198** Copper carrier rail; 35 x 15 mm; 2.3 mm thick; 2 m long; unslotted; according to EN 60715; copper-colored	www.wago.com/210-198
	**Item no.: 210-504** Steel carrier rail; 35 x 7.5 mm; 1 mm thick; 2 m long; slotted; galvanized; according to EN 60715; silver-colored	www.wago.com/210-504
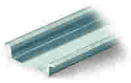	**Item no.: 210-505** Steel carrier rail; 35 x 7.5 mm; 1 mm thick; 2 m long; unslotted; galvanized; according to EN 60715; silver-colored	www.wago.com/210-505

WAGO GmbH & Co. KG
Hansastr. 27
32423 Minden
Phone: +49571 887-0 | Fax: +49571 887-169
Email: info.de@wago.com | Web: www.wago.com

	**Item no.: 210-506** Steel carrier rail; 35 x 15 mm; 1.5 mm thick; 2 m long; unslotted; galvanized; similar to EN 60715; silver-colored	www.wago.com/210-506
	**Item no.: 210-508** Steel carrier rail; 35 x 15 mm; 1.5 mm thick; 2 m long; slotted; galvanized; similar to EN 60715; silver-colored	www.wago.com/210-508
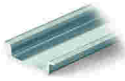	**Item no.: 210-113** Steel carrier rail; 35 x 7.5 mm; 1 mm thick; 2 m long; unslotted; according to EN 60715; silver-colored	www.wago.com/210-113
	**Item no.: 210-118** Steel carrier rail; 35 x 15 mm; 2.3 mm thick; 2 m long; unslotted; according to EN 60715; silver-colored	www.wago.com/210-118
	**Item no.: 210-112** Steel carrier rail; 35 x 7.5 mm; 1 mm thick; 2 m long; slotted; according to EN 60715; "Hole width 25 mm; silver-colored	www.wago.com/210-112
	**Item no.: 210-114** Steel carrier rail; 35 x 15 mm; 1.5 mm thick; 2 m long; unslotted; similar to EN 60715; silver-colored	www.wago.com/210-114
	**Item no.: 210-115** Steel carrier rail; 35 x 7.5 mm; 1 mm thick; 2 m long; slotted; according to EN 60715; "Hole width 18 mm; silver-colored	www.wago.com/210-115
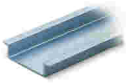	**Item no.: 210-196** Aluminum carrier rail; 35 x 8.2 mm; 1.6 mm thick; 2 m long; unslotted; similar to EN 60715; silver-colored	www.wago.com/210-196

Locking levers

Locking device

	**Item no.: 210-254** Interlocking link; mechanically locks multiple links; 1 m long; transparent	www.wago.com/210-254

Jumpers

Jumper

	**Item no.: 2006-402** Jumper; 2-way; insulated; light gray	www.wago.com/2006-402
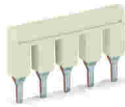	**Item no.: 2006-405** Jumper; 5-way; insulated; light gray	www.wago.com/2006-405
	**Item no.: 2006-433** Jumper; from 1 to 3; insulated; light gray	www.wago.com/2006-433
	**Item no.: 2006-403** Jumper; 3-way; insulated; light gray	www.wago.com/2006-403
	**Item no.: 2006-405/011-000** Star point jumper; 3-way; insulated; light gray	www.wago.com/2006-405/011-000

Subject to changes. Please also observe the further product documentation!

WAGO GmbH & Co. KG
Hansastr. 27
32423 Minden
Phone: +49571 887-0 | Fax: +49571 887-169
Email: info.de@wago.com | Web: www.wago.com

Do you have any questions about our products?
We are always happy to take your call at +49 (571) 887-44222.

	Item no.: 2006-404 Jumper; 4-way; insulated; light gray	www.wago.com/2006-404
	Item no.: 2006-434 Jumper; from 1 to 4; insulated; light gray	www.wago.com/2006-434
	Item no.: 2006-435 Jumper; from 1 to 5; insulated; light gray	www.wago.com/2006-435

End plate

End plate

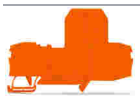	**Item no.: 2006-991** End plate for fuse terminal blocks; 2 mm thick; gray	www.wago.com/2006-991
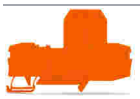	**Item no.: 2006-992** End plate for fuse terminal blocks; 2 mm thick; orange	www.wago.com/2006-992

Tool

Operating tool

	Item no.: 210-721 Operating tool; Blade: 5.5 x 0.8 mm; with a partially insulated shaft; multicoloured	www.wago.com/210-721

Cover

Cover

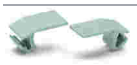	**Item no.: 2006-191** Lockout cap; for wire insertion and actuating opening; gray	www.wago.com/2006-191

Ferrule

Ferrule

	Item no.: 216-208 Ferrule; Sleeve for 6 mm² / AWG 10; insulated; electro-tin plated; electrolytic copper; gastight crimped; acc. to DIN 46228, Part 4/09.90; yellow	www.wago.com/216-208
	Item no.: 216-263 Ferrule; Sleeve for 1 mm² / AWG 18; insulated; electro-tin plated; electrolytic copper; gastight crimped; acc. to DIN 46228, Part 4/09.90; red	www.wago.com/216-263
	Item no.: 216-266 Ferrule; Sleeve for 2.5 mm² / AWG 14; insulated; electro-tin plated; electrolytic copper; gastight crimped; acc. to DIN 46228, Part 4/09.90; blue	www.wago.com/216-266
	Item no.: 216-264 Ferrule; Sleeve for 1.5 mm² / AWG 16; insulated; electro-tin plated; electrolytic copper; gastight crimped; acc. to DIN 46228, Part 4/09.90; black	www.wago.com/216-264
	Item no.: 216-262 Ferrule; Sleeve for 0.75 mm² / 18 AWG; insulated; electro-tin plated; electrolytic copper; gastight crimped; acc. to DIN 46228, Part 4/09.90; gray	www.wago.com/216-262
	Item no.: 216-267 Ferrule; Sleeve for 4 mm² / AWG 12; insulated; electro-tin plated; electrolytic copper; gastight crimped; acc. to DIN 46228, Part 4/09.90; gray	www.wago.com/216-267

Mounting

Subject to changes. Please also observe the further product documentation!

WAGO GmbH & Co. KG
Hansastr. 27
32423 Minden
Phone: +49571 887-0 | Fax: +49571 887-169
Email: info.de@wago.com | Web: www.wago.com

Do you have any questions about our products?
We are always happy to take your call at +49 (571) 887-44222.

Mounting accessories

Item no.: 709-156
Cover; Type 3; suitable for cover carrier, type 3; 1 m long; transparent
www.wago.com/709-156



Item no.: 709-169
Cover carrier; Type 3; gray
www.wago.com/709-169

Testing and measuring

Testing accessories



Item no.: 210-136
Test plug; 2 mm Ø; with 500 mm cable; red
www.wago.com/210-136

Protective warning marker

Cover



Item no.: 2006-115
Protective warning marker; with high-voltage symbol, black; for 5 terminal blocks; yellow
www.wago.com/2006-115

Downloads

Documentation

Bid Text

2006-1611 docx - Datei	2019. 4. 17.	docx 15.9 kB	Download
2006-1611 X81 - Datei	2019. 4. 17.	xml 4.2 kB	Download

Additional Information

	pdf 125.0 kB	Download
Technical explanations	pdf 2.2 MB	Download

CAD/CAE-Data

CAE data

EPLAN Data Portal 2006-1611	URL	Download
ZUKEN Portal 2006-1611	URL	Download

WSCAD Universe 2006-1611

Subject to changes. Please also observe the further product documentation!

WAGO GmbH & Co. KG
Hansastr. 27
32423 Minden
Phone: +49571 887-0 | Fax: +49571 887-169
Email: info.de@wago.com | Web: www.wago.com

Do you have any questions about our products?
We are always happy to take your call at +49 (571) 887-44222.

WSCAD Universe 2006-1611	URL	Download

CAD data

2D/3D Models 2006-1611	URL	Download

Environmental Product Compliance

Compliance Search

Environmental Product Compliance 2006-1611 2-conductor fuse terminal block; with pivoting fuse holder; for 5 x 20 mm miniature metric fuse; without blown fuse indication; for DIN-rail 35 x 15 and 35 x 7.5; 6 mm²; Push-in CAGE CLAMP®; 6,00 mm²; gray	URL	Download

Installation Notes

Conductor termination

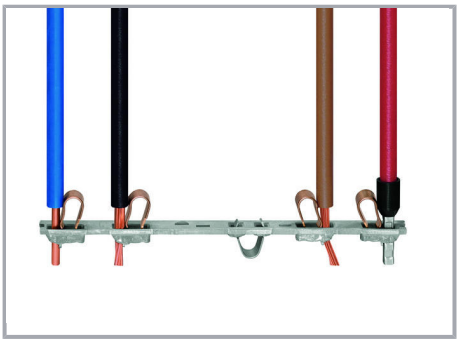

All conductor types at a glance

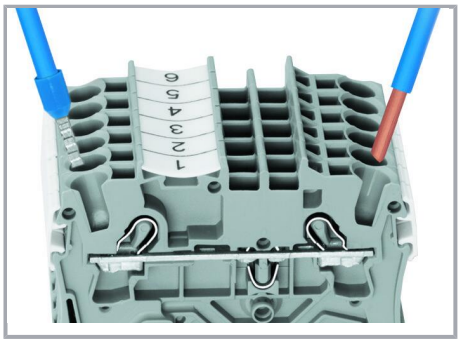

Push-in termination of solid and ferruled conductors

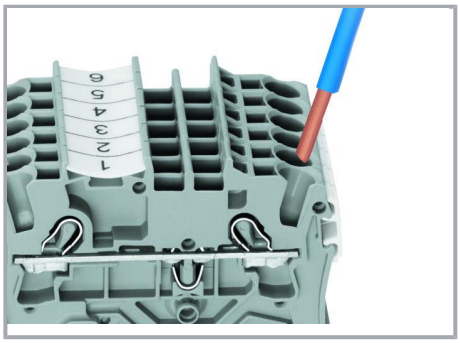

Inserting a conductor via push-in termination:

Solid conductors with cross-sections from either one size above, or up to two sizes below, the rated cross-section can be simply pushed in – no tools needed.



Inserting a conductor via operating tool:

Connecting fine-stranded conductors without ferrules, or small cross-sectional conductors that cannot be pushed in, is performed similarly to the original CAGE CLAMP® – just use an operating tool.

Advantage:

To open the clamp, the operating tool is inserted vertically. The conductor entry is less than 15 degrees for easier wiring.

Commoning

WAGO GmbH & Co. KG
Hansastr. 27
32423 Minden
Phone: +49571 887-0 | Fax: +49571 887-169
Email: info.de@wago.com | Web: www.wago.com

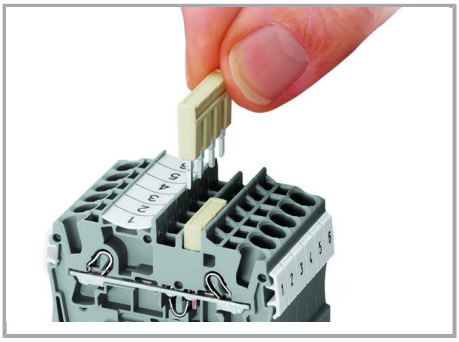

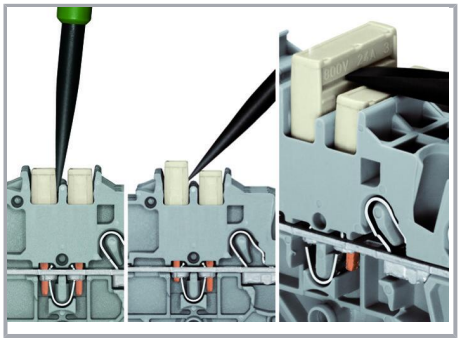

The push-in type jumper bar system is based on the common plug and socket principle. Each terminal block is spring-loaded with a double socket and a resilient CrNi steel spring. The jumper contact material is pure electrolytic copper, which allows for an extremely small design capable of carrying the full-rated current of the terminal block. Ground terminal blocks can also be commoned using the same jumper system. Custom jumpers are created by breaking and removing jumper contacts (2000, 2001, 2002, 2004 Series).

Removing a push-in type jumper bar:

Insert the operating tool between the jumper and partition wall of the dual jumper slots, then lift up the jumper.

Place the operating tool in the center of jumpers for up to five contacts (see above), or alternately on both sides for jumpers with more than five contacts.



Pivoting fuse holder with spare fuse holder

WAGO GmbH & Co. KG
Hansastr. 27
32423 Minden
Phone: +49571 887-0 | Fax: +49571 887-169
Email: info.de@wago.com | Web: www.wago.com

Do you have any questions about our products?
We are always happy to take your call at +49 (571) 887-44222.



Fused disconnect terminal block with a pivoting fuse holder

Pivot the fuse holder into the locked open position.



Fused disconnect terminal block with a pivoting fuse holder

Fuse replacement:

Open the cover to replace the fuse









WAGO GmbH & Co. KG
Hansastr. 27
32423 Minden
Phone: +49571 887-0 | Fax: +49571 887-169
Email: info.de@wago.com | Web: www.wago.com

Do you have any questions about our products?
We are always happy to take your call at +49 (571) 887-44222.

Marking

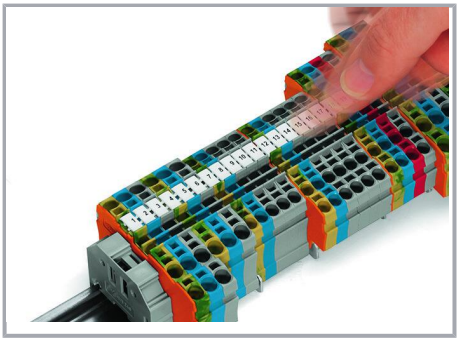

Snapping WMB Inline markers into marker slots.

Product family

TOPJOB® S

TOPJOB® S: In various industrial applications and modern building installations, WAGO's wide and versatile range of rail-mount terminal blocks provides more than just reliable electrical connections.

Show all products from the family

Subject to changes. Please also observe the further product documentation!

WAGO GmbH & Co. KG
Hansastr. 27
32423 Minden
Phone: +49571 887-0 | Fax: +49571 887-169
Email: info.de@wago.com | Web: www.wago.com

Do you have any questions about our products?
We are always happy to take your call at +49 (571) 887-44222.