Order Number
200218-4000

molex®

Application Tooling Specification

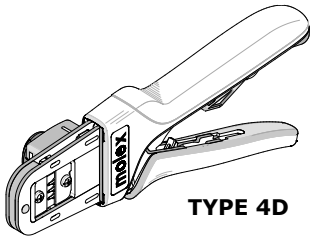

FEATURES

- A full-cycle ratcheting hand tool ensures complete crimps
- Ergonomic soft grip handles for comfortable crimping
- A precision user-friendly terminal locator holds terminals in the proper crimping position
- Right- or left-handed operation
- Dies and locator from this tool can be used in the Battery Powered Tool Order No. 63816-0270 (110 V) or 63816-0280 (220 V), with the use of the 63816-0800 Crimp Head
- This tool is IPC/WHMA-A-620 Class 2 compliant, as indicated on page 2

SCOPE

Products: CP-3.3 Wire-to-Wire plug and receptacle terminals, 18-22 AWG, UL1007 wire.

Terminal Series No.	Terminal Order No.		Wire Size	Insulation Diameter				Strip Length	
				IPC/WHMA-A-620 (1)		Terminal (2)			
	Reel (3)	Loose	AWG	mm	In.	mm	In.	mm	In.
505607	505607-0000	505607-0100	18	1.83-2.13	.072-.084	1.55-2.60	.060-.100	2.80-3.20	.110-.130
			20	1.65-2.05	.065-.081				
			22	1.48-1.78	.058-.070				
505608	505608-0000	505608-0100	18	1.83-2.13	.072-.084				
			20	1.65-2.05	.065-.081				
			22	1.48-1.78	.058-.070				

(1) To achieve optimum IPC/WHMA-A-620 insulation crimps, use this insulation OD range.
(2) Overall insulation OD specification for terminal.
(3) Terminals to be cut from carrier 0.25mm (.010") max cut off tab.

DEFINITION OF TERMS

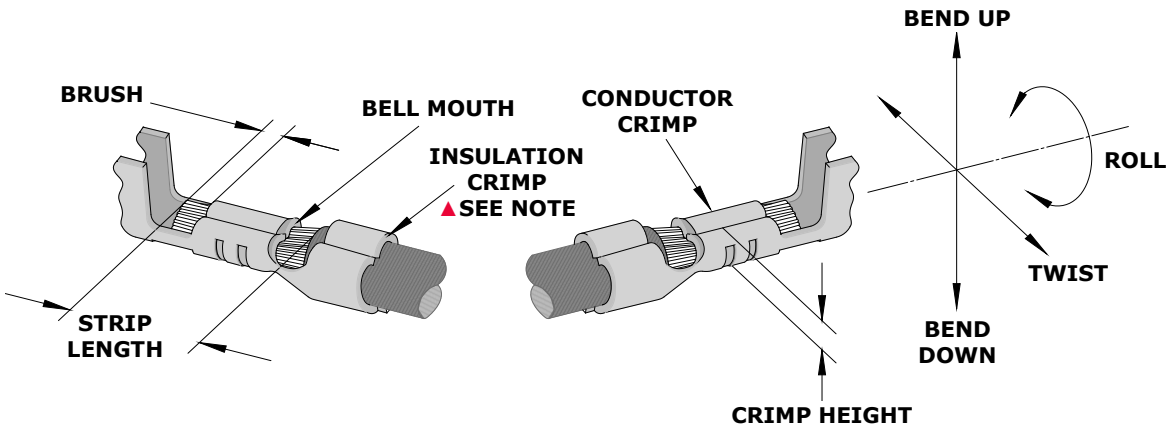

▲ Insulation Crimp Note

Due to the terminal's insulation grip design or insulation diameter range, this tool uses overlap form geometry in the insulation punch. This produces an overlap insulation crimp (A-620-compliant). Although the insulation punch profile may appear lopsided, this is a normal condition for this tool. See figure to the right. This tool uses the overlap form on all crimp profiles.

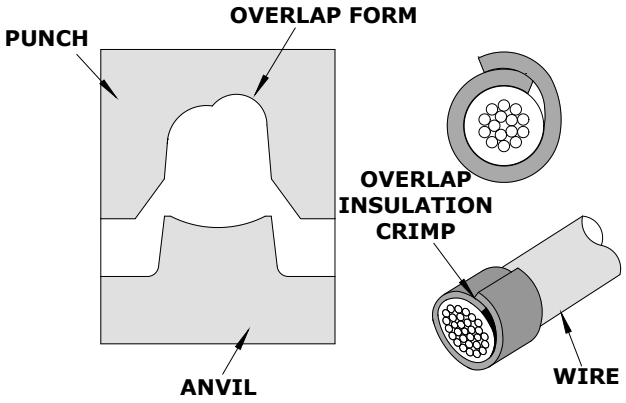

CONDITIONS

After crimping, the crimped profile should measure as follows:

Terminal Series No.	Wire Size	Conductor Crimp			
		Height		Width	
	AWG	mm	In.	mm	In.
505607 505608	18	1.03-1.13	.041-.044	1.55-1.65	.061-.065
	20	0.87-0.97	.034-.038		
	22	0.82-0.87	.032-.034		

Terminal Series No.	Wire Size	Insulation Crimp▲				Pull Force Minimum		Profile		
		Height (Ref.)		Width (Ref.)						
	AWG	mm	In.	mm	In.	N	Lb.	A	B	C
505607 505608	18	2.50	.098	2.25	.088	88.2	19.8		X	
	20	2.50	.098	2.20	.087	58.8	13.2	X		
	22	2.30	.090	2.15	.085	39.2	8.8			X

▲To achieve IPC/WHMA-A-620 Class 2 crimps, the following overall wire insulation diameter ranges are recommended:

- **Profile A:** 1.65-2.05mm (.065-.081") or UL1007
- **Profile C:** 1.48-1.78mm (.058-.070") or UL1007
- **Profile B:** 1.83-2.13mm (.072-.084") or UL1007

Crimp attribute specifications are as follows:

Terminal Series No.	Wire Size	Bell Mouth		Brush		Bend Up	Bend Down	Twist	Roll
	AWG	mm	In.	mm	In.				
505607 505608	18 20 22	0.25-0.60	.010-.024	0.00-1.00	.000-.039	3° max	3° max	3° max	6° max

Tool Qualification Notes

1. (Ref) means that the dimension provided is approximate because of the wide range of wires, conductor stranding, insulation diameter and insulation hardness.
2. An occasional conductor crimp height measurement should be performed. It must lie between the minimum and maximum crimp height specification.
3. Pull force should be measured with no influence from the insulation crimp. To ensure this, strip the wire long enough so the terminal insulation grips do not contact the wire insulation.

Notes

1. This tool should only be used for the terminals and wire gauges specified on this sheet.
2. Variations in tools, terminals, wire stranding and insulation types may affect crimp height.
3. This tool is intended for AWG conductor sizes. It may not give good insulation crimp support for insulation sizes outside of the specified range.

4. Molex does not repair hand tools. See warranty on page 6. The replacement parts listed are the only parts available for repair. If the handles or crimp tooling become damaged or worn, a new tool must be purchased.
5. Conductor crimp height should be used as the final criterion for an acceptable crimp. Refer to Molex Quality Crimping Handbook 63800-0029 for additional information on crimping and crimp testing.
6. Molex does not certify crimp hand tools.

Note

The crimp height chart is provided with this document as reference only. Due to the wide range of wires, strands, insulation diameters and insulation hardness available, actual crimp height measurements may vary slightly. An occasional destructive pull force test should be performed to verify the conductor crimp. The pull force value must exceed the minimum pull force specifications listed.

OPERATION

CAUTION: Crimp only the Molex terminals listed in the scope for this tool. Do not crimp hardened objects as damage can occur to the tool frame or crimp dies.

Open the tool by squeezing the handles together. At the end of the closing stroke, the ratchet mechanism will release the handles and the hand tool will spring open. See Figure 1.

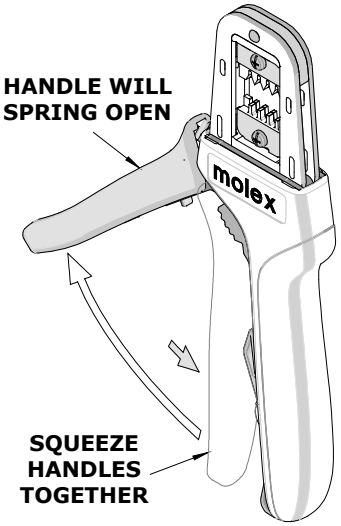

Figure 1

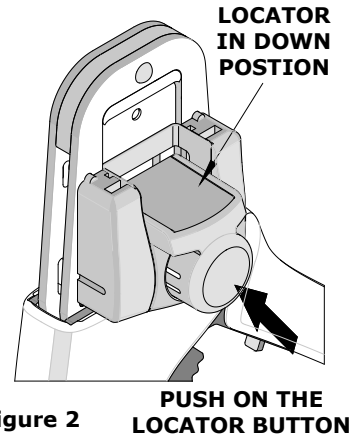

Figure 2

Crimping Terminals

1. Select the desired terminal listed from the preceding charts. Then, install it in the proper locator. See Locator Replacement section on page 4.
2. Make sure the center of the locator is in the down position. With the locator attached, push the locator button on the back of the hand tool to bring the locator forward through the tooling. See Figure 2.
3. While holding in the locator button, load the terminal into the proper nest opening in the locator based on the wire gauge or terminal type markings on the hand tooling. See Figure 3.

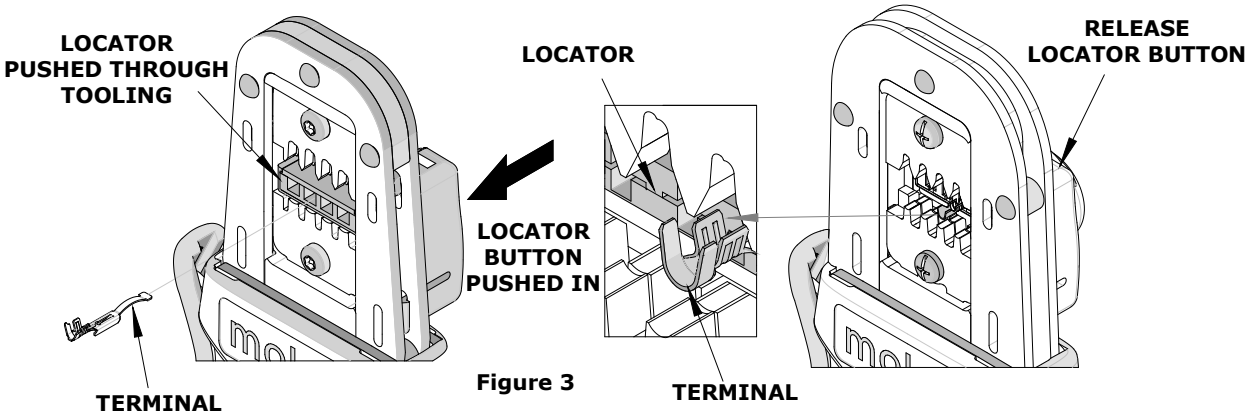

Figure 3

4. Release the locator button, allowing the locator to return to the crimping position.
5. Close the tool handle until the first ratchet position engages. See Figure 4.
6. Insert the properly stripped wire through the terminal and against the wire stop. See Figure 5.

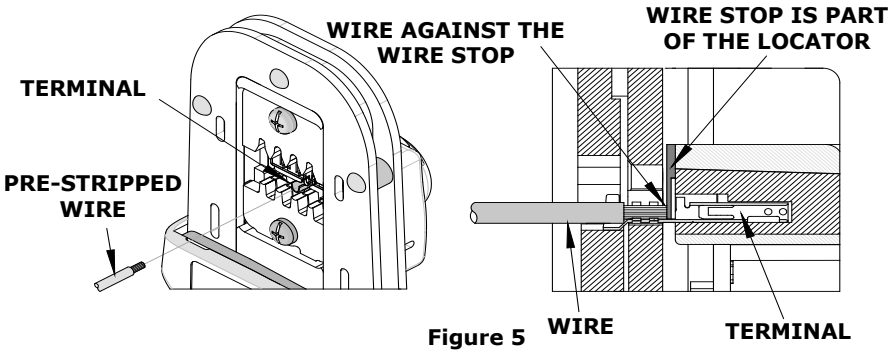

Figure 5

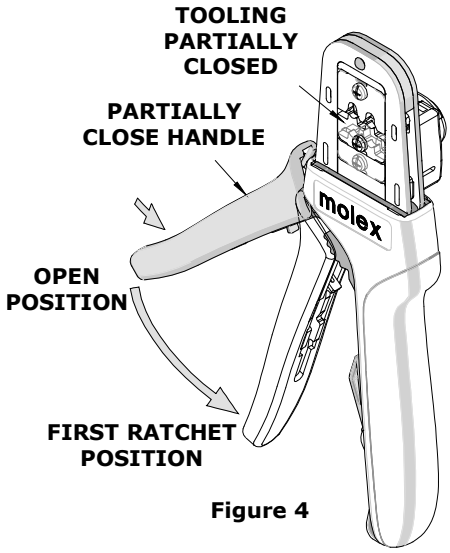

Figure 4

7. Crimp the terminal by squeezing the tool handles until the ratchet mechanism cycle has been completed. Release the handles to open the jaws.

Note: The tamper-proof ratchet action will not release the tool until it has been fully closed.

8. Remove the crimped terminal from the terminal locator by pulling on the wire.
9. Visually inspect the crimped terminal for proper crimp location.
10. On some large O.D. wires, it may not be possible to insert the wire with the tool partially closed. Those wires should be inserted with the hand tool in the open position. Insert the wire above the terminal in the punch and against the wire stop, and then close the tool. See Figure 6.

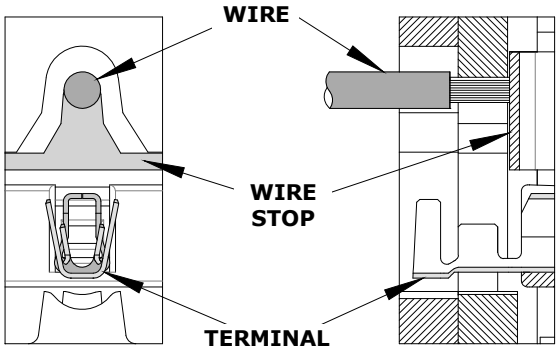

Figure 6

Locator Replacement

See the parts list on the last page of this document for the proper locator order number. Follow the steps below to replace the locator:

1. Open the hand crimp tool.
2. Squeeze gently on the lower area shown in Figure 7A with your thumb and index finger. The lower tabs of the locator should disengage from the hand tool.
3. Lift and pull away from the hand tool. The top locator hooks should slip out of the top slots easily. See Figure 7A.
4. To reinstall the new locator, make sure the hand tool is in the open position.
5. Press the center of the locator down as far as it will go as shown in Figure 7B.
6. Holding onto the lower part of the locator with your thumb and index finger, insert the locator's top hooks into the hand tool's top slots.

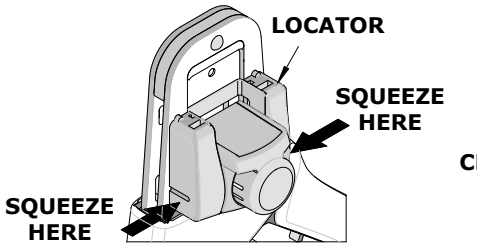

Figure 7A

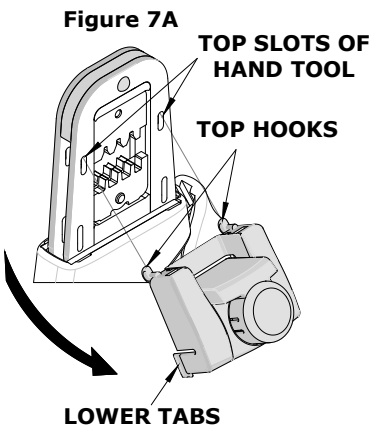

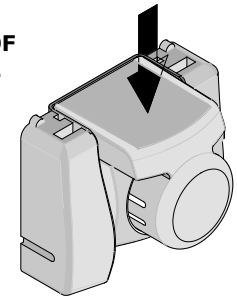

Figure 7B

7. Rotate the locator down and press the lower tabs into the two bottom slots of the hand tool. To secure the locator into place, the lower tabs must snap into place on the hand tool frame.

Right- or Left-Handed Operation

This hand tool has an added feature that can be converted from a right-handed application to a left-handed application. It is necessary to reverse the tooling along with the locator if using the left-handed application. Follow the steps below:

1. The locator must be removed before reversing the tooling.
2. Remove the M3 BHCS, which is holding the upper tooling.
3. Flip the upper tooling to the opposite side and replace the M3 BHCS. Make sure the small markings on the front and back of the hand tool frame match up and are on the outside of the hand tool frame. See Figures 8 and 9.
4. Do the same thing with the lower tooling and tighten the M3 screws. Be sure the small markings line up.
5. Reinstall the locator by following the instructions in the locator replacement section.

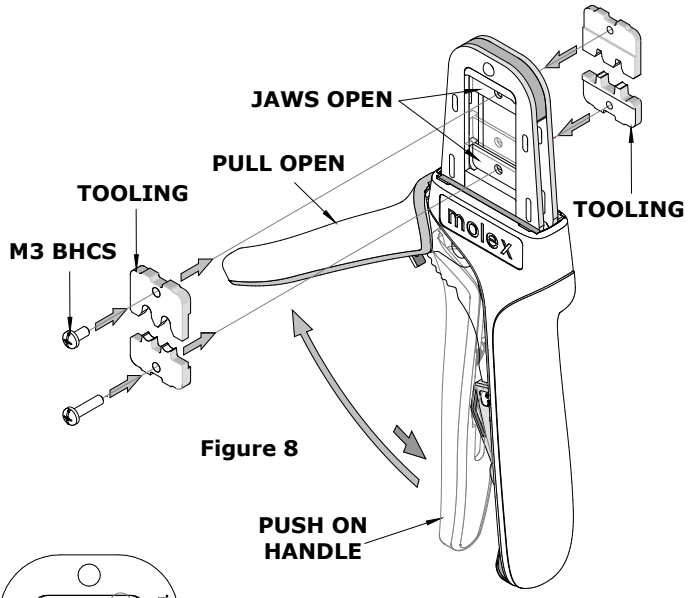

Figure 8

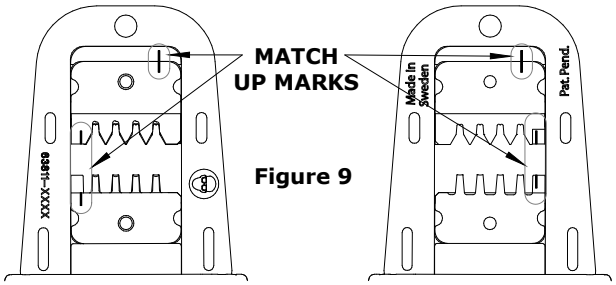

Figure 9

MAINTENANCE

It is recommended that each operator of the tool be made aware of and responsible for the following maintenance steps:

1. Remove dust, moisture and other contaminants with a clean brush or a soft, lint-free cloth.
2. Do not use any abrasive materials that could damage the tool.
3. Make certain all pins, pivot points and bearing surfaces are protected with a thin coat of high-quality machine oil. Do not oil excessively. The tool was engineered for durability, but like any other equipment, it needs cleaning and lubrication for a maximum service life of trouble-free crimping. Light oil (such as 30 weight automotive oil) used at the oil points every 5,000 crimps or 3 months will significantly enhance the tool life. See Figure 10.
4. Wipe excess oil from the hand tool, particularly from the crimping area. Oil transferred from the crimping area onto certain terminations may affect the electrical characteristics of an application.
5. When the tool is not in use, keep the handles closed to prevent objects from becoming lodged in the crimping dies, and store the tool in a clean, dry area.

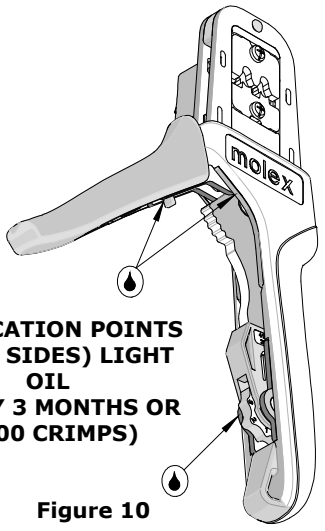

Figure 10

Miscrimps or Jams

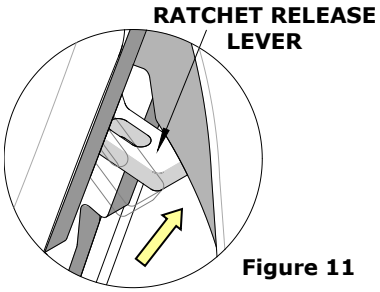

Figure 11

Should this tool ever become stuck or jammed in a partially closed position, **do not** force the handles open or closed. The tool will open easily by pressing up on the ratchet release lever in the movable handle. See Figure 11.

How to Adjust Tool Preload (See Figure 12)

This hand tool is factory preset to 25-45 pounds preload. It may be necessary over the life of the tool to adjust tool handle preload force. Listed below are the steps required to adjust the crimping force of the hand tool to obtain proper crimp conditions:

1. Hold the hand tool in the palm of your hand as shown in Figure 12. Using your index finger, squeeze the link toward the top of the hand tool frame. This will release the preload adjustment wheel.
2. Rotate the setting wheel counterclockwise (CCW) to increase handle force. The numbers will display higher. To decrease handle force, rotate the setting wheel clockwise (CW).
3. Release the link to lock the setting wheel in place.
4. Check the crimp specifications or conduct a pull test after tool handle preload force is adjusted.

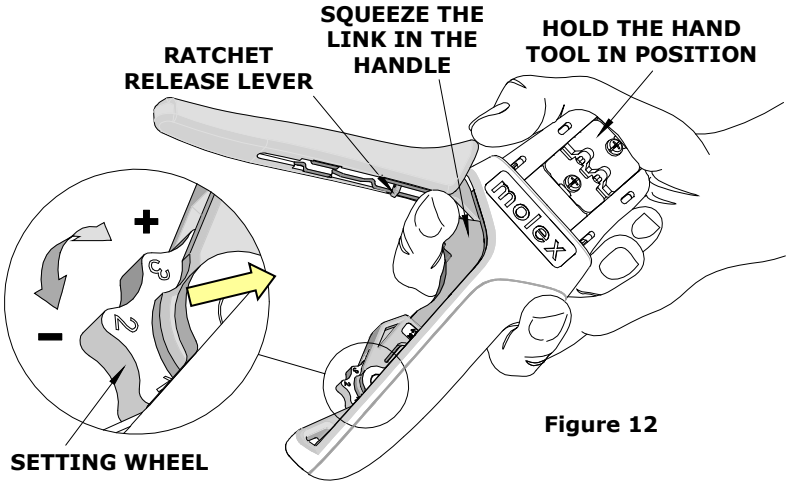

Figure 12

Warranty

This tool is for electrical terminal crimping purposes only. This tool is made of the best quality materials. All vital components are long life tested. All tools are warranted to be free of manufacturing defects for a period of 30 days. Should such a defect occur, Molex will repair or exchange the tool free of charge. This repair or exchange will not be applicable to altered, misused or damaged tools. This tool is designed for hand use only. Any clamping, fixturing or use of handle extensions voids this warranty.

CAUTION: Molex crimp specifications are valid only when used with Molex terminals and tooling.

CAUTIONS:

1. Manually powered hand tools are intended for low-volume use or field repair. This tool is NOT intended for production use. Repetitive use of this tool should be avoided.
2. Insulated rubber handles are not protection against electrical shock.
3. Wear eye protection at all times.
4. Use only the Molex terminals specified for crimping with this tool.

Certification

Molex does not certify or re-certify hand tools but rather supplies the following guidelines for customers to re-certify hand tools:

- This tool is qualified to pull force only. To re-certify, crimp a terminal to a wire that has been stripped 12.7mm (.500”) long so there is no crimping of the insulation. Clamp the terminal and pull the wire at a rate no faster than 25mm (1.00”) per minute. See the Molex website for the Quality Crimp Handbook for more information on pull testing.
- If the tool does not meet minimum pull force values, handle preload should be increased, and the pull test should be rerun. See How to Adjust Preload.
- When the hand tool is no longer capable of achieving minimum pull force, it should be taken out of service and replaced.

PARTS LIST

Item Number	Order Number	Description	Quantity
REF	**200218-4000**	**Hand Crimp Tool**	**Figure 13**
1	200218-4075	Locator Assembly	1
2	63810-0104	Spring, Return	1
3	63810-0105	Spring, Ratchet	1

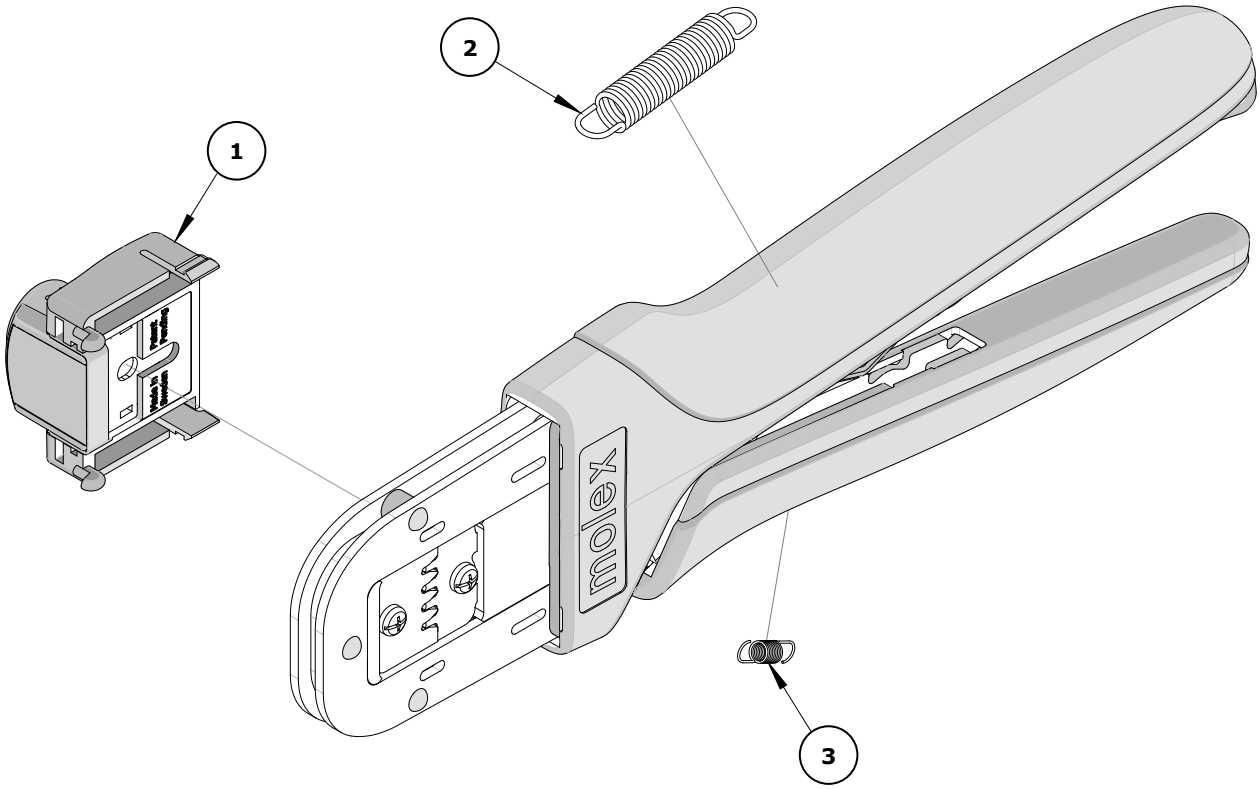

Figure 13

Application Tooling Support

Phone: (402) 458-TOOL (8665)
E-Mail: applicationtooling@molex.com
Website: www.molex.com/applicationtooling

Molex is a registered trademark of Molex, LLC in the United States of America and may be registered in other countries; all other trademarks listed herein belong to their respective owners.