Order No. 200218-0400

Application Tooling Specification

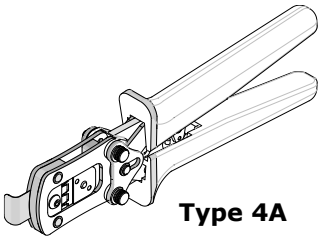

Type 4A

FEATURES

- A full cycle ratcheting hand tool ensures complete crimps
- Ergonomically designed soft handles
- Precisely designed crimping profiles with simple contact positioning
- Easy handling due to outstanding force ratio
- Modular Crimp Head is removable and can be used in the Air Powered Tool Order No. 63816-0100, accompanied by Air Powered Crimp Adapter (Order No. 63816-0700)
- Can also be used in the Battery Powered Tool Order No. 63816-0200 (110 V) or 63816-0250 (220 V), accompanied by Battery Powered Crimp Adapter (Order No. 63816-0600)
- This tool is IPC/WHMA-A-620 Class 2 compliant as indicated on page 2
- This tool is RoHS compliant

SCOPE

Products: 1.8mm SLD WTW Crimp Terminal for 22-24 AWG.

Terminal Series No.	Terminal Order No.		Wire Size		(2) Insulation Diameter		Strip Length	
	Loose Piece	(1) Reel	AWG	mm²	mm	In.	mm	In.
204226	—	204226-1001	22-24	—	0.95-1.40	.037-.055	3.50	.138
204301	—	204301-0001						
(1) This hand tool operates best with loose piece terminals. If reeled terminals are used, customers must cut the terminal from the carrier strip and are responsible for achieving the proper cut-off specification: 0.25mm (.010") maximum.								
(2) See IPC/WHMA-A-620 conditions on page 2.								

DEFINITION OF TERMS

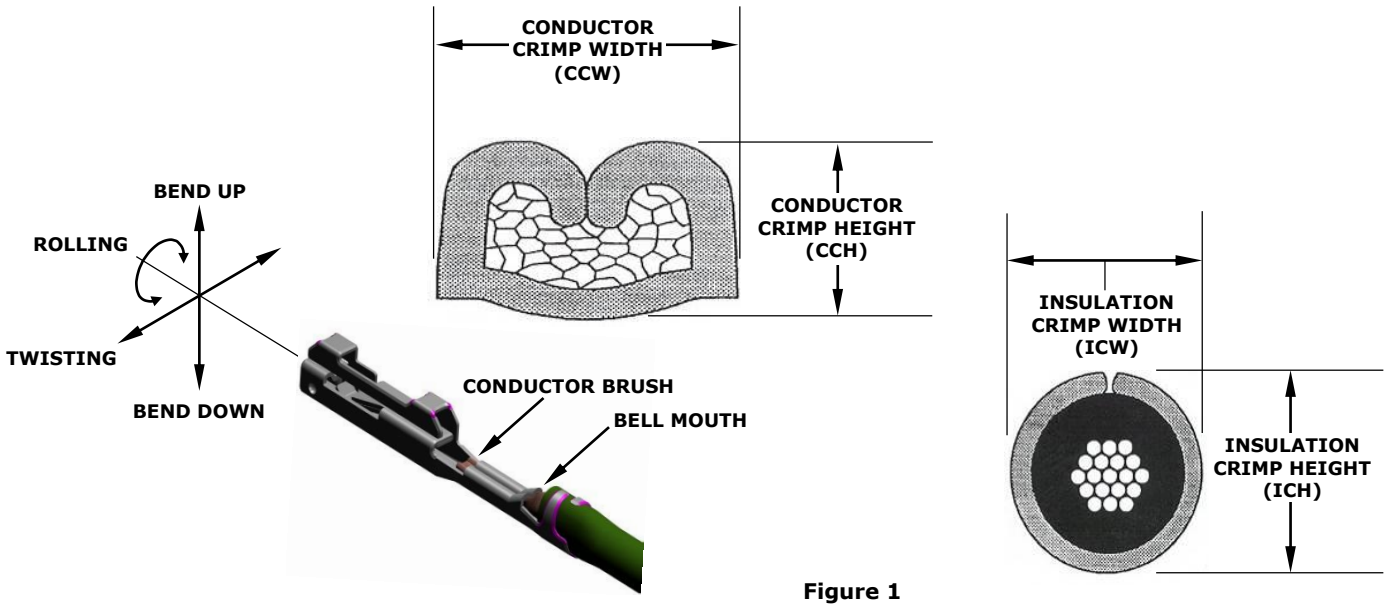

Figure 1

CRIMP SPECIFICATIONS

Terminal Series No.	Bell Mouth		Conductor Brush	
	mm	In.	mm	In.
204226	0.30-0.60	.012-.024	0.30-0.70	.012-.028
204301				

Terminal Series No.	Bend Up	Bend Down	Twist	Roll	Seam
	Degree Max.		Degree Max.		
204226	1	1	2	3	Seam shall not be open and no wire allowed out of the crimping area
204301					

After crimping, the conductor profiles should measure the following:

Terminal Series No.	Wire		Conductor Crimp				Insulation Crimp				Pull Force Minimum		♦♦ Profile	
			Height		Width		Height (Ref.)		Width (Ref.)					
	Wire Type	AWG	mm	In.	mm	In.	mm	In.	mm	In.	N	Lb.	A	B
204226	UL1061	22	0.69-0.75	.027-.030	1.03-1.09	.041-.043	1.25	.049	1.30	.051	35.6	8	X	
		24	0.64-.070	.025-.028	1.03-1.09	.041-.043	1.20	.047	1.30	.051	22.3	5		X
204301	UL1061	22	0.72-0.78	.028-.031	1.03-1.09	.041-.043	1.25	.049	1.30	.051	35.6	8	X	
		24	0.67-0.73	.026-.029	1.03-1.09	.041-.043	1.20	.047	1.30	.051	22.3	5		X

♦♦ **To achieve IPC-A-620 Class 2 crimps, the following overall wire insulation diameter ranges are recommended:**

- **Profile A:** 1.08-1.20mm
- **Profile B:** 1.08-1.20mm

Tool Qualification Notes

1. (Ref) means the dimension provided is approximate due to the wide range of wires, conductor stranding, insulation diameter, and insulation hardness.
2. An occasional pull force test should be performed. It must exceed the minimum pull force specification.
3. Pull force should be measured with no influence from the insulation crimp. To ensure this, strip the wire long enough so the terminal insulation grips do not contact the wire insulation.

OPERATION

Open the tool by squeezing the handles together. At the end of the closing stroke, the ratchet mechanism will release the handles, and the hand tool will spring open.

1. With the hand tool in the open position, pivot the terminal locator open by pulling up on the locator knob, and lift the wire stop blade. See Figure 2.
2. Insert the terminal into the correct profile until the terminal is fully seated and stops.
3. Gently pivot the locator closed.
4. Bring down the wire stop blade.
5. Make sure the wire stop blade is fully seated on the terminal behind the conductor grip section.

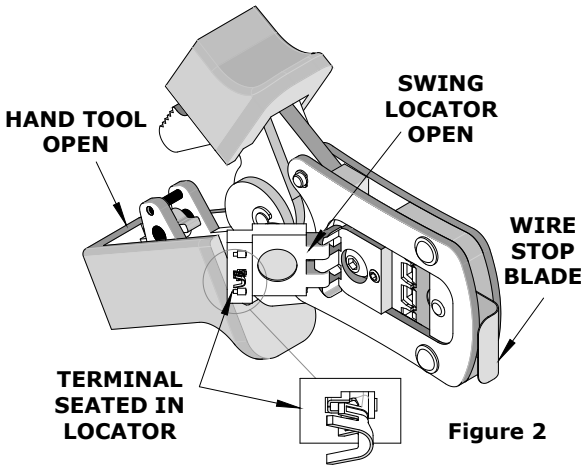

Figure 2

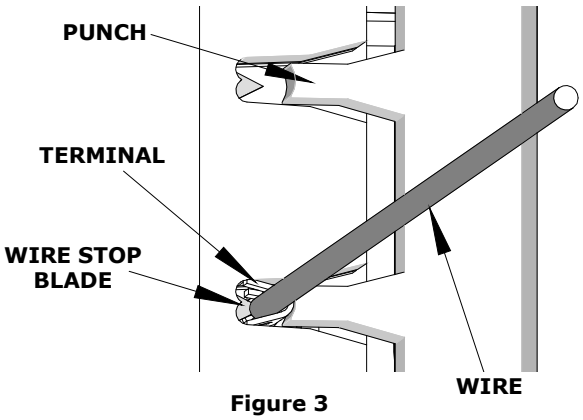

Figure 3

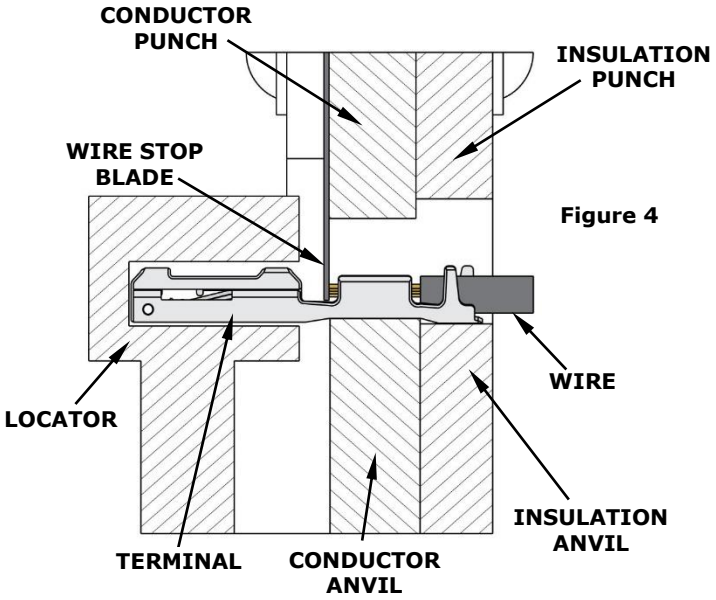

Figure 4

6. Slide the pre-stripped wire into the terminal. Make sure to aim the wire brush toward the tip point on the wire stop blade. See Figure 3. Align the wire so that it is parallel and sitting into the terminal. Maintain a light and constant pressure on the wire that is seated in the terminal at all times. (Do not let go of the wire.) Be sure to hold the wire and terminal in place until the terminal is fully crimped. See Figure 4.
7. Close the tool until the ratchet releases.
8. Lift the wire stop blade.
9. Carefully remove the crimped terminal.

Note: To maintain good brush control and a consistent bell mouth, the crimping instructions must be followed.

Note: The tamper-proof ratchet action will not release the tool until it has been fully closed.

TERMINAL LOCATOR REPLACEMENT

This section describes the procedure for changing the locator.

Removal

1. With the tool in the open position, pivot the terminal locator outward.
2. Remove the M4 BHCS. See Figure 5.

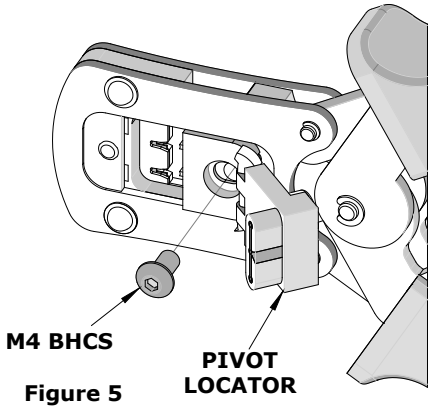

Figure 5

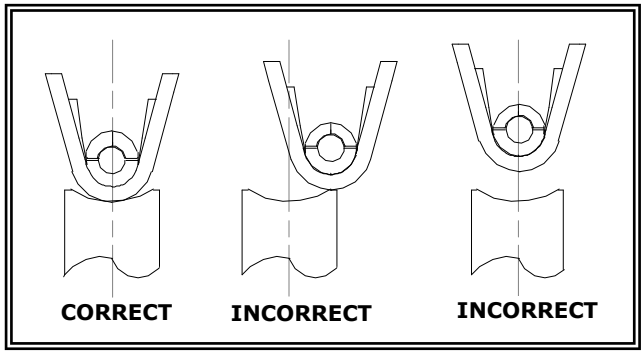

Figure 6

Installation

1. Place the locator on the hand tool. Install the M4 BHCS. See Figure 5.
2. Tighten the screw enough to hold the locator. Make sure the locator can still float freely with hand pressure.
3. Insert the proper terminal into the correct profile slot until the terminal is fully seated and stops. Then, gently pivot the locator closed.
4. With hand pressure, slowly slide the locator to the correct position. See Figure 6.
5. Gently pivot the locator open without disturbing the location.
6. Hold the locator firmly in place, and slowly tighten the M4 BHCS.

MAINTENANCE

It is recommended that each operator of the tool be made aware of and responsible for the following maintenance steps:

1. Remove dust, moisture and other contaminants with a clean brush or a soft, lint-free cloth.
2. Do not use any abrasive materials that could damage the tool.
3. Make certain all pins, pivot points and bearing surfaces are protected with a thin coat of high-quality machine oil. Do not oil excessively. The tool was engineered for durability, but like any other equipment, it needs cleaning and lubrication for a maximum service life of trouble-free crimping. Light oil (such as 30 weight automotive oil) used at the oil points every 5,000 crimps or 3 months will significantly enhance the tool life.
4. Wipe excess oil from the hand tool, particularly from the crimping area. Oil transferred from the crimping area onto certain terminations may affect the electrical characteristics of an application.
5. When the tool is not in use, keep the handles closed to prevent objects from becoming lodged in the crimping dies, and store the tool in a clean, dry area.

Miscrimps or Jams

Should this tool ever become stuck or jammed in a partially closed position, **Do Not** force the handles open or closed. The tool will open easily by pressing up on the ratchet release lever in the movable handle. See Figure 11.

Warranty

This tool is for electrical terminal crimping purposes only. This tool is made of the best quality materials. All vital components are long-life tested. All tools are warranted to be free of manufacturing defects for a period of 30 days. Should such a defect occur, Molex will repair or exchange the tool free of charge. This repair or exchange will not be applicable to altered, misused or damaged tools. This tool is designed for hand use only. Any clamping, fixturing or use of handle extensions voids this warranty.

CAUTION: Molex crimp specifications are valid only when used with Molex terminals and tooling.

CAUTIONS:

1. Manually powered hand tools are intended for low-volume use or field repair. This tool is NOT intended for production use. Repetitive use of this tool should be avoided.
2. Insulated rubber handles are not protection against electrical shock.
3. Wear eye protection at all times.
4. Use only the Molex terminals specified for crimping with this tool.

Notes

1. This tool should only be used for the terminals and wire gauges specified on this sheet.
2. This tool is not adjustable for crimp height. Variations in tools, terminals, wire stranding and insulation types may affect crimp height.
3. This tool is intended for standard conductor sizes. It may not give good insulation crimp support for all insulation sizes.
4. Molex does not repair hand tools (see warranty above). The replacement parts listed are the only parts available for repair. If the handles or crimp tooling are damaged or worn, a new tool must be purchased.
5. Pull force should be used as the final criterion for an acceptable crimp. Pull force is measured with no influence from the insulation crimp. The insulation should be stripped long (1/2 in.) so the insulation grips on the terminal do not grip the wire insulation or the conductor. Refer to Molex Quality Crimping Handbook 63800-0029 for additional information on crimping and crimp testing.
6. Molex does not certify crimp hand tools.

CAUTION: Molex crimp specifications are valid only when used with Molex terminals and tooling.

APPLICATIONS FOR THE MODULAR CRIMP HEAD

WARNING: NEVER operate, service, install or adjust this Modular Crimp Head without proper instruction and without first reading and understanding the instructions in the proper manual or specification sheet. See chart below for the correct manual or specification sheet.

WARNING: NEVER install tooling or service this tool while it is plugged into any power source. Disconnect the power by unplugging, or turn off the actuator from its power source.

CAUTION: Keep fingers away from the crimping area when operating this tool. It may cause severe injury.

CAUTION: Wear safety glasses when operating or serving this tool.

The chart below shows all applications for this Modular Crimp Head:

Modular Crimp Head Order No.	Tool Order No.	Tool Description	Adapter Order No.	Adapter Description	Figure No.
200218-0470	63816-0000	Hand Crimp Frame (Short)	—	—	6
	63816-0050	Hand Crimp Frame (Long)	—	—	6
	63816-0200	Battery Power Tool (110 V)	63816-0600	Battery Power Crimp Adapter	7
	63816-0250	Battery Power Tool (220 V)	63816-0600	Battery Power Crimp Adapter	7
	63816-0100	Air Power Tool	63816-0700	Air Power Crimp Adapter	8

Applications for the Modular Crimp Head

Hand Crimp Tool	Battery Powered Tool	Air Powered Tool
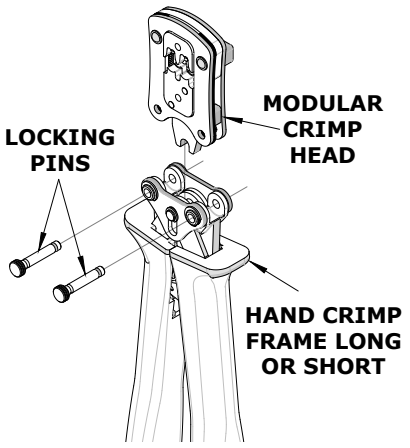	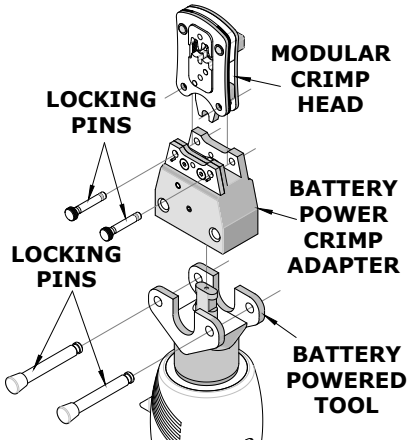	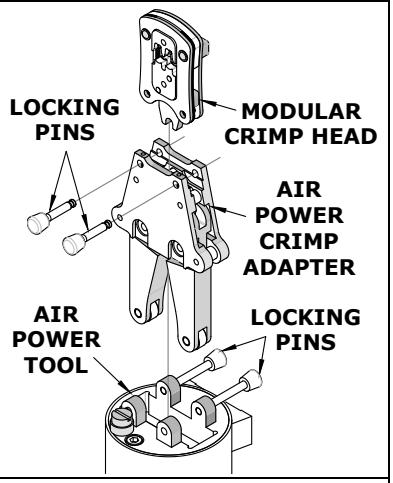
Figure 7	**Figure 8**	**Figure 9**

PARTS LIST

Item Number	Order Number	Description	Quantity
1	200218-0470	Modular Crimp Head	1
2	63816-0000	Hand Crimp Frame (Short)	1
3	200218-0475	Locator	1
4	63816-0001	Locking Pin	2
5	63600-0525	Handle Spring	1
6	63600-0520	Crimping Spring	2
7	—	M4 x 5 Long Nylon Insert Hex Nut	1*
*Available from an Industrial Supply Company.			

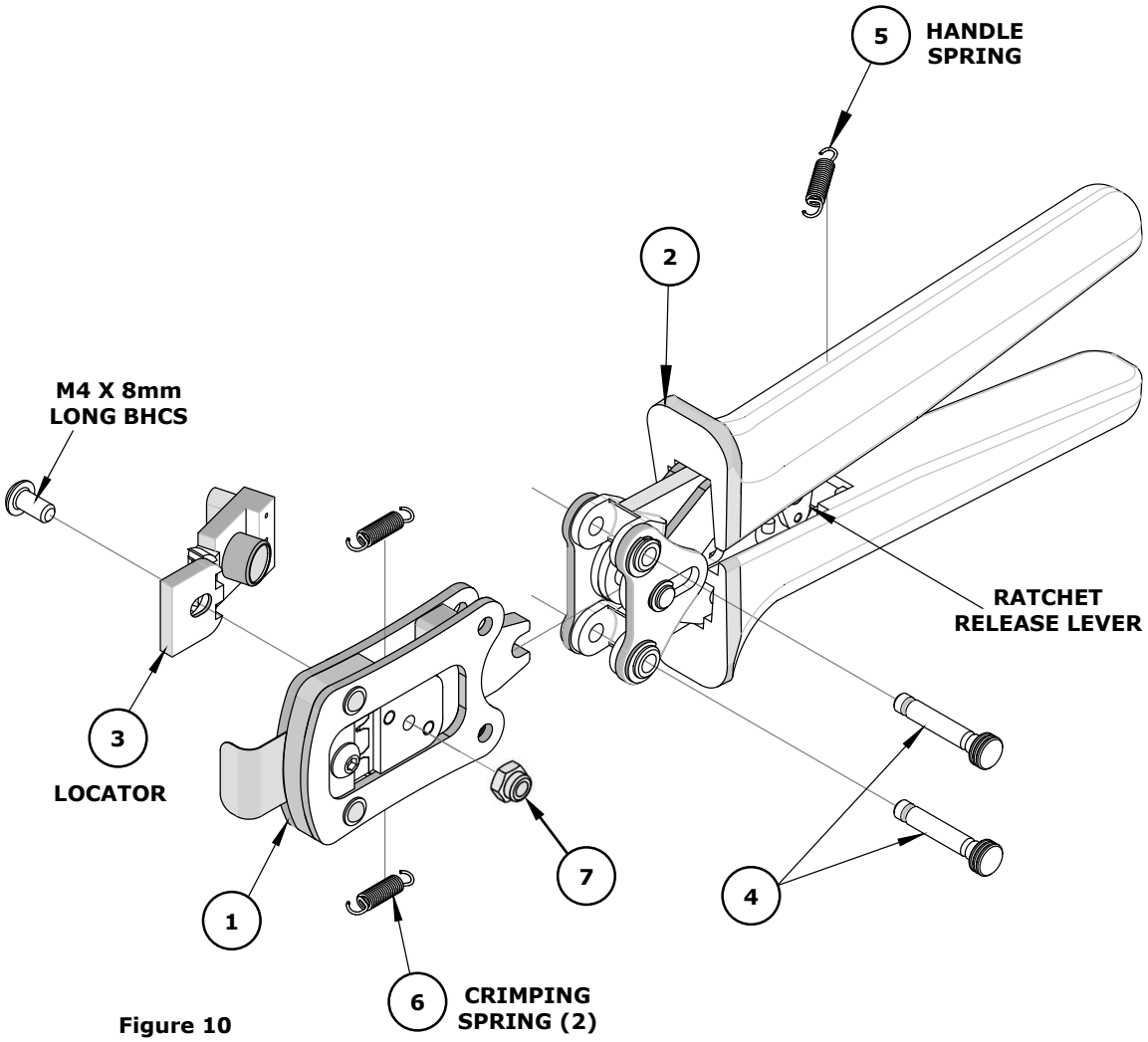

Figure 10

Application Tooling Support

Phone: (402) 458-TOOL (8665)
E-Mail: applicationtooling@molex.com
Website: www.molex.com/applicationtooling

Molex is a registered trademark of Molex, LLC in the United States of America and may be registered in other countries; all other trademarks listed herein belong to their respective owners.