THIS DRAWING IS UNPUBLISHED. RELEASED FOR PUBLICATION -,- .
© COPYRIGHT - BY TYCO ELECTRONICS CORPORATION. ALL INTERNATIONAL RIGHTS RESERVED.

LOC	DIST
—	—

REVISIONS

P	LTR	DESCRIPTION	DATE	DWN	APVD
	A1	REVISED PER ECO-09-017426	8/26/09	SS	CR

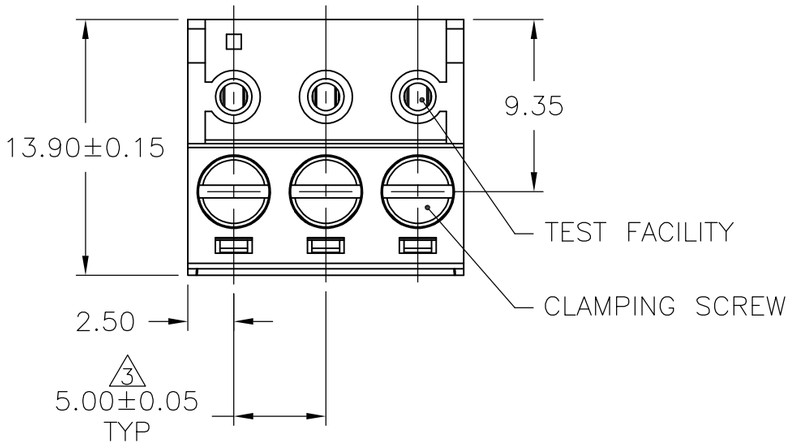

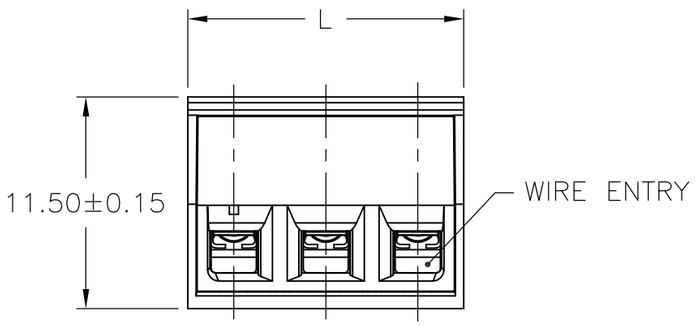

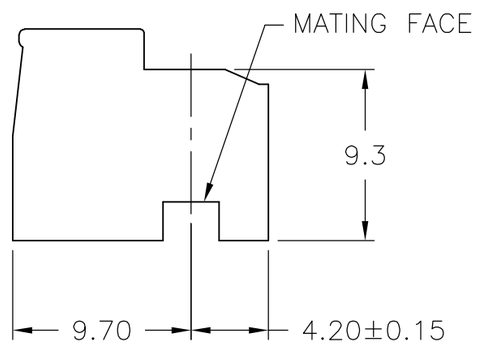

1. MATERIALS AND FINISH
   HOUSING : PA 6.6, UL 94-V0, COLOR GRAY.
   CLAMP : BRASS, NICKEL PLATED
   TERMINAL : BRASS, TIN PLATED
   CONTACT SPRING : PHOSPHOR BRONZE, TIN PLATED
   CLAMPING SCREW : M3, BRASS, NICKEL PLATED

2. WIRE SIZE RANGE: 14 – 30 AWG

3. NOT CUMULATIVE TOLERANCE

4. END TO END STACKABLE W/O LOSS OF CENTERLINE SPACING.

DIM "A"	NO OF POS	PART NUMBER
125.0	25	2-1546226-5
120.0	24	2-1546226-4
115.0	23	2-1546226-3
110.0	22	2-1546226-2
105.0	21	2-1546226-1
100.0	20	2-1546226-0
95.0	19	1-1546226-9
90.0	18	1-1546226-8
85.0	17	1-1546226-7
80.0	16	1-1546226-6
75.0	15	1-1546226-5
70.0	14	1-1546226-4
65.0	13	1-1546226-3
60.0	12	1-1546226-2
55.0	11	1-1546226-1
50.0	10	1-1546226-0
45.0	9	1546226-9
40.0	8	1546226-8
35.0	7	1546226-7
30.0	6	1546226-6
25.0	5	1546226-5
20.0	4	1546226-4
15.0	3	1546226-3
10.0	2	1546226-2

THIS DRAWING IS A CONTROLLED DOCUMENT.

DIMENSIONS: mm

TOLERANCES UNLESS OTHERWISE SPECIFIED:

0 PLC	± –
1 PLC	± 0.3
2 PLC	± 0.25
3 PLC	± –
4 PLC	± –
ANGLES	± 1°

MATERIAL – 1

FINISH –

DWN S SCHLEGEL 26AUG2009
CHK C RICHARD 8/26/09
APVD C RICHARD 8/26/09
PRODUCT SPEC —
APPLICATION SPEC —
WEIGHT —

CUSTOMER DRAWING

Tyco Electronics

Tyco Electronics Corporation
Harrisburg, PA 17105-3608

NAME
TERMINAL BLOCK PLUG 90/270 DEGREE, 5.0mm PITCH
—

SIZE	CAGE CODE	DRAWING NO	RESTRICTED TO
A3	00779	C-1546226	—

SCALE	SHEET	REV
3:1	1 OF 1	A1