THIS DRAWING IS UNPUBLISHED. RELEASED FOR PUBLICATION 20
© COPYRIGHT 20 BY TYCO ELECTRONICS CORPORATION. ALL RIGHTS RESERVED.

LOC	DIST
FT	0

REVISIONS

P	LTR	DESCRIPTION	DATE	DWN	APVD
	A	RELEASED	-	-	-

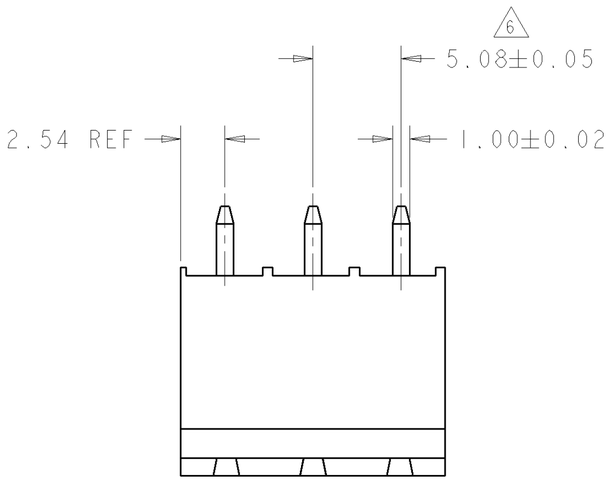

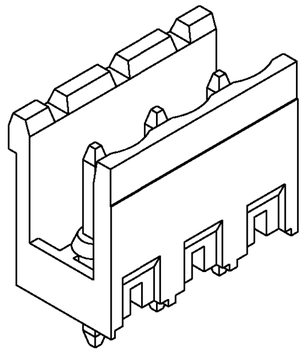

1546213-3 AS SHOWN

1. MATERIALS AND FINISH:
   HOUSING: PA 6-6, UL 94-V0, COLOR GRAY.
   TERMINAL: PHOSPHOR BRONZE, FINISH: TIN PLATED.
2. SUITABLE FOR 1,6-2,4mm PC BOARD THICKNESS.
3. END-TO-END STACKABLE WITHOUT LOSS OF CENTERLINE SPACING.
4. RECOGNIZED UNDER THE COMPONENT PROGRAM OF UNDERWRITERS LABORATORIES INC. FILE N°E60677.
5. IMQ CERTIFICATE WITH SURVEILLANCE IN CONFORMITY WITH IEC 998-1/998-2-1.
6. NOT CUMULATIVE TOLERANCE.

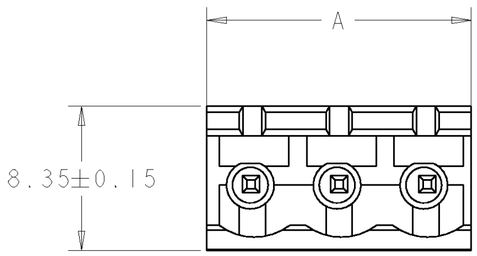

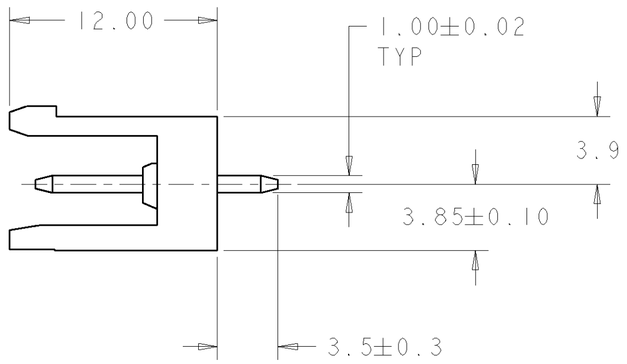

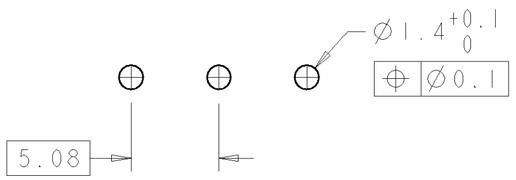

RECOMMENDED PC BOARD LAYOUT

A	NO OF POSN	PART NUMBER
127.00	25	2-1546213-5
121.92	24	2-1546213-4
116.84	23	2-1546213-3
111.76	22	2-1546213-2
106.68	21	2-1546213-1
101.60	20	2-1546213-0
96.52	19	1-1546213-9
91.44	18	1-1546213-8
86.36	17	1-1546213-7
81.28	16	1-1546213-6
76.20	15	1-1546213-5
71.12	14	1-1546213-4
66.04	13	1-1546213-3
60.96	12	1-1546213-2
55.88	11	1-1546213-1
50.80	10	1-1546213-0
45.72	9	1546213-9
40.64	8	1546213-8
35.56	7	1546213-7
30.48	6	1546213-6
25.40	5	1546213-5
20.32	4	1546213-4
15.24	3	1546213-3
10.16	2	1546213-2

THIS DRAWING IS A CONTROLLED DOCUMENT FOR TYCO ELECTRONICS CORPORATION IT IS SUBJECT TO CHANGE AND THE CONTROLLING ENGINEERING ORGANIZATION SHOULD BE CONTACTED FOR THE LATEST REVISION.

DIMENSIONS: mm

TOLERANCES UNLESS OTHERWISE SPECIFIED:
0 PLC ±-
1 PLC ±.3
2 PLC ±.25
3 PLC ±-
4 PLC ±-
ANGLES ±2

MATERIAL 1 -
FINISH 1 -

DWN S.WELDON 02JUN2003
CHK C.RICHARD 02JUN2003
APVD C.RICHARD 02JUN2003
PRODUCT SPEC 108-20166
APPLICATION SPEC 114-20079
WEIGHT -

BUCHANAN
Tyco Electronics
Harrisburg, PA 17105-3608

NAME TERMINAL BLOCK HEADER ASSEMBLY 180° OPEN ENDS, STACKING 5.08mm PITCH

SIZE	CAGE CODE	DRAWING NO	RESTRICTED TO
A2	00779	C-1546213	-

CUSTOMER DRAWING | SCALE 3:1 | SHEET 1 OF 1 | REV A