THIS DRAWING IS UNPUBLISHED. RELEASED FOR PUBLICATION -,- .
© COPYRIGHT - BY TYCO ELECTRONICS CORPORATION. ALL RIGHTS RESERVED.

LOC	DIST
AD	00

REVISIONS

P	LTR	DESCRIPTION	DATE	DWN	APVD
	B1	REVISED PER ECO-05-009527	16MAY06	GS	MS

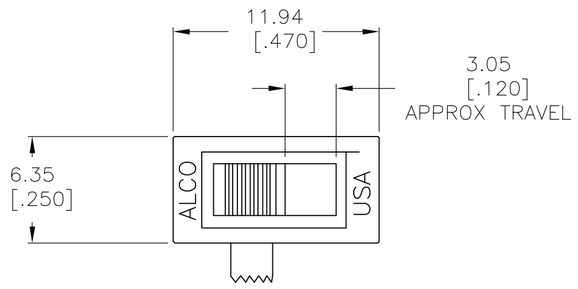

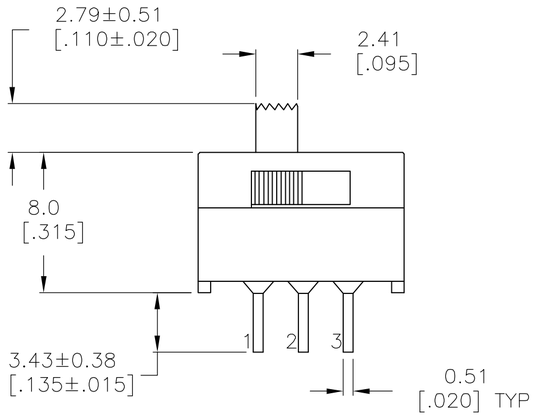

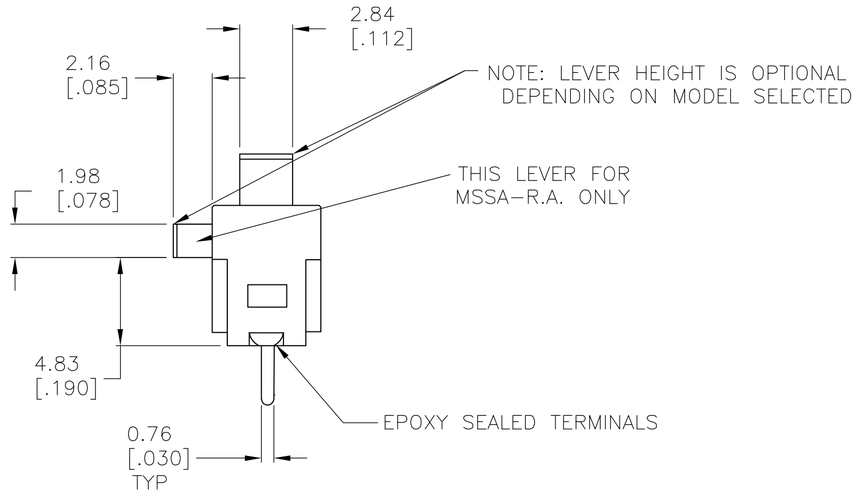

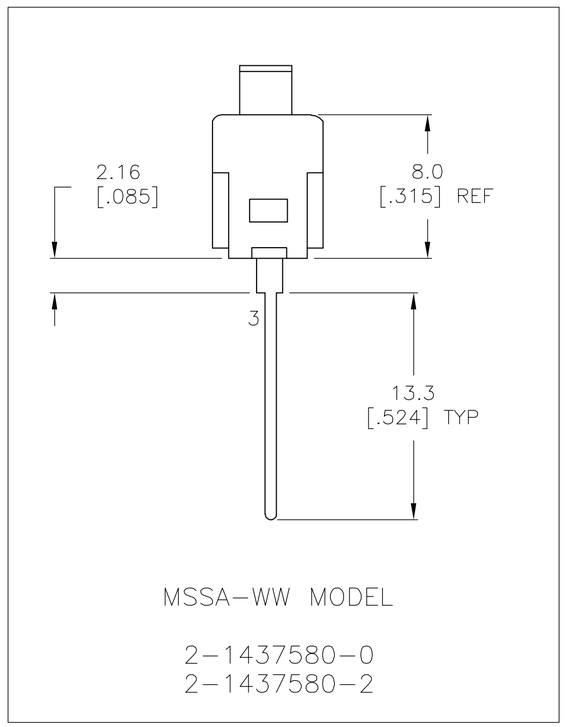

MSSA-WW MODEL

2-1437580-0
2-1437580-2

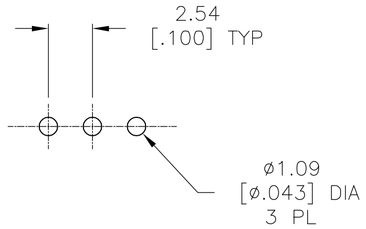

P.C. HOLE LAYOUT

SPECIFICATIONS:
BREAK-BEFORE-MAKE

MATERIAL:
SLIDER, GLASS FILLED NYLON, UL94-HB, BLACK.
BASE, GLASS FILLED PBT, BLUE.
COVER, GLASSED FILLED PBT, BLUE.
SLIDE PLATE, STAINLESS STEEL.
ACTUATOR, PPS, BLACK.
ROCKER CONTACT(GOLD), COPPER ALLOY, GOLD OVER NICKEL PLATING.
ROCKER CONTACT(SILVER), COPPER ALLOY PLUS COINED SILVER.
FIXED CONTACT/TERMINAL (GOLD), COPPER ALLOY, GOLD OVER NICKEL PLATE.
FIXED CONTACT/TERMINAL(SILVER), COPPER ALLOY PLUS COINED SILVER, GOLD OVER NICKEL PLATE.

ELECTRICAL:
CONTACT RATING(SILVER)- 3A@115V AC OR 1.5A@230V AC
CONTACT RATING(GOLD)- .4VA MAX@20V DC OR PEAK AC
INITIAL CONTACT RESISTANCE - 20 MILLIOHMS MAX.
INSULATION RESISTANCE- 1000 MEGOHMS MIN @ 500V DC
DIELECTRIC STRENGTH- 500 V RMS@SEA LEVEL.
LIFE EXPECTANCY- 30,000 OPERATIONS.

MECHANICAL:
OPERATING FORCE- 600+/-300 GRAMS.
TRAVEL-.120

ENVIRONMENTAL:
OPERATING TEMPERATURE- -20°C TO +65°C
STORAGE TEMPERATURE- -40°C TO +100°C
SOLDER HEAT RESISTANCE- PER 109-202, CONDITION B.
SOLDERABILITY PER EIA 364-52, CLASS 2, CATAGORY 1.

2,1	OFF	2,3	SILVER	MSSA104E	2-1437580-6
2,1	NONE	2,3	SILVER	MSSA104DRA	2-1437580-5
2,1	NONE	2,3	SILVER	MSSA104D1	2-1437580-4
2,1	NONE	2,3	SILVER	MSSA104D	2-1437580-3
2,1	OFF	2,3	GOLD	MSSA101EGWW	2-1437580-2
2,1	OFF	2,3	GOLD	MSSA101EGRA	2-1437580-1
2,1	NONE	2,3	GOLD	MSSA101DGWW	2-1437580-0
2,1	NONE	2,3	GOLD	MSSA101DGRA	1-1437580-9
2,1	NONE	2,3	GOLD	MSSA101DG1	1-1437580-8
2,1	NONE	2,3	GOLD	MSSA101DG	1-1437580-7
1 2 3	1 2 3	1 2 3	PLATING	ALCO PART NO.	TYCO PART NO.

THIS DRAWING IS A CONTROLLED DOCUMENT.

DIMENSIONS: mm [INCHES]

TOLERANCES UNLESS OTHERWISE SPECIFIED:
0 PLC ± -
1 PLC ± -
2 PLC ± -
3 PLC ± 0.25[.010]
4 PLC ± -
ANGLES ± -

MATERIAL -
FINISH -

DWN ROBERT.J.WINGROVE 23DEC80
CHK - 30DEC80
APVD - 05JAN81
PRODUCT SPEC -
APPLICATION SPEC -
WEIGHT -

tyco Electronics
Tyco Electronics Corporation
Harrisburg, Pa 17105-3608

NAME
SLIDE SWITCH SP & SPRA

SIZE	CAGE CODE	DRAWING NO	RESTRICTED TO
A2	00779	C-1-1437580-7	-

CUSTOMER DRAWING | SCALE 4:1 | SHEET 1 OF 1 | REV B1

1-1437580-7