THIS DRAWING IS UNPUBLISHED. RELEASED FOR PUBLICATION -,- .
© COPYRIGHT - BY TYCO ELECTRONICS CORPORATION. ALL RIGHTS RESERVED.

LOC	DIST
AD	00

REVISIONS

P	LTR	DESCRIPTION	DATE	DWN	APVD
	A3	REVISED PER ECO-10-019941	16FEB11	HMR	MM

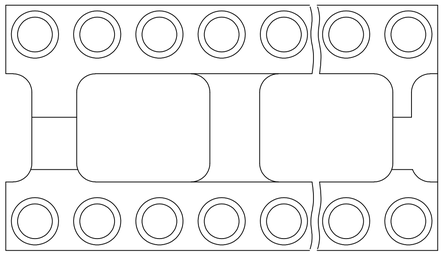

FIG. 1

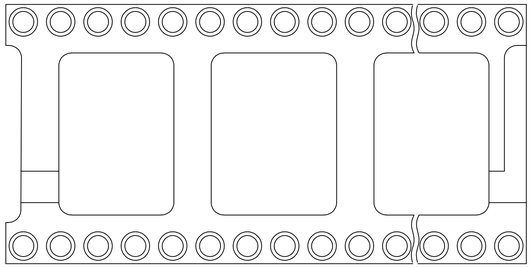

FIG. 2

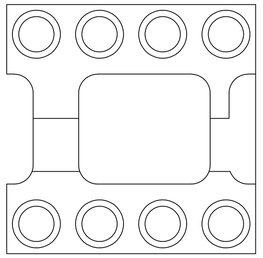

FIG. 3
(8 POS ONLY)

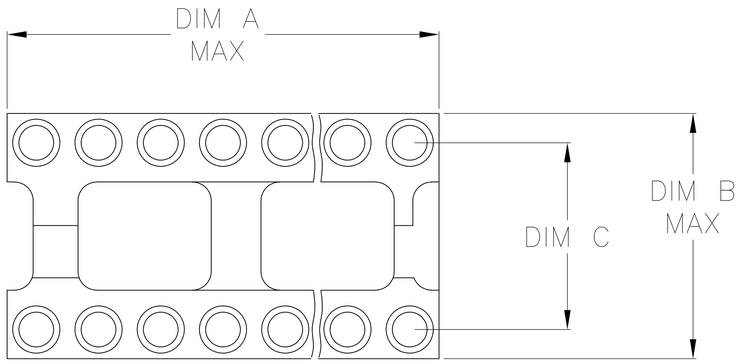

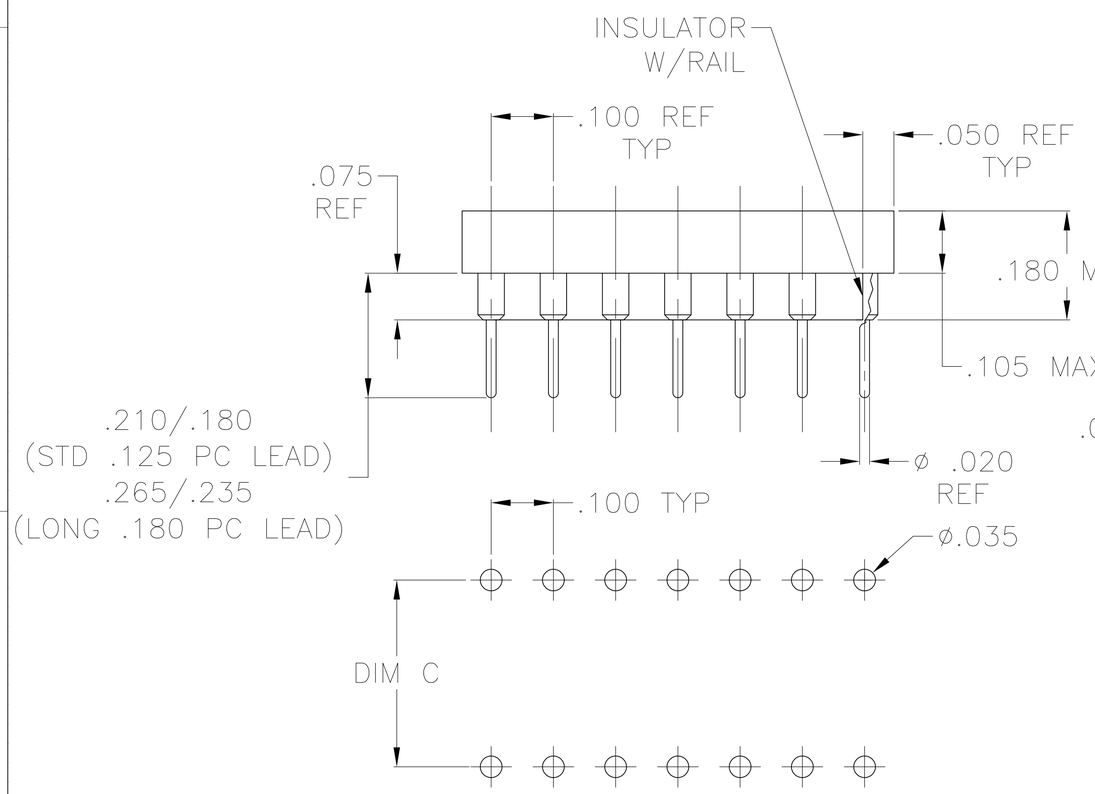

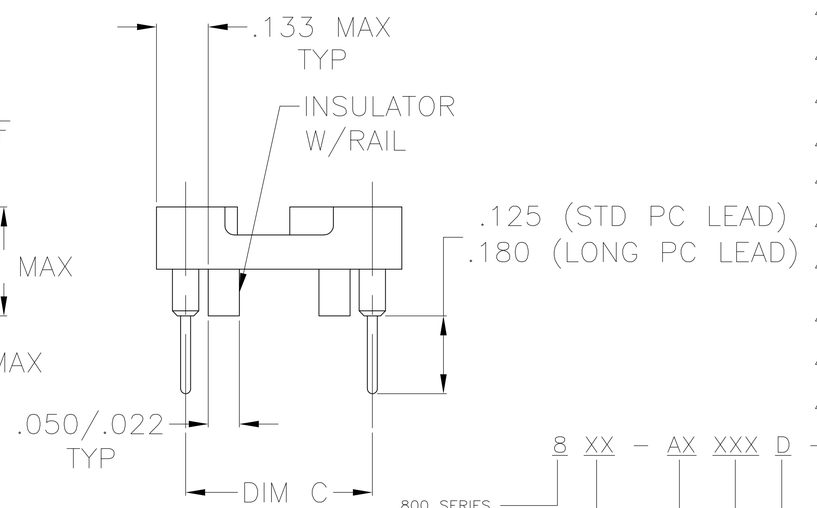

P.C.B. HOLE LAYOUT
TOLERANCE ±.003

△1 MATERIALS:
INSULATOR: POLYESTER, UL RATED 94V-0
CONTACT:
800 & 1800 SERIES CONTACT: 4 BEAM, COPPER ALLOY, MACHINED (PREMIUM VERSION) OR FORMED (ECONOMY VERSION, WITH SUFFIX -ES OR -ESL).
800 SERIES HIGH RETENTION CONTACT: 4 BEAM, COPPER ALLOY, MACHINED.
1000 SERIES CONTACT: 6 BEAM, COPPER ALLOY, MACHINED (LOW INSERTION FORCE SERIES)
SLEEVE- ALL SERIES: COPPER ALLOY, FORMED

△2 ELECTRICAL:
CONTACT RESISTANCE: 10 MILLIOHMS MAX
CONTACT RATING: 3 AMPS
CAPACITANCE: 1.0 pF PER MIL-STD-202, METHOD 305
INSULATION RESISTANCE: 5000 OHMS MIN @ 500 VDC PER MIL-STD-1344, METHOD 3003.1
DIELECTRIC WITHSTANDING VOLTAGE: 1000 VOLTS (RMS) PER MIL-STD-1344, METHOD 3001.1

△3 MECHANICAL:
AFTER INSERTION FORCE: 37 GRAMS AVG (6 BEAM CONTACT) 134 GRAMS AVG (4 BEAM PREMIUM) 179 GRAMS AVG (4 BEAM ECONOMY) AND 334 GRAMS AVG (HIGH RETENTION)
AFTER WITHDRAWAL FORCE: 15 GRAMS AVG (6 BEAM CONTACT) 63 GRAMS AVG (4 BEAM PREMIUM OR ECONOMY) AND 245 GRAMS AVG (HIGH RETENTION)

△4 ENVIRONMENTAL:
OPERATING TEMPERATURE: -55°C TO -105°C

△5 PLATING: 25µ" MIN GOLD OVER 50µ" MIN NICKEL CONTACT WITH 5µ" MIN GOLD OVER 50µ" MIN NICKEL SLEEVE.

△6 PLATING: 25µ" MIN GOLD OVER 50µ" MIN NICKEL CONTACT WITH 80µ" MIN TIN-LEAD OVER 50µ" MIN COPPER SLEEVE.

△7 PLATING: 80µ" MIN TIN-LEAD OVER 75µ" MIN COPPER CONTACT WITH 180µ" MIN TIN-LEAD OVER 75µ" MIN NICKEL SLEEVE.

△8 PLATING: 5µ" MIN GOLD FLASH OVER 50µ" MIN NICKEL CONTACT WITH 5µ" MIN GOLD FLASH OVER 50µ" MIN NICKEL SLEEVE.

△9 PLATING: 5µ" MIN GOLD FLASH OVER 50µ" MIN NICKEL CONTACT WITH 80µ" MIN TIN-LEAD OVER 50µ" MIN COPPER SLEEVE.

△10 PLATING: 7.5µ" MIN GOLD OVER 50µ" MIN NICKEL CONTACT WITH 80µ" MIN TIN-LEAD OVER 50µ" MIN COPPER SLEEVE.

△11 PRELIMINARY PART - NOT RELEASED FOR PRODUCTION.

△12 806-AGXXD-XXX SERIES IS SUPERSEDED BY 506-AGXXD-XXX SERIES (REFER TO CUSTOMER DRAWING 1437532-2)

△13 PLATING: 25µ" MIN GOLD OVER 50µ" MIN NICKEL CONTACT WITH 80µ" MIN MATTE TIN OVER 50µ" MIN COPPER SLEEVE.

△14 PLATING: 80µ" MIN MATTE TIN OVER 75µ" MIN COPPER CONTACT WITH 180µ" MIN MATTE TIN OVER 75µ" MIN NICKEL SLEEVE.

△15 PLATING: 5µ" MIN GOLD FLASH OVER 50µ" MIN NICKEL CONTACT WITH 80µ" MIN MATTE TIN OVER 50µ" MIN COPPER SLEEVE.

△16 PLATING: 7.5µ" MIN GOLD OVER 50µ" MIN NICKEL CONTACT WITH 80µ" MIN MATTE TIN OVER 50µ" MIN COPPER SLEEVE.

△17 OBSOLETE PARTS: OBSOLETE CIS STREAMLINING PER D.RENAUD/D.SINISI

8 XX - AX XXX D - XXX - LF

800 SERIES
POSITIONS

AG = INSULATOR
AR = INSULATOR WITH RAILS (ALMOST RUN THE LENGTH UNDER THE INSULATOR INSIDE THE CONTACT ROWS, .075 REF HIGH & .045 REF WIDE)

LSG STYLE AND TAIL CONFIGURATION

D = PC TAIL STANDARD

BLANK = MACHINED CONTACT
ES = FORMED CONTACT, GOLD PLATE, NOTE 1
ESL = FORMED CONTACT, LOW GOLD PLATE, 5µIN MAX

LF= LEAD FREE

THIS DRAWING IS A CONTROLLED DOCUMENT.

DIMENSIONS: INCHES

TOLERANCES UNLESS OTHERWISE SPECIFIED:
0 PLC ± -
1 PLC ± -
2 PLC ± -
3 PLC ± .005
4 PLC ± -
ANGLES ± -

MATERIAL -
FINISH -

DWN	R BROWN	06MAY04
CHK	K WRIGHT	06MAY04
APVD	K WRIGHT	06MAY04
PRODUCT SPEC	-	
APPLICATION SPEC	-	
WEIGHT	-	

Tyco Electronics
Tyco Electronics Corporation
Harrisburg, Pa 17105-3608

NAME: DIP SOCKET, 800 SERIES

SIZE	CAGE CODE	DRAWING NO	RESTRICTED TO
A1	00779	C-1437539-2	-

CUSTOMER DRAWING | SCALE 1:1 | SHEET 1 OF 4 | REV A3

THIS DRAWING IS UNPUBLISHED. RELEASED FOR PUBLICATION -;- .
© COPYRIGHT - BY TYCO ELECTRONICS CORPORATION. ALL RIGHTS RESERVED.

LOC	DIST
AD	00

REVISIONS

P	LTR	DESCRIPTION	DATE	DWN	APVD
	–	SEE SHEET 1	–	–	–

800 SERIES MACHINED PREMIUM CONTACT LEAD FREE PART NUMBER TABLE

	HIGH RETENTION	13	.895/.905	1.000	3.200	2	864-AG34D-LF	5-6437538-4
	HIGH RETENTION	13	.595/.605	.700	2.400	2	848-AG34D-LF	9-1437538-5
OBSOLETE	~~W/RAILS~~	13					~~840-AR11D-LF~~	~~8-1437538-6~~
	.180 PC LEAD	14	.595/.605	.700	2.000	2	840-AG43D-LF	8-1437538-4
	HIGH RETENTION	13					840-AG34D-LF	8-1437538-3
	HIGH RETENTION	14	.595/.605	.700	1.600	2	832-AG38D-LF	9-6437533-4
	HIGH RETENTION	13					832-AG34D-LF	2-6437538-5
OBSOLETE	~~W/RAILS~~	14					~~828-AR12D-LF~~	~~6-6437538-9~~
OBSOLETE	~~W/RAILS~~	13	.595/.605	.700	1.400	1	~~828-AR11D-LF~~	~~1-6437538-6~~
	.180 PC LEAD	14					828-AG43D-LF	6437538-4
OBSOLETE	~~HIGH RETENTION~~	13					~~828-AG34D-LF~~	~~1-6437538-3~~
OBSOLETE	~~W/RAILS~~	13	~~.295/.305~~	~~.400~~	~~1.200~~	~~1~~	~~824-AR31D-LF~~	~~5-6437538-1~~
OBSOLETE	~~W/RAILS~~	13	~~.595/.605~~	~~.700~~	~~1.200~~	~~1~~	~~824-AR11D-LF~~	~~9-6437537-9~~
	.180 PC LEAD	13	.295/.305	.400	1.200	1	824-AG47D-LF	9-6437537-7
OBSOLETE	~~.180 PC LEAD~~	14	~~.395/.405~~	~~.500~~	~~1.200~~	~~1~~	~~824-AG446D-LF~~	~~9-6437537-6~~
	HIGH RETENTION	13	.595/.605	.700	1.200	1	824-AG34D-LF	9-6437537-5
	HIGH RETENTION	14	.295/.305	.400	1.200	1	824-AG338D-LF	9-6437537-4
	HIGH RETENTION	13				1	824-AG334D-LF	9-6437537-3
	.180 PC LEAD	14	.295/.305	.400	1.000	1	820-AG43D-LF	7-6437537-3
	HIGH RETENTION	13					820-AG34D-LF	7-6437537-2
OBSOLETE	~~.180 PC LEAD W/RAILS~~	13					~~818-AR44D-LF~~	~~4-6437539-9~~
OBSOLETE	~~W/RAILS~~	13	~~.295/.305~~	~~.400~~	~~.900~~	~~1~~	~~818-AR11D-LF~~	~~6-6437537-2~~
OBSOLETE	~~W/RAILS~~	13					~~816-AR11D-LF~~	~~5-6437537-4~~
	HIGH RETENTION	13	.295/.305	.400	.800	1	816-AG34D-LF	5-6437537-1
OBSOLETE	~~W/RAILS~~	13					~~814-AR11D-LF~~	~~3-6437537-5~~
	.180 PC LEAD	14	.295/.305	.400	.700	1	814-AG43D-LF	3-6437537-2
	HIGH RETENTION	13					814-AG34D-LF	3-6437537-1
OBSOLETE	~~W/RAILS~~	13					~~808-AR11D-LF~~	~~1-6437537-9~~
	.180 PC LEAD	14	.295/.305	.400	.400	3	808-AG43D-LF	6437537-5
	HIGH RETENTION	13					808-AG34D-LF	6437537-4
	COMMENTS	PLATING	C	B	A	FIG	AUGAT PART NO.	TE PART NO.

800 SERIES MACHINED PREMIUM CONTACT PART NUMBER TABLE

OBSOLETE	~~W/RAILS~~	6	~~.295/.305~~	~~.400~~	~~1.200~~	~~1~~	~~824-AR31D~~	~~0-1437538-1~~
17 OBSOLETE	W/RAILS	6	.595/.605	.700	1.200	1	824-AR11D	~~9-1437537-9~~
	–	6	.395/.405	.500	1.200	1	824-AG66D	9-1437537-8
17 OBSOLETE	.180 PC LEAD	6	.295/.305	.400	1.200	1	824-AG47D	~~9-1437537-7~~
	.180 PC LEAD	5	.595/.605	.700	1.200	1	824-AG45D	~~6-1437538-6~~
	.180 PC LEAD	7	.395/.405	.500	1.200	1	824-AG446D	~~9-1437537-6~~
	HIGH RETENTION	6	.595/.605	.700	1.200	1	824-AG34D	~~9-1437537-5~~
	HIGH RETENTION	5				1	824-AG33D	~~8-1437539-2~~
	HIGH RETENTION	7	.295/.305	.400	1.200	1	824-AG338D	9-1437537-4
	HIGH RETENTION	6				1	824-AG334D	9-1437537-3
	–	7				1	824-AG32D	9-1437537-2
	–	6				1	824-AG31D	8-1437537-9
	–	5				1	824-AG30D	8-1437537-7
	–	7	.395/.405	.500	1.200	1	824-AG14D	8-1437537-6
	–	7	.595/.605	.700	1.200	1	824-AG12D	8-1437537-5
	–	6				1	824-AG11D	8-1437537-2
	–	5				1	824-AG10D	8-1437537-1
	–	6	.295/.305	.400	1.100	1	822-AG11D	7-1437537-8
	–	5					822-AG10D	7-1437537-7
	W/RAILS	6	.295/.305	.400	1.000	1	820-AR11D	~~7-1437537-6~~
17 OBSOLETE	.180 PC LEAD	5					820-AG45D	~~7-1437537-5~~
	.180 PC LEAD	6					820-AG44D	~~7-1437537-4~~
	.180 PC LEAD	7					820-AG43D	~~7-1437537-3~~
	HIGH RETENTION	6					820-AG34D	~~7-1437537-2~~
	–	7					820-AG12D	6-1437537-9
	–	6					820-AG11D	6-1437537-6
	–	5					820-AG10D	6-1437537-4
	.180 PC LEAD W/RAILS	6	.295/.305	.400	.900	1	818-AR44D	~~4-1437539-9~~
17 OBSOLETE	W/RAILS	6					818-AR11D	~~6-1437537-2~~
	.180 PC LEAD	6					818-AG44D	~~6-1437537-1~~
	HIGH RETENTION S/B 5-1437537-7	6					818-AG34D	5-1437538-8
	–	7					818-AG12D	6-1437537-0
	–	6					818-AG11D	5-1437537-7
	–	5					818-AG10D	5-1437537-6
	W/RAILS	6	.295/.305	.400	.800	1	816-AR11D	~~5-1437537-4~~
17 OBSOLETE	.180 PC LEAD	5					816-AG45D	~~5-1437537-3~~
	.180 PC LEAD	6					816-AG44D	~~5-1437537-2~~
	HIGH RETENTION	6					816-AG34D	~~5-1437537-1~~
	HIGH RETENTION	5					816-AG33D	~~5-1437537-0~~
OBSOLETE	–	7					816-AG12D	~~4-1437537-6~~
	–	6					816-AG11D	4-1437537-0
	–	5					816-AG10D	3-1437537-7
	.180 PC LEAD, W/RAILS S/B 3-1437537-3	6	.295/.305	.400	.700	1	814-AR44D	5-1437533-2
	W/RAILS	6					814-AR11D	~~3-1437537-5~~
	.180 PC LEAD	5					814-AG45D	~~3-1437537-4~~
17 OBSOLETE	.180 PC LEAD	6					814-AG44D	~~3-1437537-3~~
	.180 PC LEAD	7					814-AG43D	~~3-1437537-2~~
	HIGH RETENTION	6					814-AG34D	~~3-1437537-1~~
	–	7					814-AG12D	~~2-1437537-9~~
	–	6					814-AG11D	2-1437537-4
	–	5					814-AG10D	2-1437537-1
OBSOLETE	~~W/RAILS~~	6	~~.295/.305~~	~~.400~~	~~.400~~	~~3~~	~~808-AR11D~~	~~1-1437537-9~~
	.180 PC LEAD	5					808-AG45D	~~1-1437537-8~~
17 OBSOLETE	.180 PC LEAD	6					808-AG44D	~~1-1437537-7~~
	.180 PC LEAD	7					808-AG43D	~~1-1437537-5~~
	HIGH RETENTION	6					808-AG34D	~~1-1437537-4~~
	–	7					808-AG12D	1-1437537-2
	–	6					808-AG11D	0-1437537-8
	–	5					808-AG10D	0-1437537-5
12	S/B 6-1437529-8	6	.295/.305	.400	.300	–	806-AG11D	2-1437533-5
12	SUPERSEDED BY 6-1437529-5	5					806-AG10D	2-1437533-3
	COMMENTS	PLATING	C	B	A	FIG	AUGAT PART NO.	TE PART NO.

800 SERIES MACHINED PREMIUM CONTACT PART NUMBER TABLE

17 OBSOLETE	HIGH RETENTION	6	.895/.905	1.000	3.200	2	864-AG34D	~~5-1437538-4~~
	–	7					864-AG12D	~~5-1437538-2~~
	–	6					864-AG11D	4-1437538-8
	–	5					864-AG10D	3-1437540-1
OBSOLETE	W/RAILS	6	.595/.605	.700	2.400	2	848-AR11D	~~4-1437538-6~~
17 OBSOLETE	HIGH RETENTION	6					848-AG34D	~~4-1437538-5~~
	–	7					848-AG12D	~~4-1437538-4~~
	–	6					848-AG11D	4-1437538-1
	–	5					848-AG10D	3-1437538-9
17 OBSOLETE	–	7	.595/.605	.700	2.100	2	842-AG12D	~~3-1437538-8~~
OBSOLETE	–	6					842-AG11D	~~3-1437538-7~~
	W/RAILS	6	.595/.605	.700	2.000	2	840-AR11D	~~3-1437538-6~~
17 OBSOLETE	.180 PC LEAD	6					840-AG44D	~~3-1437538-5~~
	.180 PC LEAD	7					840-AG43D	~~3-1437538-4~~
	HIGH RETENTION	6					840-AG34D	~~3-1437538-3~~
	–	7					840-AG12D	3-1437538-2
	–	6					840-AG11D	3-1437538-0
	–	5					840-AG10D	2-1437538-9
	–	6	.595/.605	.700	1.800	2	836-AG11D	2-1437538-7
	S/B 2-1437528-4	7	.595/.605	.700	1.600	2	832-AR12D	9-1437533-7
17 OBSOLETE	HIGH RETENTION	7					832-AG38D	~~9-1437533-4~~
	HIGH RETENTION	6					832-AG34D	~~2-1437538-5~~
	–	7					832-AG12D	2-1437538-4
	–	6					832-AG11D	2-1437538-2
	–	5					832-AG10D	2-1437538-1
17 OBSOLETE	W/RAILS	7					828-AR12D	~~6-1437538-9~~
OBSOLETE	~~W/RAILS~~	6					~~828-AR11D~~	~~1-1437538-6~~
17 OBSOLETE	.180 PC LEAD	6	.595/.605	.700	1.400	1	828-AG44D	~~1-1437538-5~~
	.180 PC LEAD	7					828-AG43D	~~1-1437538-4~~
	HIGH RETENTION	6					828-AG34D	1-1437538-3
	–	7					828-AG12D	1-1437538-0
	–	6					828-AG11D	0-1437538-4
	–	5					828-AG10D	0-1437538-3
	COMMENTS	PLATING	C	B	A	FIG	AUGAT PART NO.	TE PART NO.

THIS DRAWING IS A CONTROLLED DOCUMENT.	DWN R BROWN 06MAY04	Tyco Electronics	Tyco Electronics Corporation Harrisburg, Pa 17105-3608
DIMENSIONS: INCHES	CHK K WRIGHT 06MAY04	NAME	DIP SOCKET, 800 SERIES
TOLERANCES UNLESS OTHERWISE SPECIFIED: 0 PLC ± – 1 PLC ± – 2 PLC ± – 3 PLC ± .005 4 PLC ± – ANGLES ± –	APVD K WRIGHT 06MAY04	SIZE A1	CAGE CODE 00779 DRAWING NO C-1437539-2 RESTRICTED TO –
MATERIAL – FINISH –	PRODUCT SPEC – APPLICATION SPEC – WEIGHT –	CUSTOMER DRAWING	SCALE 1:1 SHEET 2 OF 4 REV A3

THIS DRAWING IS UNPUBLISHED. RELEASED FOR PUBLICATION -.- .
© COPYRIGHT - BY TYCO ELECTRONICS CORPORATION. ALL RIGHTS RESERVED.

LOC	DIST
AD	00

REVISIONS

P	LTR	DESCRIPTION	DATE	DWN	APVD
	–	SEE SHEET 1	–	–	–

800 SERIES STAMPED ECONOMY CONTACT LEAD FREE PART NUMBER TABLE

OBSOLETE	W/RAILS	13	.595/.605	.700	2.400	2	848-AR11D-ES-LF	8-1437540-0
OBSOLETE	W/RAILS	14					840-AR12D-ES-LF	6-6447099-8
OBSOLETE	W/RAILS	15					840-AR11D-ESL-LF	7-1437540-2
OBSOLETE	W/RAILS	13	.595/.605	.700	2.000	2	840-AR11D-ES-LF	7-1437540-1
	.180 PC LEAD	15					840-AG44D-ESL-LF	7-1437540-0
OBSOLETE	W/RAILS	15					832-AR11D-ESL-LF	0-6437540-9
OBSOLETE	W/RAILS	13					832-AR11D-ES-LF	0-6437540-8
	.180 PC LEAD	13	.595/.605	.700	1.600	2	832-AG44D-ES-LF	0-6437540-7
	.180 PC LEAD	14					832-AG43D-ES-LF	0-6437540-6
OBSOLETE	.180 PC LEAD W/RAILS	15					828-AR44D-ESL-LF	9-6437539-8
OBSOLETE	W/RAILS	14	.595/.605	.700	1.400	1	828-AR12D-ES-LF	6-6447099-7
OBSOLETE	W/RAILS	13					828-AR11D-ES-LF	9-6437539-6
	.180 PC LEAD	13					828-AG44D-ES-LF	9-6437539-5
OBSOLETE	.180 PC LEAD W/RAILS	15	.295/.305	.400	1.200	1	824-AR47D-ESL-LF	8-6437533-3
OBSOLETE	W/RAILS	13	.295/.305	.400	1.200	1	824-AR31D-ES-LF	8-6437539-7
OBSOLETE	W/RAILS	14	.595/.605	.700	1.200	1	824-AR12D-ES-LF	6-6447099-6
	.180 PC LEAD	15	.595/.605	.700	1.200	1	824-AG44D-ESL-LF	8-6437539-3
	.180 PC LEAD	13	.295/.305	.400	1.100	1	822-AG44D-ES-LF	6-6437539-5
OBSOLETE	W/RAILS	15	.295/.305	.400	1.000	1	820-AR11D-ESL-LF	5-6437539-8
OBSOLETE	W/RAILS	13					820-AR11D-ES-LF	5-6437539-7
OBSOLETE	W/RAILS	15					816-AR11D-ESL-LF	3-6437539-5
OBSOLETE	W/RAILS	13	.295/.305	.400	.800	1	816-AR11D-ES-LF	3-6437539-4
	.180 PC LEAD	15					816-AG44D-ESL-LF	3-6437539-2
OBSOLETE	W/RAILS	13	.295/.305	.400	.700	1	814-AR11D-ES-LF	2-6437539-2
OBSOLETE	W/RAILS	13					808-AR11D-ES-LF	1-6437539-0
	.180 PC LEAD	14	.295/.305	.400	.400	1	808-AG43D-ES-LF	6437537-6
	COMMENTS	PLATING	C	B	A	FIG	AUGAT PART NO.	TE PART NO.

800 SERIES STAMPED ECONOMY CONTACT PART NUMBER TABLE

17 OBSOLETE	–	7	.895/.905	1.000	3.200	2	864-AG12D-ES	5-1437538-3
	–	9					864-AG11D-ESL	5-1437538-0
	–	6					864-AG11D-ES	4-1437538-9
17 OBSOLETE	–	5					864-AG10D-ES	3-1437540-2
OBSOLETE	W/RAILS	9					848-AR11D-ESL	6-1437540-2
17	W/RAILS	6	.595/.605	.700	2.400	2	848-AR11D-ES	3-1437540-0
OBSOLETE	–	7					848-AG12D-ES	2-1437540-8
	–	9					848-AG11D-ESL	4-1437538-2
	–	6					848-AG11D-ES	2-1437540-6
17 OBSOLETE	–	5					848-AG10D-ES	2-1437540-5
	–	9	.595/.605	.700	2.100	2	842-AG11D-ESL	2-1437540-4
	–	6					842-AG11D-ES	2-1437540-3
	.180 PC LEAD W/RAILS S/B 2-1437540-0	9					840-AR44D-ESL	0-1437534-7
17 OBSOLETE	W/RAILS	7					840-AR12D-ES	6-1447099-8
OBSOLETE	W/RAILS	9					840-AR11D-ESL	2-1437540-2
OBSOLETE	W/RAILS	6					840-AR11D-ES	2-1437540-1
	.180 PC LEAD	9	.595/.605	.700	2.000	2	840-AG44D-ESL	2-1437540-0
	–	7					840-AG12D-ES	1-1437540-9
	–	9					840-AG11D-ESL	1-1437540-7
	–	6					840-AG11D-ES	1-1437540-6
	–	5					840-AG10D-ES	1-1437540-4
17 OBSOLETE	–	7					836-AG12D-ES	1-1437540-2
	–	9	.595/.605	.700	1.800	2	836-AG11D-ESL	1-1437540-1
	–	6					836-AG11D-ES	1-1437540-0
OBSOLETE	W/RAILS	9					832-AR11D-ESL	0-1437540-9
OBSOLETE	W/RAILS	6					832-AR11D-ES	0-1437540-8
	.180 PC LEAD S/B 1437540-1	8					832-AG45D-ESL	6-1437538-0
	.180 PC LEAD S/B 1437540-7	9					832-AG44D-ESL	9-1437533-5
17	.180 PC LEAD	6	.595/.605	.700	1.600	2	832-AG44D-ES	0-1437540-7
OBSOLETE	.180 PC LEAD	7					832-AG43D-ES	0-1437540-6
	–	7					832-AG12D-ES	0-1437540-5
	–	9					832-AG11D-ESL	0-1437540-3
	–	6					832-AG11D-ES	0-1437540-2
	–	5					832-AG10D-ES	0-1437540-1
OBSOLETE	.180 PC LEAD W/RAILS	9					828-AR44D-ESL	9-1437539-8
17 OBSOLETE	W/RAILS	7					828-AR12D-ES	6-1447099-7
OBSOLETE	W/RAILS	9					828-AR11D-ESL	9-1437539-7
OBSOLETE	W/RAILS	6					828-AR11D-ES	9-1437539-6
17 OBSOLETE	.180 PC LEAD	6	.595/.605	.700	1.400	1	828-AG44D-ES	9-1437539-5
	–	7					828-AG12D-ES	9-1437539-4
	–	9					828-AG11D-ESL	9-1437539-2
	–	6					828-AG11D-ES	9-1437539-1
	–	5					828-AG10D-ES	8-1437539-9
	COMMENTS	PLATING	C	B	A	FIG	AUGAT PART NO.	TE PART NO.

800 SERIES STAMPED ECONOMY CONTACT PART NUMBER TABLE

17 OBSOLETE	.180 PC LEAD W/RAILS	9	.295/.305	.400	1.200	1	824-AR47D-ESL	8-1437533-3
SUPERSEDED	.180 PC LEAD W/RAILS S/B 8-1437539-3	9	.595/.605	.700	1.200	1	824-AR44D-ESL	8-1437533-2
17	W/RAILS	9	.295/.305	.400	1.200	1	824-AR31D-ESL	3-1437540-9
OBSOLETE	W/RAILS	6					824-AR31D-ES	8-1437539-7
	W/RAILS	7					824-AR12D-ES	6-1447099-6
OBSOLETE	W/RAILS	9	.595/.605	.700	1.200	1	824-AR11D-ESL	8-1437539-6
OBSOLETE	W/RAILS	6					824-AR11D-ES	8-1437539-5
OBSOLETE	–	9	.395/.405	.500	1.200	1	824-AG66D-ESL	8-1437539-4
	–	5					824-AG65D-ES	0-1571180-1
17 OBSOLETE	.180 PC LEAD	9	.595/.605	.700	1.200	1	824-AG44D-ESL	8-1437539-3
	–	7	.295/.305	.400	1.200	1	824-AG32D-ES	8-1437539-1
	–	9					824-AG31D-ESL	7-1437539-7
	–	6					824-AG31D-ES	7-1437539-6
	–	8					824-AG30D-ESL	7-1437539-4
	–	5					824-AG30D-ES	7-1437539-3
	–	7	.595/.605	.700	1.200	1	824-AG12D-ES	7-1437539-2
	–	9					824-AG11D-ESL	7-1437539-0
	–	6					824-AG11D-ES	6-1437539-9
		5					824-AG10D-ES	6-1437539-7
17 OBSOLETE	.180 PC LEAD	6	.295/.305	.400	1.100	1	822-AG44D-ES	6-1437539-5
	–	7					822-AG12D-ES	6-1437539-4
	–	9					822-AG11D-ESL	6-1437539-3
	–	6					822-AG11D-ES	6-1437539-2
17 OBSOLETE	–	5					822-AG10D-ES	6-1437539-0
SUPERSEDED	.180 PC LEAD W/RAILS S/B 7-1437537-4	9	.295/.305	.400	1.000	1	820-AR44D-ESL	7-1437533-1
17 OBSOLETE	W/RAILS	9					820-AR11D-ESL	5-1437539-8
OBSOLETE	W/RAILS	6					820-AR11D-ES	5-1437539-7
	.180 PC LEAD S/B 7-1437537-4	9					820-AG44D-ES	7-1437533-0
	–	7					820-AG12D-ES	5-1437539-6
	–	9					820-AG11D-ESL	5-1437539-3
	–	6					820-AG11D-ES	5-1437539-2
	W/RAILS	5					820-AG10D-ES	5-1437539-0
	.180 PC LEAD W/RAILS S/B 4-1437539-9	9	.295/.305	.400	.900	1	818-AR44D-ESL	6-1437533-4
OBSOLETE	W/RAILS	9					818-AR11D-ESL	4-1437539-8
OBSOLETE	W/RAILS	6					818-AR11D-ES	4-1437539-7
	.180 PC LEAD S/B 6-1437537-1	9					818-AG44D-ESL	6-1437533-3
17 SUP. BY 1571552-5	–	7					818-AG12D-ES	4-1437539-6
		9					818-AG11D-ESL	4-1437539-4
	–	6					818-AG11D-ES	4-1437539-3
17	–	5					818-AG10D-ES	4-1437539-1
OBSOLETE	W/RAILS	9	.295/.305	.400	.800	1	816-AR11D-ESL	3-1437539-5
OBSOLETE	W/RAILS	6					816-AR11D-ES	3-1437539-4
17	.180 PC LEAD	5					816-AG45D-ES	3-1437539-3
OBSOLETE	.180 PC LEAD	9					816-AG44D-ESL	3-1437539-2
	–	7					816-AG12D-ES	3-1437539-1
	–	9					816-AG11D-ESL	2-1437539-9
	–	6					816-AG11D-ES	2-1437539-8
	–	5					816-AG10D-ES	2-1437539-6
	.180 PC LEAD, W/RAILS S/B 3-1437537-3	9	.295/.305	.400	.700	1	814-AR44D-ESL	5-1437533-3
OBSOLETE	W/RAILS	9					814-AR11D-ESL	2-1437539-3
	W/RAILS	6					814-AR11D-ES	2-1437539-2
17 OBSOLETE	.180 PC LEAD	5					814-AG45D-ES	2-1437539-1
SUPERSEDED	.180 PC LEAD S/B 3-1437537-3	9					814-AG44D-ES	4-1437540-5
	–	7					814-AG12D-ES	2-1437539-0
	–	9					814-AG11D-ESL	1-1437539-7
	–	6					814-AG11D-ES	1-1437539-6
	–	5					814-AG10D-ES	1-1437539-4
	.180 PC W/RAILS, S/B 1437539-9	9	.295/.305	.400	.400	1	808-AR44D-ESL	3-1437533-1
OBSOLETE	W/RAILS	9					808-AR11D-ESL	1-1437539-1
	W/RAILS	6					808-AR11D-ES	1-1437539-0
17	.180 PC LEAD	9					808-AG44D-ESL	0-1437539-9
OBSOLETE	.180 PC LEAD	7					808-AG43D-ES	1-1437537-6
	–	7					808-AG12D-ES	0-1437539-8
	–	9					808-AG11D-ESL	0-1437539-6
	–	6					808-AG11D-ES	0-1437539-5
	–	5					808-AG10D-ES	0-1437539-2
	S/B 7-1437529-1	7	.295/.305	.400	.300	1	806-AG12D-ES	2-1437533-8
	S/B 1437535-8	9					806-AG11D-ESL	8-1437536-5
	S/B 1437535-7	6					806-AG11D-ES	2-1437533-7
	COMMENTS	PLATING	C	B	A	FIG	AUGAT PART NO.	TE PART NO.

THIS DRAWING IS A CONTROLLED DOCUMENT.

DIMENSIONS: INCHES

TOLERANCES UNLESS OTHERWISE SPECIFIED:
0 PLC ± –
1 PLC ± –
2 PLC ± –
3 PLC ± .005
4 PLC ± –
ANGLES ± –

MATERIAL –
FINISH –

DWN	R BROWN	06MAY04
CHK	K WRIGHT	06MAY04
APVD	K WRIGHT	06MAY04
PRODUCT SPEC	–	
APPLICATION SPEC	–	
WEIGHT	–	

Tyco Electronics
Tyco Electronics Corporation
Harrisburg, Pa 17105-3608

NAME: DIP SOCKET, 800 SERIES

SIZE	CAGE CODE	DRAWING NO	RESTRICTED TO
A1	00779	C-1437539-2	–

CUSTOMER DRAWING | SCALE 1:1 | SHEET 3 OF 4 | REV A3

THIS DRAWING IS UNPUBLISHED. RELEASED FOR PUBLICATION -,- .
© COPYRIGHT - BY TYCO ELECTRONICS CORPORATION. ALL RIGHTS RESERVED.

LOC	DIST
AD	00

REVISIONS

P	LTR	DESCRIPTION	DATE	DWN	APVD
	—	SEE SHEET 1	–	—	—

1000 SERIES MACHINED PREMIUM CONTACT, LOW INSERTION FORCE PART NUMBER TABLE

COMMENTS	PLATING	C	B	A	FIG	AUGAT PART NO.	TE PART NO.
S/B 4-1437538-8	6	.895/.905	1.000	3.200	2	1064-AG11D	2-1437529-4
S/B 3-1437540-1	5	.895/.905	1.000	3.200	2	1064-AG10D	2-1437529-3
S/B 3-1437538-0	6	.595/.605	.700	2.000	2	1040-AG11D	2-1437529-2
S/B 2-1437538-2	6	.595/.605	.700	1.600	2	1032-AG11D	2-1437529-1
S/B 1437538-4	6	.595/.605	.700	1.400	1	1028-AG11D	1-1437529-9
S/B 8-1437537-9	6	.295/.305	.400	1.200	1	1024-AG31D	1-1437529-8
S/B 8-1437537-2	6	.595/.605	.700	1.200	1	1024-AG11D	1-1437529-6
S/B 8-1437537-1	5	.595/.605	.700	1.200	1	1024-AG10D	1-1437529-5
S/B 6-1437537-6	6	.295/.305	.400	1.000	1	1020-AG11D	1-1437529-4
S/B 6-1437537-4	5					1020-AG10D	1-1437529-3
S/B 5-1437537-7	6	.295/.305	.400	.900	1	1018-AG11D	1-1437529-2
S/B 5-1437537-6	5					1018-AG10D	1-1437529-1
S/B 4-1437537-0	6	.295/.305	.400	.800	1	1016-AG11D	1-1437529-0
S/B 3-1437537-7	5					1016-AG10D	0-1437529-9
S/B 2-1437537-4	6	.295/.305	.400	.700	1	1014-AG11D	0-1437529-7
S/B 2-1437537-1	5					1014-AG10D	0-1437529-6
S/B 1437537-8	6	.295/.305	.400	.400	3	1008-AG11D	0-1437529-5
S/B 1437537-5	5					1008-AG10D	0-1437529-4

1800 SERIES MACHINED PREMIUM CONTACT, LOW GOLD PART NUMBER TABLE

	COMMENTS	PLATING	C	B	A	FIG	AUGAT PART NO.	TE PART NO.
	S/B 5-1437538-0	10	.895/.905	1.000	3.200	2	1864-AG111D	5-1437529-1
	S/B 6-1437540-2 W/RAILS	10	.595/.605	.700	2.400	2	1848-AR111D	5-1437529-0
	S/B 4-1437538-2	10					1848-AG111D	4-1437529-9
	S/B 2-1437540-4	10	.595/.605	.700	2.100	2	1842-AG111D	4-1437529-8
	S/B 2-1437540-2 W/RAILS	10	.595/.605	.700	2.000	2	1840-AR111D	4-1437529-7
	S/B 1-1437540-7	10					1840-AG111D	4-1437529-6
	S/B 1437540-3	10	.595/.605	.700	1.600	2	1832-AG111D	4-1437529-5
	S/B 9-1437539-7 W/RAILS	10	.595/.605	.700	1.400	1	1828-AR111D	4-1437529-4
	S/B 9-1437539-2	10					1828-AG111D	4-1437529-3
	S/B 3-1437540-9 W/RAILS	10	.295/.305	.400	1.200	1	1824-AR131D	4-1437529-2
OBSOLETE	~~S/B 8-1437539-6 W/RAILS~~	10	.595/.605	.700	1.200	1	1824-AR111D	~~4-1437529-1~~
OBSOLETE	~~S/B 8-1437539-4~~	10	.395/.405	.500	1.200	1	1824-AG141D	~~4-1437529-0~~
	S/B 7-1437539-7	10	.295/.305	.400	1.200	1	1824-AG131D	3-1437529-9
	S/B 7-1437539-0	10	.595/.605	.700	1.200	1	1824-AG111D	3-1437529-8
	S/B 6-1437539-3	10	.395/.405	.500	1.100	1	1822-AG111D	3-1437529-7
	S/B 5-1437539-8 W/RAILS	10	.295/.305	.400	1.000	1	1820-AR111D	3-1437529-6
SUPERSEDED	S/B 5-1437539-3	10					1820-AG111D	~~0-1437537-3~~
	S/B 4-1437539-8 W/RAILS	10	.295/.305	.400	.900	1	1818-AR11D	3-1437529-5
	S/B 4-1437539-4	10					1818-AG111D	3-1437529-3
OBSOLETE	S/B 3-1437539-5 W/RAILS	10	.295/.305	.400	.800	1	1816-AR111D	~~3-1437529-2~~
	S/B 2-1437539-9	10					1816-AG111D	3-1437529-1
	S/B 2-1437539-3 W/RAILS	10	.295/.305	.400	.700	1	1814-AR111D	3-1437529-0
	S/B 1-1437539-7	10					1814-AG111D	2-1437529-9
	S/B 1-1437539-1 W/RAILS	10	.295/.305	.400	.400	3	1808-AR111D	2-1437529-6
	S/B 1437539-6	10					1808-AG111D	2-1437529-5
OBSOLETE	~~S/B 1437535-8~~	10	.295/.305	.400	.300		1806-AG111D	~~0-1437535-2~~

THIS DRAWING IS A CONTROLLED DOCUMENT.

DIMENSIONS: INCHES

TOLERANCES UNLESS OTHERWISE SPECIFIED:
0 PLC ± –
1 PLC ± –
2 PLC ± –
3 PLC ± .005
4 PLC ± –
ANGLES ± –

MATERIAL –
FINISH –

DWN	R BROWN	06MAY04
CHK	K WRIGHT	06MAY04
APVD	K WRIGHT	06MAY04
PRODUCT SPEC	—	
APPLICATION SPEC	—	
WEIGHT	–	

Tyco Electronics Corporation
Harrisburg, Pa 17105-3608

NAME: DIP SOCKET, 800 SERIES

SIZE	CAGE CODE	DRAWING NO	RESTRICTED TO
A1	00779	C-1437539-2	—

CUSTOMER DRAWING | SCALE 1:1 | SHEET 4 OF 4 | REV A3