THIS DRAWING IS UNPUBLISHED. RELEASED FOR PUBLICATION 20
© COPYRIGHT 20 BY - ALL RIGHTS RESERVED.

LOC	DIST
AD	00

REVISIONS

P	LTR	DESCRIPTION	DATE	DWN	APVD
	A6	REVISED PER ECO-12-001132	24APR2012	KH	AS

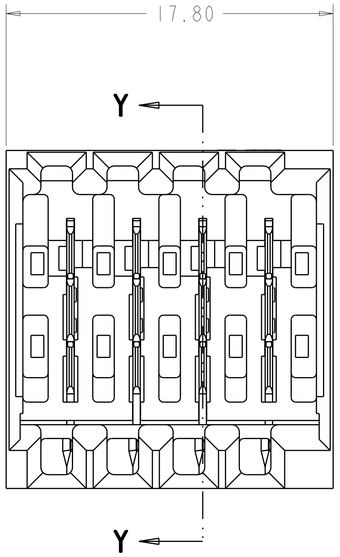

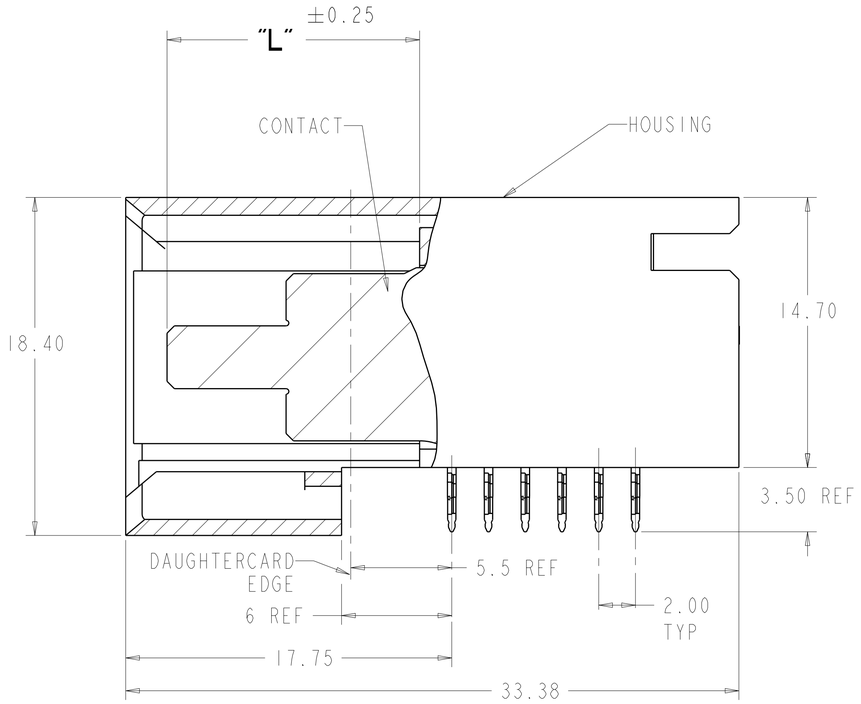

SECTION Y-Y

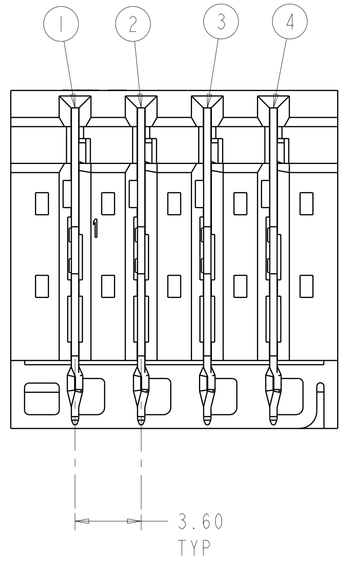

1. DIMENSIONS PER CUSTOMER BOARD LAYOUT

2. FINISH: 1.27µM MIN GOLD IN CONTACT AREA, 1.27µM MIN TIN-LEAD ON PCB TAIL, OVER 1.27µM MIN NICKEL OVER ALL.

3. FINISH: 1.27µM MIN GOLD IN CONTACT AREA, 1.27µM MIN TIN ON PCB TAIL, OVER 1.27µM MIN NICKEL OVER ALL.

4. HOUSING: LCP, UL94V-0, BLACK
CONTACT: PHOSPHOR BRONZE

6. OBSOLETE PART NUMBER.

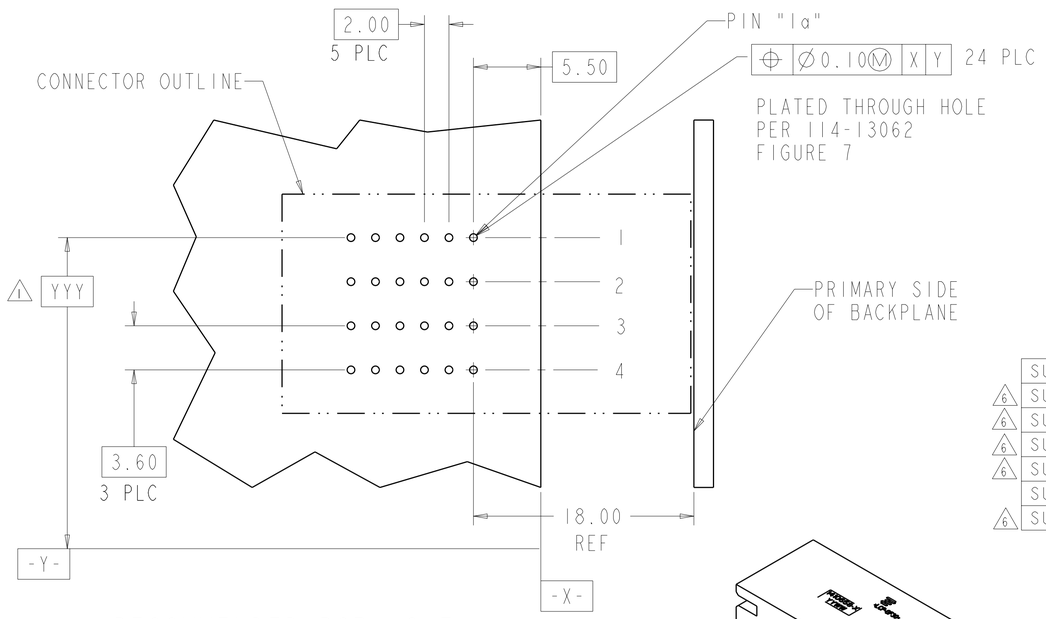

RECOMMENDED PCB HOLE
LAYOUT
DAUGHTER CARD
PRIMARY SIDE
SCALE 4:1

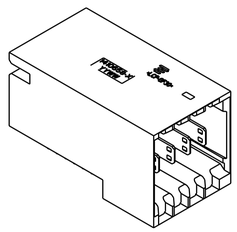

SCALE 2:1

2	13.75	13.75	12.25	12.25	2-1410271-2
3	13.75	13.75	12.25	12.25	2-1410271-1
	12.25	10.75	10.75	12.25	2-1410271-0
	10.75	12.25	13.75	10.75	1-1410271-9
	10.75	10.75	10.75	10.75	1-1410271-8
	10.75	12.25	12.25	10.75	1-1410271-7
	12.25	12.25	12.25	12.25	1-1410271-6
	10.75	12.25	13.75	12.25	1-1410271-5
	10.75	13.75	13.75	10.75	1-1410271-4
	10.75	13.75	13.75	12.25	1-1410271-3
	12.25	13.75	13.75	12.25	1-1410271-2
	13.75	13.75	13.75	13.75	1-1410271-1
2	12.25	10.75	10.75	12.25	1-1410271-0
	10.75	12.25	13.75	10.75	6 1410271-9
	10.75	10.75	10.75	10.75	1410271-8
	10.75	12.25	12.25	10.75	1410271-7
	12.25	12.25	12.25	12.25	1410271-6
	10.75	12.25	13.75	12.25	~~1410271-5~~
	10.75	13.75	13.75	10.75	6 ~~1410271-4~~
	10.75	13.75	13.75	12.25	~~1410271-3~~
	12.25	13.75	13.75	12.25	1410271-2
	13.75	13.75	13.75	13.75	1410271-1
PLATING	CAVITY #4 "L"	CAVITY #3 "L"	CAVITY #2 "L"	CAVITY #1 "L"	PART NUMBER

	SUPERCEDED BY 1-1410271-9
6	SUPERCEDED BY 1-1410271-8
6	SUPERCEDED BY 1-1410271-7
6	SUPERCEDED BY 1-1410271-6
6	SUPERCEDED BY 1-1410271-5
	SUPERCEDED BY 1-1410271-4
6	SUPERCEDED BY 1-1410271-3

THIS DRAWING IS A CONTROLLED DOCUMENT.

DIMENSIONS: mm

TOLERANCES UNLESS OTHERWISE SPECIFIED:
0 PLC ±-
1 PLC ±0.3
2 PLC ±0.25
3 PLC ±-
4 PLC ±-
ANGLES ±1°

MATERIAL 3
FINISH 2

DWN L.A.MAYER 10SEP2000
CHK S.WELLER 10SEP2000
APVD S.FLICKINGER 10SEP2000
PRODUCT SPEC 108-2062
APPLICATION SPEC 114-13062
WEIGHT -

TE Connectivity

NAME ASSEMBLY, POWER, RIGHT ANGLE HEADER, 4 CAVITY, 20.3mm, MULTIGIG

SIZE	CAGE CODE	DRAWING NO	RESTRICTED TO
A1	00779	C-1410271	-

CUSTOMER DRAWING | SCALE 6:1 | SHEET 1 OF 1 | REV A6