Power Relay RM 2/3/7

- **2/3 pole 10/16A, 2 form C (CO) or 3 form C (CO) contacts**
- **Switching capacity up to 6000VA**
- **DC or AC coil**
- **Mechanical indicator**
- **Push-to-test button**
- **Plug-in version, PCB terminals, chassis- or DIN-rail mount**

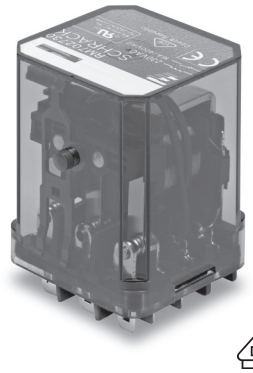

F0163-B

Typical applications
Elevator control, power supplies

Approvals

VDE REG.-Nr. 40003144, UL E214025
Technical data of approved types on request

Contact Data

Contact Data	RM2	RM3	RM7
Contact arrangement	2 form C 2 CO	3 form C 3 CO	3 form C 3 CO
Rated voltage		400VAC	
Max. switching voltage		440VAC	
Rated current	16A	10A	16A
Limiting making current, max. 20ms	40A	40A	40A
Switching power	6000VA	3800VA	6000VA
Contact material	ACdO, AgNi90/10	AgCdO, in preparation	AgCdO
Min. recommended contact load		24VDC/100mA	
Frequency of operation, with/without load		960/6000h^{-1}	
Operate/release time max., DC coil		15/10ms	
Bounce time max., DC coil, form A/form B		4/10ms	

Contact ratings

Type	Contact	Load	Cycles
IEC 61810			
RM20	C (CO)	16A, 400VAC, cosφ=1, 35°C	100x10^3
RM22	C (CO)	16A, 400VAC, cosφ=1, DC-coil, 70°C	100x10^3
RM22	C (CO)	16A, 400VAC, cosφ=1, AC-coil, 60°C	50x10^3
RM30	C (CO)	10A, 400VAC, cosφ=1, 35°C	100x10^3
RM70	C (CO)	16A, 400VAC, cosφ=1, 35°C	100x10^3
UL 508			
RM2	A (NO)	16A, 277VAC, general purpose, 50°C	30x10^3
RM2	A (NO)	16A, 415VAC, resistive, 50°C	100x10^3
RM20	A (NO)	10A, 48VDC, 50°C	30x10^3
RM3	C (CO)	10A, 415VAC, resistive, 50°C	100x10^3
RM30	A (NO)/B (NC)	10A, 277VAC, general purpose, 50°C	30x10^3
RM7	A (NO)	16A, 415VAC, resistive, 50°C	100x10^3
RM7	A (NO)/B (NC)	16A, 277VAC, general purpose, 50°C	30x10^3

Mechanical endurance
DC coil 20x10^6 operations
AC coil 20x10^6 operations

Max. DC load breaking capacity

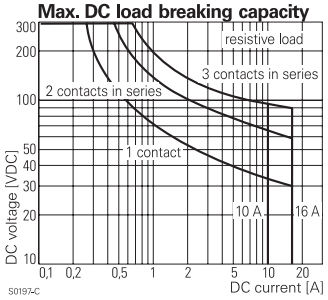

Electrical endurance

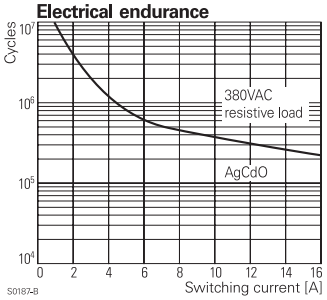

Coil Data

Coil Data	
Coil voltage range	6 to 220VDC 6 to 400VAC
Operative range, IEC 61810	2
Coil insulation system according UL	class 130 (B)

Coil versions, DC coil

STD	LED bipolar	Coil code PD[3]	LED+ PD[3]	Rated voltage VDC	Coil resistance Ω±10%[1)2)]	Rated coil power W
Coil versions, DC coil, RM2, RM3						
006	L06	0A6	LA6	6	32	1.1
012	L12	0B2	LB2	12	110	1.3
024	L24	0C4	LC4	24	475	1.2
048	L48	0E8	LE8	48	2000	1.2
060	L60	0G0	LG0	60	2850	1.3
110	M10	1B0	MB0	110	10000[1)]	1.2
221	N21	2C1	NC1	220	40000[2)]	1.2
Coil versions, DC coil, RM7						
006	L06	0A6	LA6	6	24	1.5
012	L12	0B2	LB2	12	86	1.7
024	L24	0C4	LC4	24	345	1.7
048	L48	0E8	LE8	48	1340	1.7
060	L60	0G0	LG0	60	2200	1.6
110	M10	1B0	MB0	110	7300	1.7
221	N21	2C1	NC1	220	30000[2)]	1.6
Operate voltage, DC coil				75% of rated coil voltage		
Release voltage, DC coil				10% of rated coil voltage		

1) Coil resistance ±12%, 2) Coil resistance ±15%
3) Protection diode PD; standard polarity: +A1 / -A2
All figures are given for coil without pre-energization, at ambient temperature +23°C

Coil operating range DC

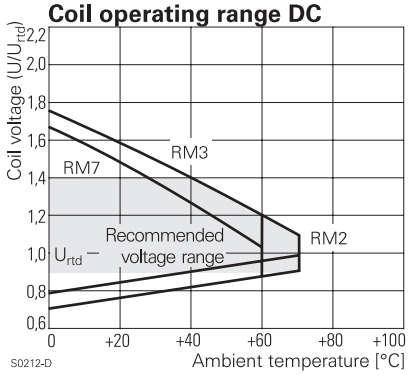

10-2012, Rev. 1012
www.te.com
© 2012 Tyco Electronics Corporation,
a TE Connectivity Ltd. company

Datasheets and product specification according to IEC 61810-1 and to be used only together with the 'Definitions' section.

Datasheets and product data is subject to the terms of the disclaimer and all chapters of the 'Definitions' section, available at http://relays.te.com/definitions

Datasheets, product data, 'Definitions' section, application notes and all specifications are subject to change.

Power Relay RM 2/3/7 (Continued)

Coil Data (continued)

Coil versions, AC coil

Coil code STD	Coil code LED	Rated voltage VAC	Operate voltage 50/60Hz VAC	Release voltage 50/60Hz VAC	Coil resistance Ω±10%[1)2)]	Rated coil power 50/60Hz VA
Coil versions, AC-coil, RM2, RM3						
506	R06	6	4.8/5.1	1.8	5.3	2.29/1.98
512	R12	12	9.6/10.2	3.6	24	2.19/1.86
524	R24	24	19.2/20.4	7.2	86	2.26/ 1.95
548	R48	48	38.4/40.8	14.4	345	2.28/1.97
560	R60	60	48.0/51.0	18.0	544	2.27/1.96
615	S15	115	92.0/97.8	34.5	2000	2.37/2.00
730	T30	230	184.0/195.5	69.0	8300[1)]	2.32/ 1.96
900	V00	400	320.0/340.0	120.0	27500[2)]	2.31/1.96
Coil versions, AC-coil, RM7						
506	R06	6	4.8/5.1	1.8	4.7	2.86/2.36
512	R12	12	9.6/10.2	3.6	19.5	2.71/2.27
524	R24	24	19.2/20.4	7.2	80	2.62/2.00
548	R48	48	38.4/40.8	14.4	320	2.60/2.17
560	R60	60	48.0/51.0	18.0	500	2.62/2.20
615	S15	115	92.0/97.8	34.5	1850	2.65/2.22
730	T30	230	184.0/195.5	69.0	7500	2.69/ 2.26
900	V00	400	320.0/340.0	120.0	23500[2)]	2.61/2.20

[1)] Coil resistance ±12%, [2)] Coil resistance ±15%

All figures are given for coil without pre-energization, at ambient temperature +23°C

Coil operating range AC

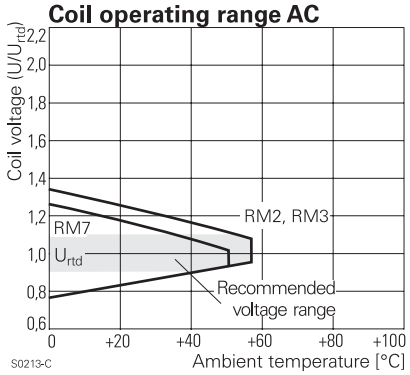

Insulation Data	RM2	RM3	RM7
Initial dielectric strength			
between open contacts	1500Vrms	1500Vrms	1500Vrms
between contact and coil	2500Vrms	2500Vrms	2500Vrms
between adjacent contacts	2500Vrms	2500Vrms	2500Vrms
Initial surge withstand voltage			
between contact and coil	5000V	4000V	4000V
Clearance/creepage			
between contact and coil		≥4.0/14.9mm	
between adjacent contacts		≥6.1/7.3mm	
Material group of insulation parts		IIIa	

Other Data	RM2	RM3	RM7
Material compliance: EU RoHS/ELV, China RoHS, REACH, Halogen content refer to the Product Compliance Support Center at www.te.com/customersupport/rohssupportcenter			
Ambient temperature			
DC coil	-45 to 70°C	-45 to 60°C	-45 to 60°C
AC coil	-45 to 60°C	-45 to 55°C	-45 to 50°C
Cold storage, IEC 60068-2-1		16h/-40°C	
Dry heat, IEC 60068-2-2		16h/+85°C	
Damp heat cyclic, IEC 60068-2-30, Db, Variant 1		12/12h +25/+55°C	
Category of environmental protection			
IEC 61810		RTI - dust protected	
Vibration resistance (functional)			
form A (NO)/form B (NC)	5/2g	5/2g	12/4g
Terminal type		PCB-THT, plug-in, quick-connect	
Cover retention, pull/push force		100/100N	
Weight		81g	
Resistance to soldering heat THT			
IEC 60068-2-20		270°C/10s	
Packaging unit		10/25 pcs.	

Accessories

For details see datasheet: Accessories Power Relay RM

Note: indicated contact ratings and electrical endurance data for direct wiring of relays (according IEC 61810-1); for relays mounted on sockets deratings may apply.

PCB layout / terminal assignment

Bottom view on pins

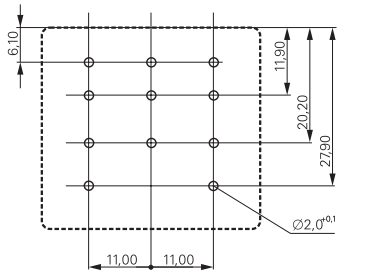

3 form C (CO) contacts

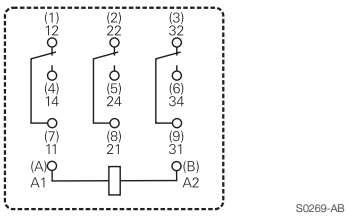

2 form C (CO) contacts

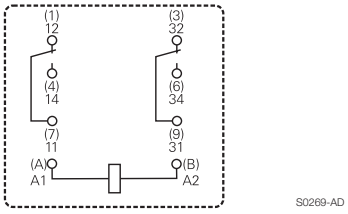

10-2012, Rev. 1012
www.te.com
© 2012 Tyco Electronics Corporation,
a TE Connectivity Ltd. company

Datasheets and product specification according to IEC 61810-1 and to be used only together with the 'Definitions' section.

Datasheets and product data is subject to the terms of the disclaimer and all chapters of the 'Definitions' section, available at http://relays.te.com/definitions

Datasheets, product data, 'Definitions' section, application notes and all specifications are subject to change.

Power Relay RM 2/3/7 (Continued)

Dimensions

Plain cover, plug-in version

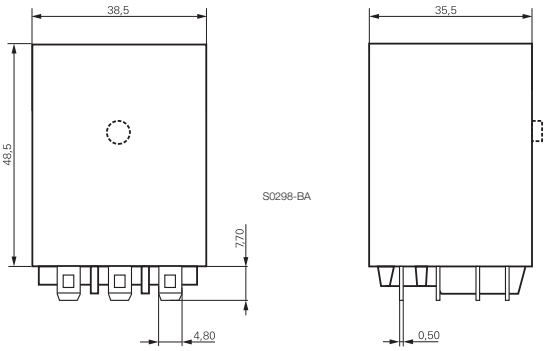

PCB version

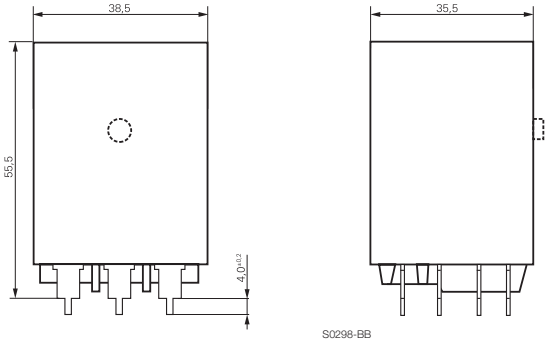

Cover with mounting brackets, 6.3mm quick connect (4.8mm available)

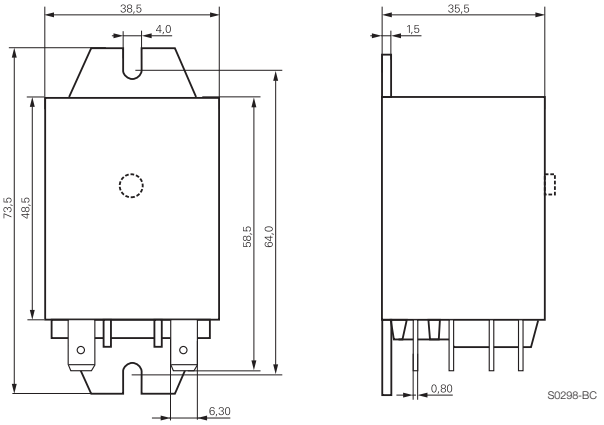

Cover with DIN-snap-on attachement (6.3mm quick connect only)

horizontal

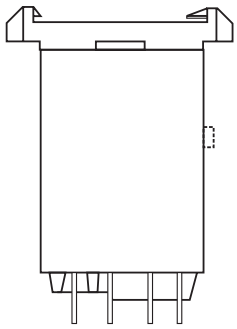

vertical

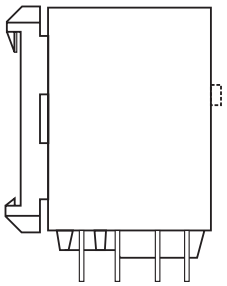

Product code structure

Typical product code	RM	7	0	2	730

Type
- **RM** Power Relay RM 2/3/7

Contact arrangement
- **2** 2 form C contacts (2 CO contacts), 16A
- **3** 3 form C contacts (3 CO contacts), 10A
- **7** 3 form C contacts (3 CO contacts), 16A

Version
- **0** AgCdO, without test button
- **2** AgNi 90/10, without test button
- **3** AgCdO, with test button
- **7** AgNi 90/10, with test button

Enclosure
- **2** Plain cover, 4.8mm quick connect terminals
- **3** Cover with mounting brackets, 4.8mm quick connect terminals
- **5** Cover with mounting brackets, 6.3mm quick connect terminals
- **7** PCB version
- **8** Cover with DIN-snap-on attachment, horizontal, 6.3mm quick connect terminals
- **9** Cover with DIN-snap-on attachment, vertical, 6.3mm quick connect terminals

Coil

Coil code: please refer to coil versions table

10-2012, Rev. 1012
www.te.com
© 2012 Tyco Electronics Corporation,
a TE Connectivity Ltd. company

Datasheets and product specification according to IEC 61810-1 and to be used only together with the 'Definitions' section.

Datasheets and product data is subject to the terms of the disclaimer and all chapters of the 'Definitions' section, available at http://relays.te.com/definitions

Datasheets, product data, 'Definitions' section, application notes and all specifications are subject to change.

Power Relay RM 2/3/7 (Continued)

Product code	Contacts	Version	Enclosure	Coil	Coil	Part number
RM202024	2 form C	Without	Plain cover	DC coil	24VDC	8-1393149-2
RM202524	2 CO contacts	test button	quick c. 4.8mm	AC coil	24VAC	1-1393146-9
RM202615	16 A				115VAC	2-1393146-0
RM202730					230VAC	1-1393148-4
RM203024			Mounting brackets	DC coil	24VDC	1-1393148-6
RM203524			quick c. 4.8mm	AC coil	24VAC	2-1393146-5
RM203615					115VAC	2-1393146-6
RM203730					230VAC	2-1393146-8
RM205024			Mounting brackets	DC coil	24VDC	2-1393146-9
RM205524			quick c. 6.3mm	AC coil	24VAC	3-1393146-0
RM205615					115VAC	3-1393146-1
RM205730					230VAC	3-1393146-2
RM207024			PCB version	DC coil	24VDC	3-1393146-3
RM207615				AC coil	115VAC	8-1393149-5
RM207730					230VAC	3-1393146-4
RM208024			DIN-snap-on	DC coil	24VDC	3-1393146-5
RM208730			horizontal	AC coil	230VAC	8-1393149-6
RM209730			DIN vertical		230VAC	3-1393146-6
RM232024		With	Plain cover	DC coil	24VDC	3-1393146-8
RM232524		test button	quick c. 4.8mm	AC coil	24VAC	3-1393146-9
RM232615					115VAC	4-1393146-0
RM232730					230VAC	3-1393107-4
RM233024			Mounting brackets	DC coil	24VDC	3-1393107-5
RM233615			quick c. 4.8mm	AC coil	115VAC	4-1393146-2
RM235024			Mounting brackets	DC coil	24VDC	8-1393149-8
RM235730			quick c. 6.3mm	AC coil	230VAC	4-1393146-5
RM239730			DIN vertical		230VAC	4-1393148-7
RM302024	3 form C	Without	Plain cover	DC coil	24VDC	8-1393149-9
RM302524	3 CO contacts	test button	quick c. 4.8mm	AC coil	24VAC	5-1393146-3
RM302615	10 A				115VAC	5-1393146-4
RM302730					230VAC	5-1419150-3
RM303024			Mounting brackets	DC coil	24VDC	6-1393148-4
RM303615			quick c. 4.8mm	AC coil	115VAC	5-1393146-5
RM303730					230VAC	5-1393146-7
RM307024			PCB version	DC coil	24VDC	7-1393148-2
RM307730				AC coil	230VAC	5-1393146-9
RM332024		With	Plain cover	DC coil	24VDC	9-1393149-2
RM332524		test button	quick c. 4.8mm	AC coil	24VAC	9-1393149-3
RM332730					230VAC	9-1393149-4
RM333024			Mount. br. QC4.8	DC coil	24VDC	9-1393149-6
RM335730			Mount. br. QC6.3	AC coil	230VAC	6-1393107-1
RM338730			DIN horizontal		230VAC	7-1393148-7
RM339730			DIN vertical		230VAC	6-1393107-2
RM702024	3 form C	Without	Plain cover	DC coil	24VDC	8-1393146-5
RM702524	3 CO contacts	test button	quick c. 4.8mm	AC coil	24VAC	1393844-9
RM702615	16 A				115VAC	1-1393844-0
RM702730					230VAC	1-1393844-1
RM703024			Mounting brackets	DC coil	24VDC	1-1393844-2
RM703524			quick c. 4.8mm	AC coil	24VAC	9-1393146-1
RM703615					115VAC	9-1393146-2
RM703730					230VAC	9-1393146-4
RM705024			Mounting brackets	DC coil	24VDC	9-1393146-6
RM705524			quick c. 6.3mm	AC coil	24VAC	9-1393146-7
RM705615					115VAC	1-1393844-4
RM705730					230VAC	1-1393844-5
RM707024			PCB version	DC coil	24VDC	9-1393146-8
RM707524				AC coil	24VAC	1393147-1
RM707730					230VAC	1393147-2
RM708024			DIN horizontal	DC coil	24VDC	1393147-4
RM708730			quick c. 6.3mm	AC coil	230VAC	1-1419136-0
RM709024			DIN vertical	DC coil	24VDC	2-1393149-2
RM709730				AC coil	230VAC	1393147-5
RM732024		With	Plain cover	DC coil	24VDC	1-1393844-7
RM732524		test button	quick c. 4.8mm	AC coil	24VAC	1-1393147-0
RM732615					115VAC	1-1393147-1
RM732730					230VAC	1-1393844-8
RM733730			Mount.br. QC 4.8		230VAC	1-1393147-5
RM735024			Mounting brackets	DC coil	24VDC	3-1393149-6
RM735524			quick c. 6.3mm	AC coil	24VAC	3-1393149-7
RM735730					230VAC	4-1393149-1
RM737730			PCB version		230VAC	2-1393147-0
RM738024			DIN-snap-on	DC coil	24VDC	2-1393844-0
RM738730			horizontal	AC coil	230VAC	2-1393147-2
RM739024			DIN-snap-on	DC coil	24VDC	4-1393149-5
RM739730			vertical	AC coil	230VAC	2-1393844-2

10-2012, Rev. 1012
www.te.com
© 2012 Tyco Electronics Corporation,
a TE Connectivity Ltd. company

Datasheets and product specification according to IEC 61810-1 and to be used only together with the 'Definitions' section.

Datasheets and product data is subject to the terms of the disclaimer and all chapters of the 'Definitions' section, available at http://relays.te.com/definitions

Datasheets, product data, 'Definitions' section, application notes and all specifications are subject to change.