THIS DRAWING IS UNPUBLISHED. RELEASED FOR PUBLICATION -,- .
© COPYRIGHT - By - ALL RIGHTS RESERVED.

LOC	DIST
AD	00

REVISIONS

P	LTR	DESCRIPTION	DATE	DWN	APVD
	L2	REVISED PER ECO-11-004587	11MAR11	RK	HMR

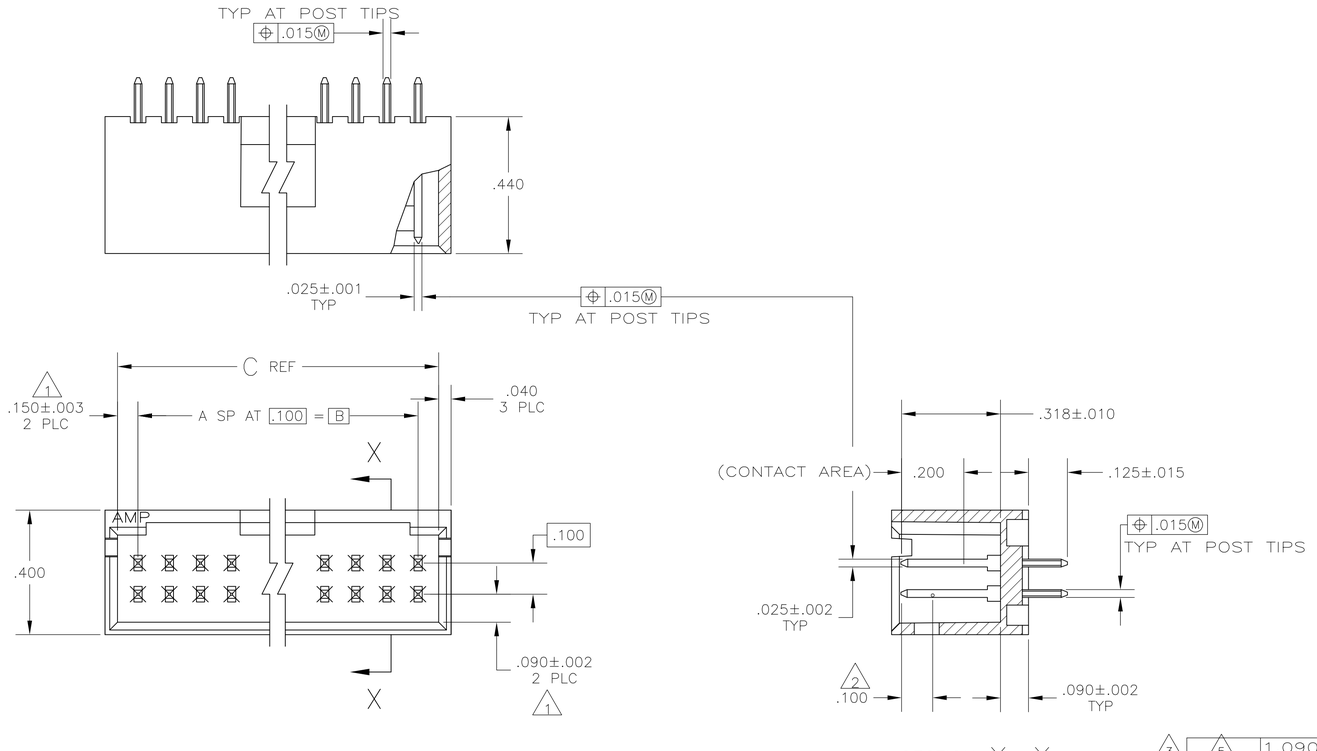

1. THE NOTED DIMENSIONS APPLY AT THE INTERSECTION OF THE POST AND HOUSING
2. POINT OF MEASUREMENT FOR PLATING THICKNESS
3. INDICATED PARTS ARE PACKED IN "GANG-OF -TUBES"
4. POSTS; .000030 GOLD IN CONTACT AREA, .000100-.000200 MATTE TIN-LEAD ON SOLDER TAIL, ALL OVER .000050 NICKEL.
5. POSTS; .000030 GOLD IN CONTACT AREA, .000100-.000200 MATTE TIN ON SOLDER TAIL, ALL OVER .000050 NICKEL.
6. OBSOLETE PARTS: OBSOLETE CIS STREAMLINING PER D.RENAUD/D.SINISI

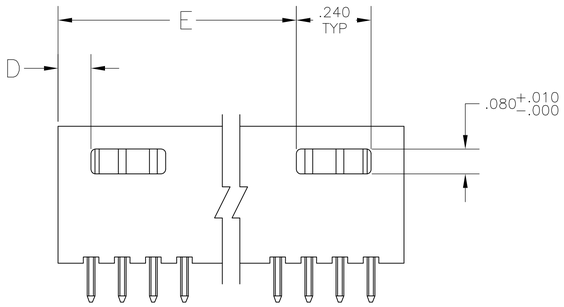

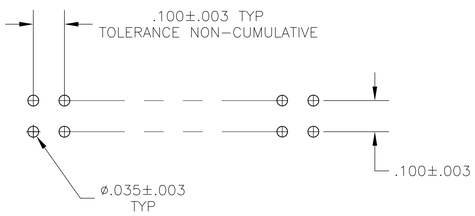

RECOMMENDED HOLE LAYOUT

3									3 OBSOLETE								
	5	1.090	.190	1.400	1.100	11	24	6 8-103169-5		4	1.090	.190	1.400	1.100	11	24	3-103169-5
	5	3.490	.190	3.800	3.500	35	72	6 8-103169-4		4	3.490	.190	3.800	3.500	35	72	6 3-103169-4
	5	3.390	.190	3.700	3.400	34	70	6 8-103169-3		4	3.390	.190	3.700	3.400	34	70	6 3-103169-3
	5	3.290	.190	3.600	3.300	33	68	6 8-103169-2		4	3.290	.190	3.600	3.300	33	68	6 3-103169-2
	5	3.190	.190	3.500	3.200	32	66	6 8-103169-1		4	3.190	.190	3.500	3.200	32	66	6 3-103169-1
	5	3.090	.190	3.400	3.100	31	64	6 8-103169-0		4	3.090	.190	3.400	3.100	31	64	6 3-103169-0
	5	2.990	.190	3.300	3.000	30	62	6 7-103169-9		4	2.990	.190	3.300	3.000	30	62	6 2-103169-9
	5	2.890	.190	3.200	2.900	29	60	7-103169-8		4	2.890	.190	3.200	2.900	29	60	2-103169-8
	5	2.790	.190	3.100	2.800	28	58	6 7-103169-7		4	2.790	.190	3.100	2.800	28	58	6 2-103169-7
	5	2.690	.190	3.000	2.700	27	56	6 7-103169-6		4	2.690	.190	3.000	2.700	27	56	6 2-103169-6
	5	2.590	.190	2.900	2.600	26	54	6 7-103169-5		4	2.590	.190	2.900	2.600	26	54	6 2-103169-5
	5	2.490	.190	2.800	2.500	25	52	6 7-103169-4		4	2.490	.190	2.800	2.500	25	52	6 2-103169-4
	5	2.390	.190	2.700	2.400	24	50	7-103169-3		4	2.390	.190	2.700	2.400	24	50	2-103169-3
	5	2.290	.190	2.600	2.300	23	48	6 7-103169-2		4	2.290	.190	2.600	2.300	23	48	6 2-103169-2
	5	2.190	.190	2.500	2.200	22	46	6 7-103169-1		4	2.190	.190	2.500	2.200	22	46	6 2-103169-1
	5	2.090	.190	2.400	2.100	21	44	6 7-103169-0		4	2.090	.190	2.400	2.100	21	44	6 2-103169-0
	5	1.990	.190	2.300	2.000	20	42	6 6-103169-9		4	1.990	.190	2.300	2.000	20	42	6 1-103169-9
	5	1.890	.190	2.200	1.900	19	40	6-103169-8		4	1.890	.190	2.200	1.900	19	40	1-103169-8
	5	1.790	.190	2.100	1.800	18	38	6 6-103169-7		4	1.790	.190	2.100	1.800	18	38	6 1-103169-7
	5	1.690	.190	2.000	1.700	17	36	6 6-103169-6		4	1.690	.190	2.000	1.700	17	36	1-103169-6
	5	1.590	.190	1.900	1.600	16	34	6-103169-5		4	1.590	.190	1.900	1.600	16	34	1-103169-5
	5	1.490	.190	1.800	1.500	15	32	6-103169-4		4	1.490	.190	1.800	1.500	15	32	1-103169-4
	5	1.390	.190	1.700	1.400	14	30	6-103169-3		4	1.390	.190	1.700	1.400	14	30	1-103169-3
	5	1.290	.190	1.600	1.300	13	28	6-103169-2		4	1.290	.190	1.600	1.300	13	28	1-103169-2
	5	1.190	.190	1.500	1.200	12	26	6-103169-1		4	1.190	.190	1.500	1.200	12	26	1-103169-1
	5	1.090	.190	1.400	1.100	11	24	6-103169-0		4	1.090	.190	1.400	1.100	11	24	1-103169-0
	5	.990	.190	1.300	1.000	10	22	6 5-103169-9		4	.990	.190	1.300	1.000	10	22	6 103169-9
	5	.890	.190	1.200	.900	9	20	5-103169-8		4	.890	.190	1.200	.900	9	20	103169-8
	5	—	.490	1.100	.800	8	18	5-103169-7		4	—	.490	1.100	.800	8	18	103169-7
	5	—	.390	1.000	.700	7	16	5-103169-6		4	—	.390	1.000	.700	7	16	103169-6
	5	—	.390	.900	.600	6	14	5-103169-5		4	—	.390	.900	.600	6	14	103169-5
	5	—	.290	.800	.500	5	12	5-103169-4		4	—	.290	.800	.500	5	12	103169-4
	5	—	.290	.700	.400	4	10	5-103169-3		4	—	.290	.700	.400	4	10	103169-3
	5	—	.190	.600	.300	3	8	5-103169-2		4	—	.190	.600	.300	3	8	103169-2
	5	—	.190	.500	.200	2	6	5-103169-1		4	—	.190	.500	.200	2	6	103169-1
PLATING		E	D	C	B	A	NO OF POSN	ASSEMBLY PART NUMBER	PLATING		E	D	C	B	A	NO OF POSN	ASSEMBLY PART NUMBER

THIS DRAWING IS A CONTROLLED DOCUMENT.

DIMENSIONS: INCHES

TOLERANCES UNLESS OTHERWISE SPECIFIED:
0 PLC ± –
1 PLC ± –
2 PLC ± –
3 PLC ± .005
4 PLC ± –
ANGLES ± –

MATERIAL HOUSING: FLAME RETARDANT THERMOPLASTIC COLOR-BLACK POSTS; PHOS BRONZE

FINISH SEE TABLE

DWN H.MOLL 04 SEP 87
CHK MAYER 04 SEP 87
APVD R. FEIDT 09 SEP 87
PRODUCT SPEC —
APPLICATION SPEC —
WEIGHT —

TE Connectivity

NAME HDR ASSY, MOD II, SHROUDED, 4 SIDES, DBL ROW, VERTICAL, .100X.100 C/L, WITH .025 SQ POSTS

SIZE	CAGE CODE	DRAWING NO	RESTRICTED TO
A1	00779	C-103169	—

CUSTOMER DRAWING SCALE 4:1 SHEET 1 OF 1 REV L2