- **LOW COST**
- **SHORT LEAD TIMES**
- **EXCELLENT FOR AC RIPPLE AND SWITCH MODE POWER SUPPLIES**
- **STABLE INDUCTANCE FROM NO LOAD TO FULL RATED CURRENT**
- **UNIVERSAL APPLICATIONS**
- **HIGH DC CURRENT HANDLING CAPABILITIES**
- **CUSTOM VERSIONS AVAILABLE**
- **SURFACE MOUNT VERSIONS AVAILABLE**
- **OTHER CONFIGURATIONS AVAILABLE (POT CORE, ROD CORE, EE CORE, RM CORE, ETC.)**

ELECTRICAL SPECIFICATIONS @25C

HORIZONTAL ENCAPSULATED CONFIGURATION

PART NUMBER	INDUCTANCE @1 .0kHz, 1.0V ± 10%	CURRENT RATING* AMPS DC	DCR OHMS (MAX)	PACKAGE STYLE
XF0010-HP	10uh	4.0	0.150	HP
XF0025-HP	25uh	3.5	0.150	HP
XF0050-HP	50uh	3.0	0.200	HP
XF0075-HP	75uh	2.5	0.250	HP
XF0100-HP	100uh	2.0	0.280	HP
XF0150-HP	150uh	2.0	0.360	HP
XF0250-HP	250uh	2.0	0.360	HP
XF0500-HP	500uh	1.0	1.100	HP
XF1000-HP	1000uh	0.5	2.400	HP

* Current that causes a maximum 15% drop in inductance.

VERTICAL ENCAPSULATED CONFIGURATION

PART NUMBER	INDUCTANCE @1kHz ± 10%	CURRENT RATING* (AMPS DC)	DCR OHMS (MAX)	L (NOM. INCHES)	W (NOM. INCHES)	H (NOM. INCHES)	T (NOM. INCHES)	E (NOM. INCHES)
XF0010-VP	10uh	3.0	.010	.750	.400	.750	.250	.036
XF0025-VP	25uh	2.0	.020	.750	.400	.750	.250	.032
XF0050-VP	50uh	1.5	.030	.750	.400	.750	.250	.028
XF0075-VP	75uh	1.0	.045	.750	.400	.750	.250	.025
XF0100-VP	100uh	1.0	.055	.750	.400	.750	.250	.025
1XF0010-VP	10uh	5.0	.015	.800	.500	.950	.350	.046
1XF0025-VP	25uh	4.0	.025	.800	.500	.950	.350	.040
1XF0050-VP	50uh	3.0	.035	.800	.500	.950	.350	.036
1XF0075-VP	75uh	2.5	.050	.800	.500	.950	.350	.032
1XF0100-VP	100uh	2.0	.070	.800	.500	.975	.350	.028
1XF0250-VP	250uh	1.5	.155	.800	.500	.975	.350	.023
2XF0025-VP	25uh	6.0	.020	1.160	.660	1.1752	.400	.051
2XF0050-VP	50uh	4.5	.030	1.160	.660	1.1752	.400	.056
2XF0075-VP	75uh	4.0	.035	1.160	.660	1.1752	.400	.040
2XF0100-VP	100uh	3.0	.050	1.160	.660	1.1752	.400	.036
2XF0250-VP	250uh	2.0	.090	1.160	.660	1.25	.400	.032
2XF0500-VP	500uh	1.5	.180	1.160	.660	1.25	.400	.028
2XF0750-VP	750uh	1.0	.250	1.160	.660	1.25	.400	.025

PART NUMBER	INDUCTANCE @1kHz ± 10%	CURRENT RATING* (AMPS DC)	DCR OHMS (MAX)	L (NOM. INCHES)	W (NOM. INCHES)	H (NOM. INCHES)	T (NOM. INCHES)	E (NOM. INCHES)
3XF0025-VP	25uh	10.0	.015	1.40	.800	1.40	.600	.064
3XF0050-VP	50uh	7.0	.020	1.40	.800	1.40	.600	.057
3XF0075-VP	75uh	6.0	.025	1.40	.800	1.40	.600	.051
3XF0100-VP	100uh	5.0	.030	1.40	.800	1.40	.600	.051
3XF0250-VP	250uh	3.0	.070	1.40	.800	1.40	.600	.040
3XF0500-VP	500uh	2.0	.130	1.40	.800	1.475	.600	.032
3XF0750-VP	750uh	2.0	.170	1.40	.800	1.475	.600	.032
3XF1000-VP	1000uh	1.5	.220	1.40	.800	1.475	.600	.028

Vertical open/horizontal open configuration (add suffix (VO or HO) to part number. (XX=VO or HO))

PART NUMBER	INDUCTANCE @1kHz ± 10%	CURRENT RATING* (AMPS DC)	DCR OHMS (MAX)	A (NOM. INCHES)	B (NOM. INCHES)	C (NOM. INCHES)	D (NOM. INCHES)	E ± .005	SRF(H) Mhz (MIN.)
XF0010-XX	10uh	3.0	.010	0.62	.25	.50	0.56	.036	35.0
XF0025-XX	25uh	2.0	.020	0.62	.25	.50	0.56	.032	10.0
XF0050-XX	50uh	1.5	.030	0.62	.25	.50	0.56	.028	7.0
XF0075-XX	75uh	1.0	.045	0.62	.25	.50	0.56	.025	5.0
XF0100-XX	100uh	1.0	.055	0.62	.25	.50	0.56	.025	4.0
1XF0010-XX	10uh	6.0	.015	0.82	.32	.50	0.72	.046	20.0
1XF0025-XX	25uh	4.0	.025	0.82	.32	.50	0.75	.040	8.0
1XF0050-XX	50uh	3.0	.035	0.82	.32	.50	0.75	.036	4.0
1XF0075-XX	75uh	2.5	.050	0.82	.32	.50	0.75	.032	3.0
1XF0100-XX	100uh	2.0	.070	0.82	.32	.50	0.72	.028	2.0
1XF0250-XX	250uh	1.5	.155	0.85	.35	.50	0.75	.023	1.0
2XF0025-XX	25uh	6.0	.020	1.10	.37	.50	1.02	.051	8.0
2XF0050-XX	50uh	4.5	.030	1.10	.40	.50	1.02	.046	4.0
2XF0075-XX	75uh	4.0	.035	1.10	.40	.50	1.02	.040	3.0
2XF0100-XX	100uh	3.0	.050	1.10	.40	.50	1.02	.036	2.0
2XF0250-XX	250uh	2.0	.090	1.15	.40	.50	1.02	.032	1.0
2XF0500-XX	500uh	1.5	.180	1.15	.40	.50	1.05	.028	.8
2XF0750-XX	750uh	1.0	.250	1.15	.40	.50	1.05	.025	.6
3XF0025-XX	25uh	10.0	.015	1.30	.56	.75	1.20	.064	8.0
3XF0050-XX	50uh	7.0	.020	1.30	.55	.75	1.15	.057	4.0
3XF0075-XX	75uh	6.0	.025	1.30	.55	.75	1.20	.051	3.0
3XF0100-XX	100uh	5.0	.030	1.30	.56	.75	1.20	.051	2.0
3XF0250-XX	250uh	3.0	.070	1.30	.56	.75	1.20	.040	1.0
3XF0500-XX	500uh	2.0	.130	1.30	.56	.75	1.20	.032	.8
3XF0750-XX	750uh	2.0	.170	1.30	.60	.75	1.25	.032	.6
3XF1000-XX	1000uh	1.5	.220	1.30	.60	.75	1.20	.028	.4

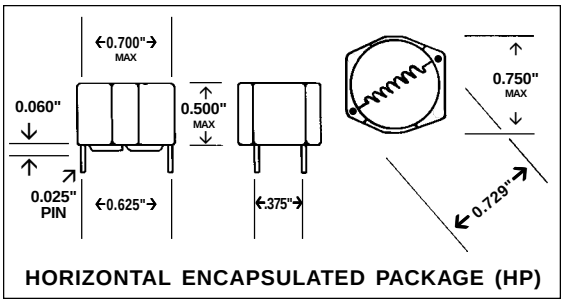

HORIZONTAL ENCAPSULATED PACKAGE (HP)

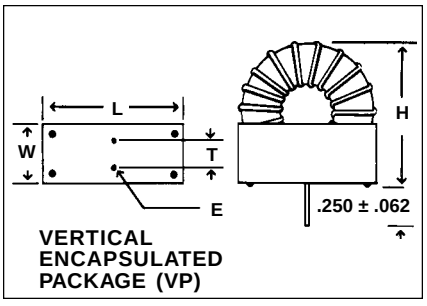

VERTICAL ENCAPSULATED PACKAGE (VP)

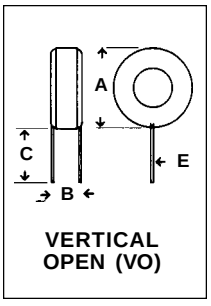

VERTICAL OPEN (VO)

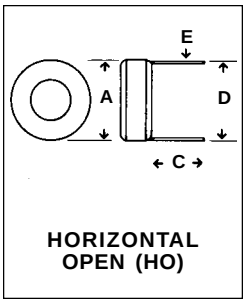

HORIZONTAL OPEN (HO)