RoHS

WEJ®

1SS184 SWITCHING DIODE

SOT-23 Plastic-Encapsulate DIODE

Features

- **Power dissipation**
  P_D : 150 mW (Tamb=25°C)
- **Forward Current**
  I_F : 100 mA
- **Reverse Voltage**
  V_R : 80V
- **Operating and storage junction temperature range**
  T_j, T_{stg} : -55°C to +150°C

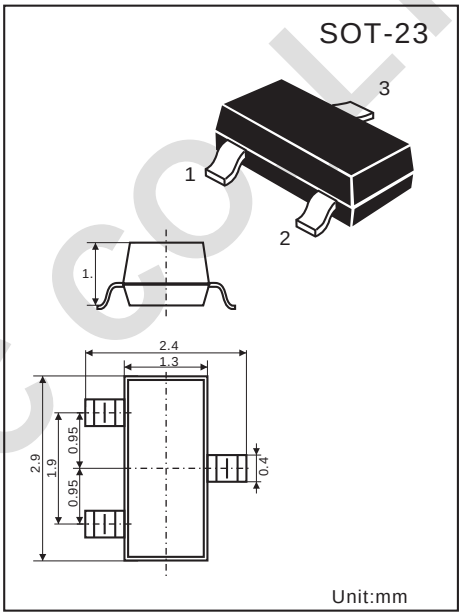

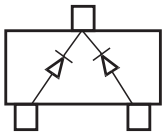

Marking:B3

ELECTRICAL CHARACTERISTICS

(Ta=25°C unless otherwise specified)

Parameter	Symbol	Test Condition	MIN.	MAX.	Unit
Reverse breakdown voltage	$V_{(BR)}$	I_R=100μA	80		V
Reverse Voltage leakage current	I_R	V_R=80V		0.5	μA
Forward Voltage	V_F	I_F=100mA		1.2	V
Diode Capacitance	C_{tot}	V_R=0V f=1MHz		3	pF
Reverse Recovery Time	t_{rr}	I_F=I_R=10mA I_{rr}=0.1I_R		4	nS

WEJ ELECTRONIC CO.LTD

RoHS

WEJ®

1SS184

Typical Characteristics

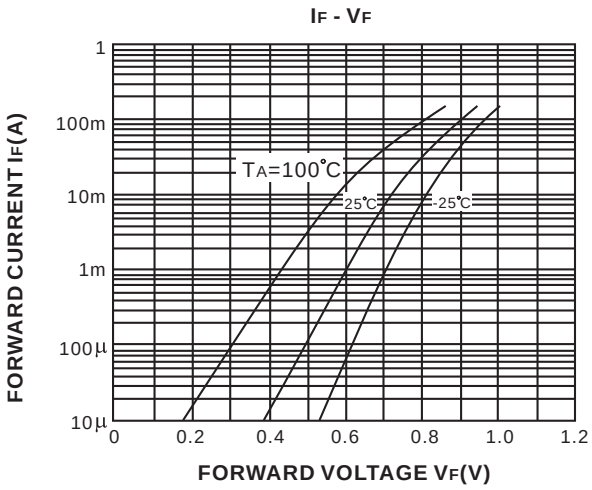

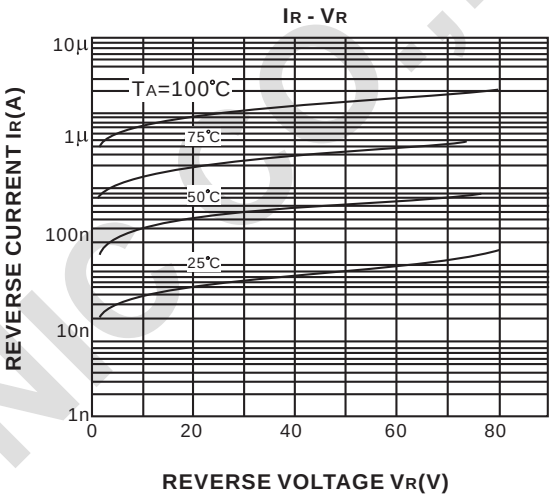

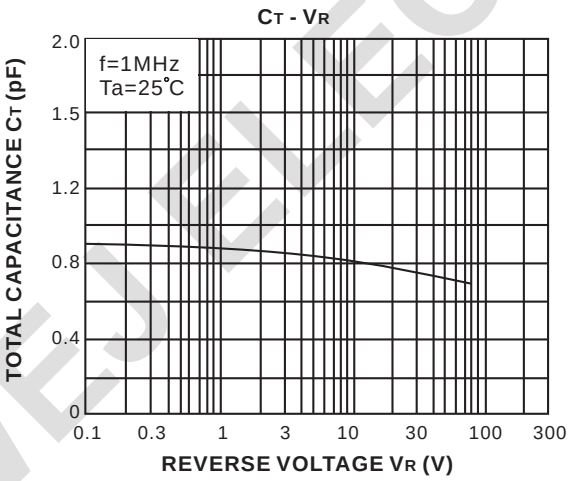

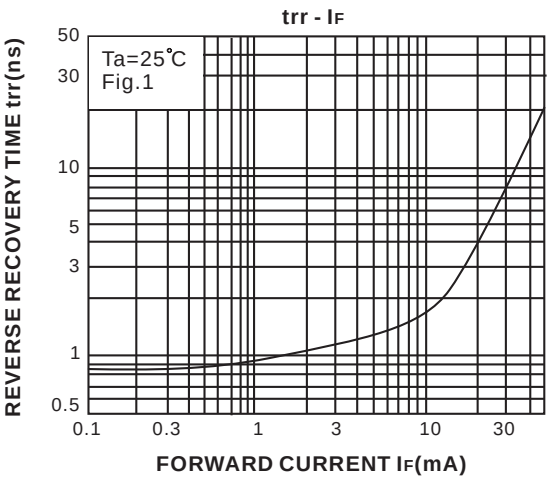

WEJ ELECTRONIC CO.,LTD