1SMB5913B - 1SMB5956B

SILICON ZENER DIODES

V_Z : 3.3 - 200 Volts
P_D : 3.0 Watts

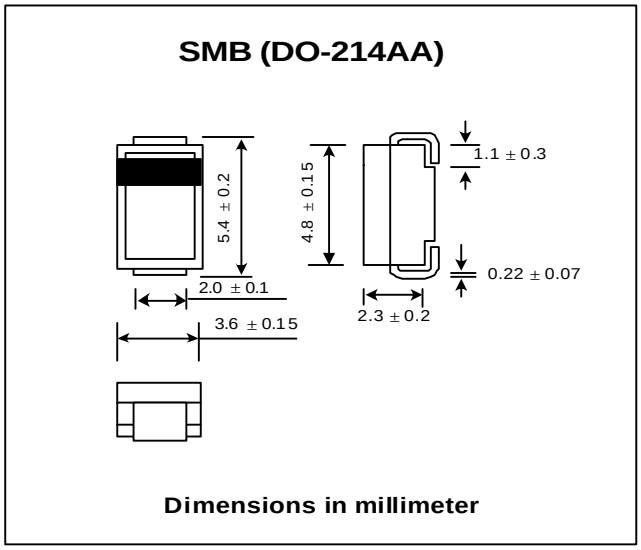

FEATURES :

* Complete Voltage Range 3.3 to 200 Volts
* High peak reverse power dissipation
* Flat handling surface for accurate placement
* Low leakage current
* Pb / RoHS Free

MECHANICAL DATA

* Case : SMB (DO-214AA) Molded plastic
* Epoxy : UL94V-O rate flame retardant
* Maximum Lead Temperature for Soldering Purposes :
  260 °C for 10 Seconds
* Leads : Modified L-Bend providing more contact area to bond pads.
* Polarity : Cathode indicated by polarity band.
* Mounting position : Any
* Weight : 0.093 gram

MAXIMUM RATINGS

Rating at 25 °C ambient temperature unless otherwise specified

Rating	Symbol	Value	Unit
Maximum Steady State Power Dissipation at T_L = 75 °C, Measured at Zero Lead Length	P_D	3.0	W
Derate Above 75 °C		40	mW/°C
Thermal Resistance From Junction to Lead	$R_{\theta JL}$	25	°C/W
Maximum Steady State Power Dissipation at Ta = 25 °C Measured at Zero Lead Length	P_D	550	mW
Derate Above 25 °C		4.4	mW/°C
Thermal Resistance From Junction to Ambient	$R_{\theta JA}$	226	°C/W
Maximum Forward Voltage at I_F = 200 mA , T_L = 30°C	V_F	1.5	Volts
Junction Temperature Range	T_J	- 65 to + 150	°C
Storage Temperature Range	Tstg	- 65 to + 150	°C

SYNSEMI SEMICONDUCTOR

ELECTRICAL CHARACTERISTICS

Rating at 25 °C ambient temperature unless otherwise specified

TYPE	Nominal Zener Voltage		Maximum Zener Impedance			Maximum Reverse Leakage Current		Maximum DC Zener Current
	V_Z @ I_{ZT}	I_{ZT}	Z_{ZT} @ I_{ZT}	Z_{ZK} @ I_{ZK}	I_{ZK}	I_R @ V_R		I_{ZM}
	(V)	(mA)	(Ω)	(Ω)	(mA)	(μA)	(V)	(mA)
1SMB5913B	3.3	113.6	10	500	1.0	100	1.0	454
1SMB5914B	3.6	104.2	9.0	500	1.0	75	1.0	416
1SMB5915B	3.9	96.1	7.5	500	1.0	25	1.0	384
1SMB5916B	4.3	87.2	6.0	500	1.0	5.0	1.0	348
1SMB5917B	4.7	79.8	5.0	500	1.0	5.0	1.5	319
1SMB5918B	5.1	73.5	4.0	500	1.0	5.0	2.0	294
1SMB5919B	5.6	66.9	2.0	250	1.0	5.0	3.0	267
1SMB5920B	6.2	60.5	2.0	200	1.0	5.0	4.0	241
1SMB5921B	6.8	55.1	2.5	200	1.0	50	5.2	220
1SMB5922B	7.5	50.0	3.0	400	0.5	50	6.0	200
1SMB5923B	8.2	45.7	3.5	400	0.5	50	6.5	182
1SMB5924B	9.1	41.2	4.0	500	0.5	50	7.0	164
1SMB5925B	10	37.5	4.5	500	0.25	50	8.0	150
1SMB5926B	11	34.1	5.5	550	0.25	50	8.4	136
1SMB5927B	12	31.2	6.5	550	0.25	1.0	9.1	125
1SMB5928B	13	28.8	7.0	550	0.25	1.0	9.9	115
1SMB5929B	15	25.0	9.0	600	0.25	1.0	11.4	100
1SMB5930B	16	23.4	10	600	0.25	1.0	12.2	93
1SMB5931B	18	20.8	12	650	0.25	1.0	13.7	83
1SMB5932B	20	18.7	14	650	0.25	1.0	15.2	75
1SMB5933B	22	17.0	17.5	650	0.25	1.0	16.7	68
1SMB5934B	24	15.6	19	700	0.25	1.0	18.2	62
1SMB5935B	27	13.9	23	700	0.25	1.0	20.6	55
1SMB5936B	30	12.5	26	750	0.25	1.0	22.8	50
1SMB5937B	33	11.4	33	800	0.25	1.0	25.1	45
1SMB5938B	36	10.4	38	850	0.25	1.0	27.4	41
1SMB5939B	39	9.6	45	900	0.25	1.0	29.7	38
1SMB5940B	43	8.7	53	950	0.25	1.0	32.7	34
1SMB5941B	47	8.0	67	1000	0.25	1.0	35.8	31
1SMB5942B	51	7.3	70	1100	0.25	1.0	38.8	29
1SMB5943B	56	6.7	86	1300	0.25	1.0	42.6	26
1SMB5944B	62	6.0	100	1500	0.25	1.0	47.1	24
1SMB5945B	68	5.5	120	1700	0.25	1.0	51.7	22
1SMB5946B	75	5.0	140	2000	0.25	1.0	56.0	20
1SMB5947B	82	4.6	160	2500	0.25	1.0	62.2	18
1SMB5948B	91	4.1	200	3000	0.25	1.0	69.2	16
1SMB5949B	100	3.7	250	3100	0.25	1.0	76.0	15
1SMB5950B	110	3.4	300	4000	0.25	1.0	83.6	13
1SMB5951B	120	3.1	380	4500	0.25	1.0	91.2	12
1SMB5952B	130	2.9	450	5000	0.25	1.0	98.8	11
1SMB5953B	150	2.5	600	6000	0.25	1.0	114.0	10
1SMB5954B	160	2.3	700	6500	0.25	1.0	121.6	9.0
1SMB5955B	180	2.1	900	7000	0.25	1.0	136.8	8.0
1SMB5956B	200	1.9	1200	8000	0.25	1.0	152.0	7.0

Note :

(1) Suffix " B " indicates ± 5% tolerance, suffix " A " indicates ± 10% tolerance.