淄博圣诺

1N60 1N65

Power MOSFET

1.0 Amps, 600/650 Volts
N-CHANNEL MOSFET

■ DESCRIPTION

1N60 1N65 is a high voltage MOSFET and is designed to have better characteristics, such as fast switching time, low gate charge, low on-state resistance and have a high rugged avalanche characteristics. This power MOSFET is usually used at high speed switching applications in power supplies, PWM motor controls, high efficient DC to DC converters and bridge circuits.

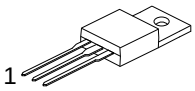

TO-220

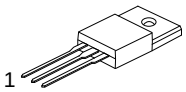

ITO-220/TO-220F

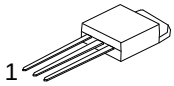

TO-251/IPAK

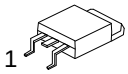

TO-252/DPAK

■ FEATURES

* $R_{DS(ON)}$ =11.5Ω@V_{GS} = 10V.
* Ultra Low gate charge (typical 5.0nC)
* Low reverse transfer capacitance (C_{RSS} = typical 3.0 pF)
* Fast switching capability
* Avalanche energy specified
* Improved dv/dt capability, high ruggedness

■ SYMBOL

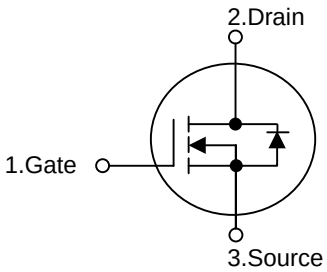

■ ORDERING INFORMATION

Ordering Number	Package	Pin Assignment		
		1	2	3
1N60	TO-220	G	D	S
	ITO-220/TO-220F	G	D	S
1N65	TO-251/IPAK	G	D	S
	TO-252/DPAK	G	D	S

Note: Pin Assignment: G: Gate D: Drain S: Source

Part No.	Package	Packing
1N6*-TU	TO-251	75pcs / Tube
1N6*-TR	TO-252	2.5Kpcs / 13” Reel
1N6*-TU	TO-252	75pcs / Tube
1N6*-TU	TO-220	50pcs / Tube
1N6*-TU	ITO-220/TO-220F	50pcs / Tube
1N6*-TU	TO-262	50pcs / Tube
1N6*-TU	TO-263	50pcs / Tube
1N6*-TR	TO-263	800pcs / 13" Reel

Downloaded from alldatasheet.com Alldatasheet

■ ABSOLUTE MAXIMUM RATINGS (T_C = 25℃, unless otherwise specified)

PARAMETER		SYMBOL	RATINGS	UNIT
Drain-Source Voltage	1N60	V_{DSS}	600	V
	1N65		650	V
Gate-Source Voltage		V_{GSS}	±30	V
Avalanche Current (Note 1)		I_{AR}	1.0	A
Continuous Drain Current		I_D	1.0	A
Pulsed Drain Current (Note 1)		I_{DM}	4.8	A
Avalanche Energy	Single Pulsed (Note 2)	E_{AS}	50	mJ
	Repetitive (Note 1)	E_{AR}	4.0	mJ
Peak Diode Recovery dv/dt (Note 3)		dv/dt	4.5	V/ns
Power Dissipation	TO-251/IPAK	P_D	28	W
	TO-252/DPAK		28	W
	TO-220		40	W
	TO-220F		21	W
	TO-92(T_a=25℃)		1	W
Junction Temperature		T_J	+150	℃
Operating Temperature		T_{OPR}	-55 ~ +150	℃
Storage Temperature		T_{STG}	-55 ~ +150	℃

Note: Absolute maximum ratings are those values beyond which the device could be permanently damaged. Absolute maximum ratings are stress ratings only and functional device operation is not implied.

■ THERMAL DATA

PARAMETER		SYMBOL	RATINGS	UNIT
Junction-to-Ambient	TO-251/IPAK	θ_{JA}	110	℃/W
	TO-252/DPAK		110	
	TO-220		62.5	
	TO-220F		62.5	
	TO-92		140	
Junction-to-Case	TO-251/IPAK	θ_{Jc}	4.53	℃/W
	TO-252/DPAK		4.53	
	TO-220		3.13	
	TO-220F		5.95	

Downloaded from alldatasheet.com Alldatasheet

■ ELECTRICAL CHARACTERISTICS (T_C=25℃, unless otherwise specified.)

PARAMETER		SYMBOL	TEST CONDITIONS	MIN	TYP	MAX	UNIT
OFF CHARACTERISTICS							
Drain-Source Breakdown Voltage	1N60	BV_{DSS}	V_{GS}=0V, I_D=250μA	600			V
	1N65			650			V
Drain-Source Leakage Current		I_{DSS}	V_{DS}=600V, V_{GS}=0V			10	μA
Gate-Source Leakage Current	Forward	I_{GSS}	V_{GS}=30V, V_{DS}=0V			100	nA
	Reverse		V_{GS}=-30V, V_{DS}=0V			-100	nA
Breakdown Voltage Temperature Coefficient		$\triangle BV_{DSS}/\triangle T_J$	I_D=250μA		0.4		V/℃
ON CHARACTERISTICS							
Gate Threshold Voltage		$V_{GS(TH)}$	V_{DS}=V_{GS}, I_D=250μA	2.0		4.0	V
Static Drain-Source On-State Resistance		$R_{DS(ON)}$	V_{GS}=10V, I_D=0.5A		9.3	11.5	Ω
DYNAMIC CHARACTERISTICS							
Input Capacitance		C_{ISS}	V_{DS}=25V, V_{GS}=0V, f=1MHz		120	150	pF
Output Capacitance		C_{OSS}			20	25	pF
Reverse Transfer Capacitance		C_{RSS}			3.0	4.0	pF
SWITCHING CHARACTERISTICS							
Turn-On Delay Time		$t_{D(ON)}$	V_{DD}=300V, I_D=1.0A, R_G=50Ω (Note 4,5)		5	20	ns
Turn-On Rise Time		t_R			25	60	ns
Turn-Off Delay Time		$t_{D(OFF)}$			7	25	ns
Turn-Off Fall Time		t_F			25	60	ns
Total Gate Charge		Q_G	V_{DS}=480V, V_{GS}=10V, I_D=1.0A (Note 4,5)		5.0	6.0	nC
Gate-Source Charge		Q_{GS}			1.0		nC
Gate-Drain Charge		Q_{GD}			2.6		nC
SOURCE-DRAIN DIODE RATINGS AND CHARACTERISTICS							
Drain-Source Diode Forward Voltage		V_{SD}	V_{GS}=0V, I_S =1.0A			1.4	V
Maximum Continuous Drain-Source Diode Forward Current		I_S				1.2	A
Maximum Pulsed Drain-Source Diode Forward Current		I_{SM}				4.8	A
Reverse Recovery Time		t_{RR}	V_{GS}=0V, I_S=1.0A dI_F/dt=100A/μs (Note1)		160		ns
Reverse Recovery Charge		Q_{RR}			0.3		μC

Note: 1. Repetitive Rating: Pulse width limited by maximum junction temperature
2. L = 60mH, I_{AS} = 1A, V_{DD} = 50V, R_G = 25Ω, Starting T_J = 25°C
3. I_{SD} ≤ 1.0A, di/dt ≤ 200A/μs, V_{DD} ≤ BV_{DSS}, Starting T_J = 25°C
4. Pulse Test: Pulse Width ≤300μs, Duty Cycle≤2%
5. Essentially Independent of Operating Temperature

Downloaded from alldatasheet.com Alldatasheet

■ TEST CIRCUITS AND WAVEFORMS

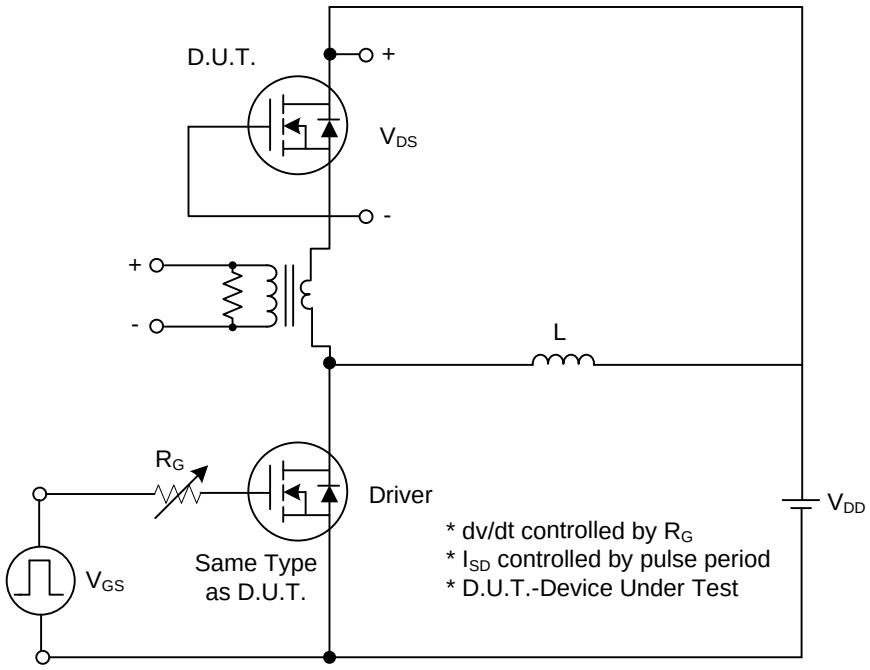

Fig. 1A Peak Diode Recovery dv/dt Test Circuit

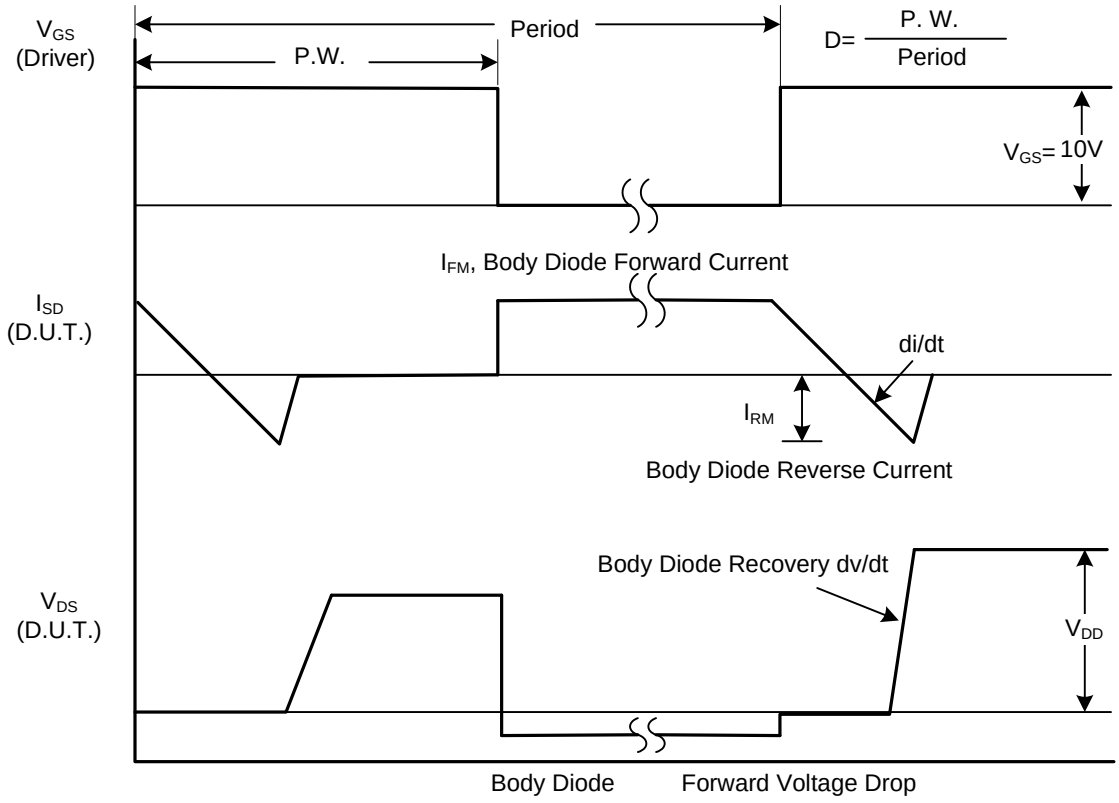

Fig. 1B Peak Diode Recovery dv/dt Waveforms

Downloaded from alldatasheet.com Alldatasheet

■ TEST CIRCUITS AND WAVEFORMS (Cont.)

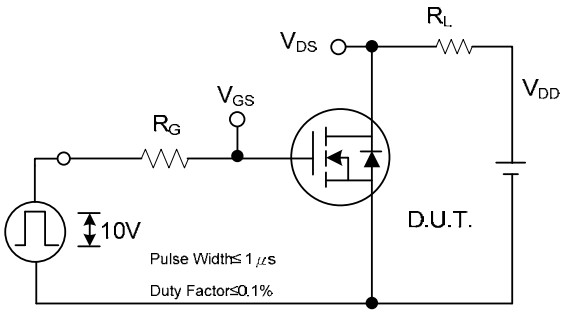

Fig. 2A Switching Test Circuit

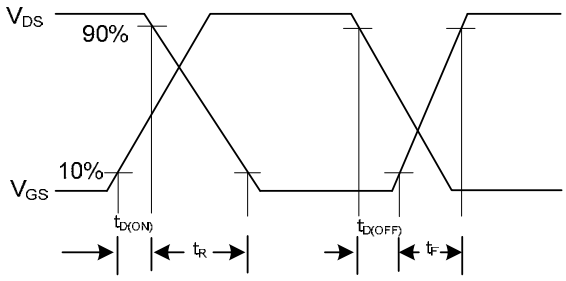

Fig. 2B Switching Waveforms

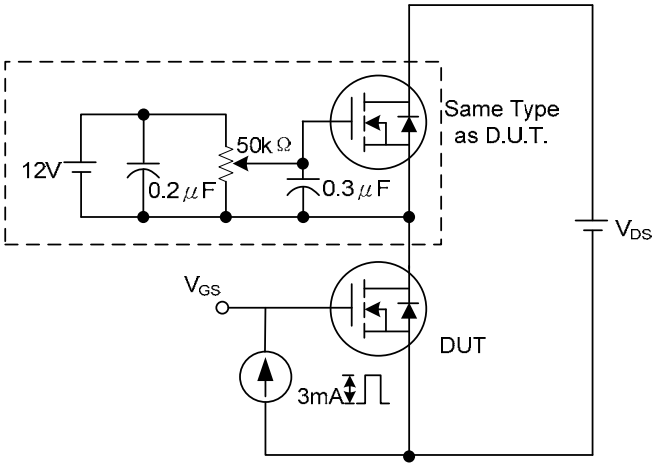

Fig. 3A Gate Charge Test Circuit

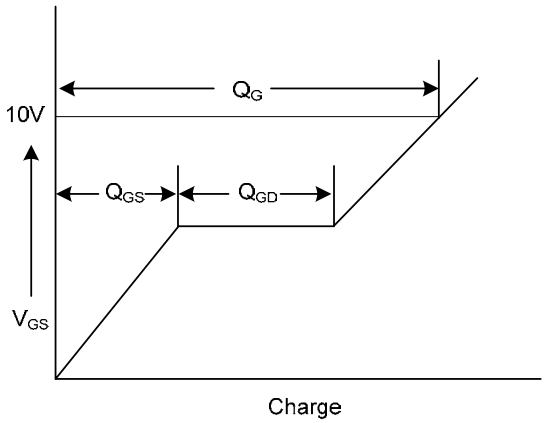

Fig. 3B Gate Charge Waveform

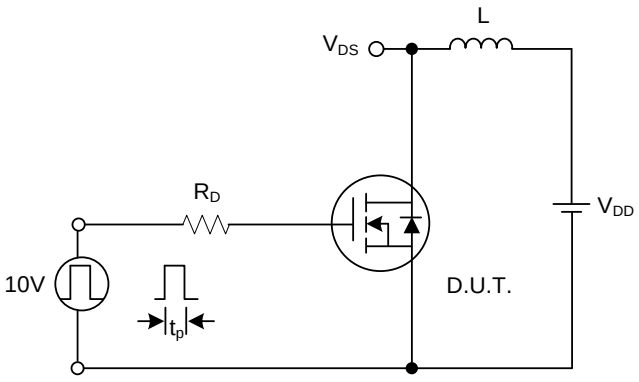

Fig. 4A Unclamped Inductive Switching Test Circuit

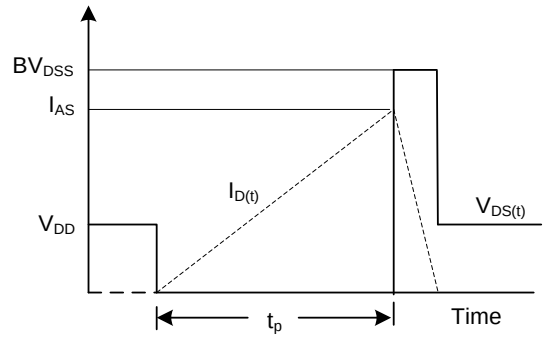

Fig. 4B Unclamped Inductive Switching Waveforms

Downloaded from alldatasheet.com Alldatasheet

■ TYPICAL CHARACTERISTICS

Drain Current vs.
Source to Drain Voltage

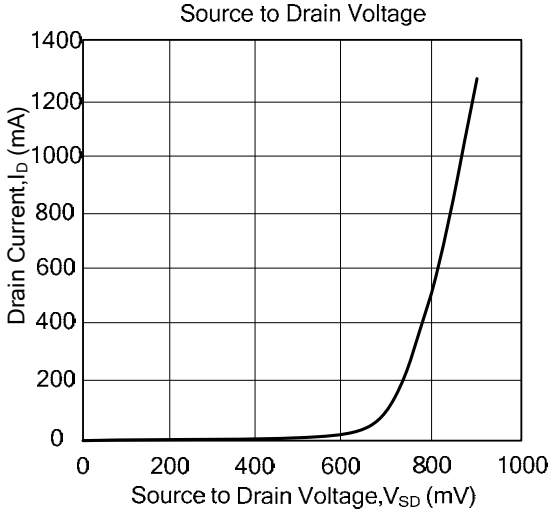

Drain-Source On-State
Resistance Characteristics

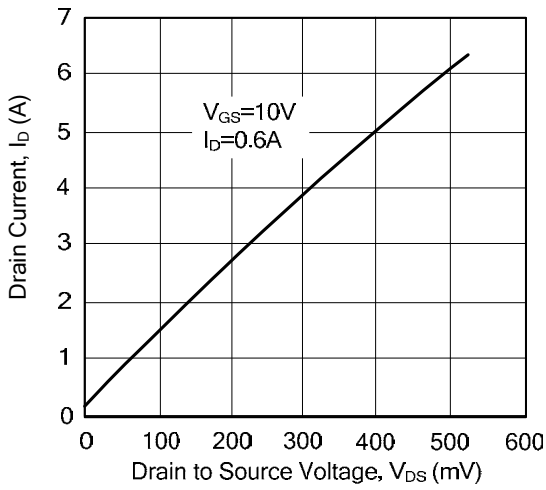

Drain Current vs.
Gate Threshold Voltage

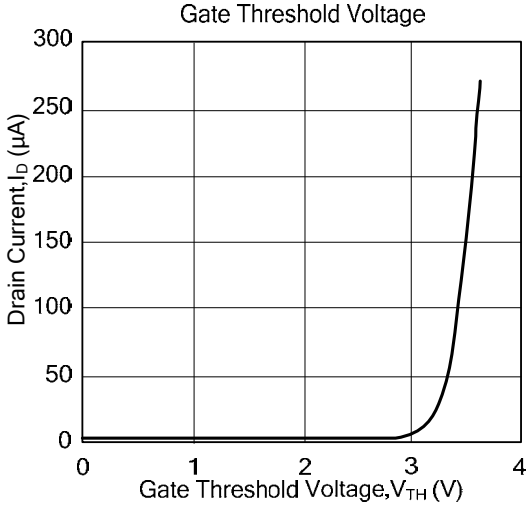

Drain Current vs.
Drain-Source Breakdown Voltage

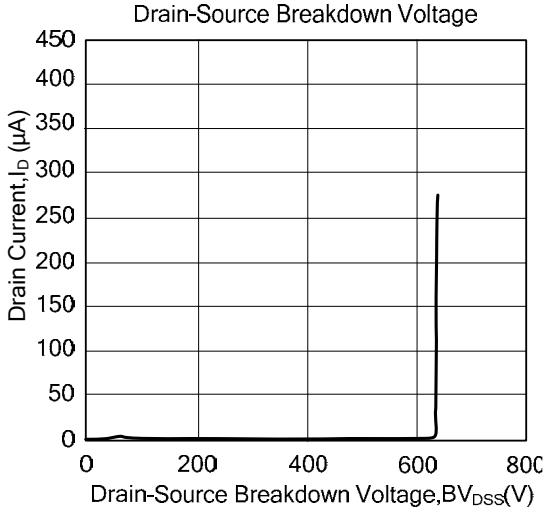

Downloaded from alldatasheet.com Alldatasheet