FEATURES :

- 7PIN SIP Package
- High Efficiency up to 88%
- Unregulated Output Types
- Internal SMD Construction
- Industry Standard Pinout
- Operating Temperature:-40℃ TO +85℃

Specifications typical at TA=25°C, nominal input voltage and rated output current unless otherwise specified

Part Number	Output Voltage	Output Current	Ripple & Noise		Efficiency
	Vdc	mA	Typ (mVp-p)	Max (mVp-p)	%Typ
19DA-05S05N	5	400	40	60	82
19DA-05S09N	9	222	40	60	86
19DA-05S12N	12	167	50	80	87
19DA-05S15N	15	133	50	80	86
19DA-12S05N	5	400	40	60	83
19DA-12S09N	9	222	40	60	87
19DA-12S12N	12	167	50	80	88
19DA-12S15N	15	133	50	80	87
19DA-15S05N	5	400	40	60	84
19DA-15S09N	9	222	40	60	86
19DA-15S12N	12	167	50	80	87
19DA-15S15N	15	133	50	80	88
19DA-24S05N	5	400	40	60	84
19DA-24S09N	9	222	40	60	87
19DA-24S12N	12	167	50	80	87
19DA-24S15N	15	133	50	80	88
19DA-05D05N	±5	±200	50	80	82
19DA-05D09N	±9	±111	50	80	85
19DA-05D12N	±12	±84	50	80	86
19DA-05D15N	±15	±67	50	80	86
19DA-12D05N	±5	±200	50	80	84
19DA-12D09N	±9	±111	50	80	87
19DA-12D12N	±12	±84	50	80	87
19DA-12D15N	±15	±67	50	80	87
19DA-15D05N	±5	±200	50	80	84
19DA-15D09N	±9	±111	50	80	86
19DA-15D12N	±12	±84	50	80	88
19DA-15D15N	±15	±67	50	80	88
19DA-24D05N	±5	±200	50	80	85
19DA-24D09N	±9	±111	50	80	87
19DA-24D12N	±12	±84	50	80	88
19DA-24D15N	±15	±67	50	80	88

Input Specifications

Parameters	Conditions	Min	Typ	Max	Units
Voltage Tolerance	Vo,Io Nom			±10	%
Filter	Capacitor				

YUAN DEAN SCIENTIFIC

DC-DC Converter

19DA SERIES

2Watt

1KV Isolated

Single & Dual Output

SIP7

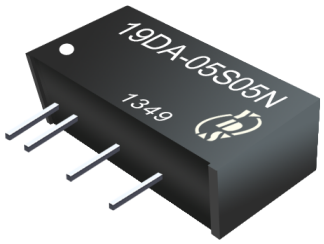

RoHS COMPLIANT

3 YEARS WARRANTY

Temperature Derating Graph

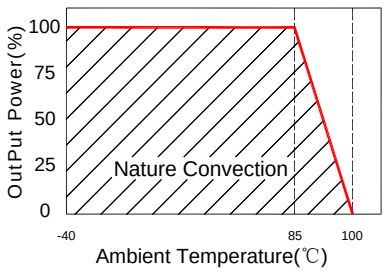

www.yds.com.tw

TEL：886-6-3842899 FAX：886-6-3843288
E-MAIL：ydsweb@yds.com.tw

Rev:o 2017/5/10

Output Specifications

Parameters	Conditions	Min	Typ	Max	Units
Voltage Tolerance	100% full load			±5	%
Short Circuit Protection	Short Term			1	Sec
Line Regulation	For 1.0% OF Vin		1.2		%
Load Regulation	5V,9V (10% To 100% F.L)			10	%
Load Regulation	12V,15V (10% To 100% F.L.)			7	%
Load Regulation	±5V,±9V (10% To 100% F.L)			9	%
Load Regulation	±12V,±15V (10% To 100% F.L)			6	%

General Specifications

Parameters	Conditions	Min	Typ	Max	Units
Isolation Resistance	500Vdc	1000			MΩ
Switching Frequency	Full load, nominal input		75		KHz
Operating Temperature		-40		+85	℃
Humidity	Non Condensing			95	%
Cooling	Free air Convection				
Case material	DAP				
MTBF	MIL-HDBK-217F @25℃	3500000			Hours
Weight			2.7		g
Dimensions			19.5x7.1x10.0		mm

Markings and dimensions

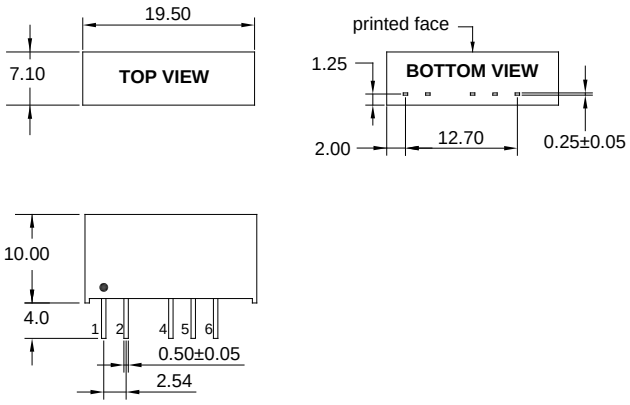

Unit : mm Unless otherwise specified, all tolerances are ±0.25

PIN Connection

PIN	1	2	4	5	6
Single	+Vin	-Vin	-Vout	No Pin	+Vout
Dual	+Vin	-Vin	-Vout	Com	+Vout

Part Number

19DA - 05 S 05 N
A B C D E

A:Series
B:Input Voltage
C:Single(S)Dual(D)
D:Output Voltage
E:Unregulated(N)

Recommended Test Circuit

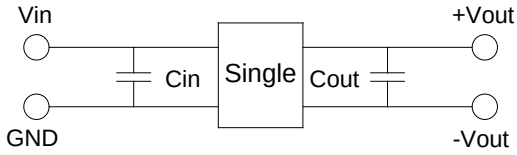

5V :Cin	4.7uF,25V	5V :Cout	10uF,25V
12V:Cin	2.2uF,25V	9V :Cout	4.7uF,25V
15V:Cin	1uF,50V	12V:Cout	2.2uF,25V
24V:Cin	1uF,50V	15V:Cout	1uF,50V

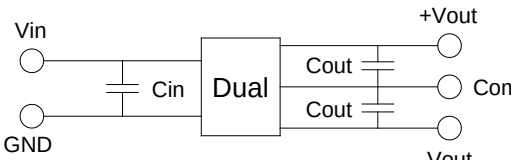

5V :Cin	4.7uF,25V	5V :Cout	10uF,25V
12V:Cin	2.2uF,25V	9V :Cout	4.7uF,25V
15V:Cin	1uF,50V	12V:Cout	2.2uF,25V
24V:Cin	1uF,50V	15V:Cout	1uF,50V

Packaging

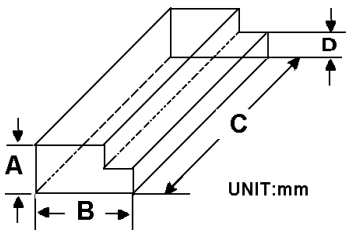

Size(mm)			
A	B	C	D
9.50	16.50	522	5.00

www.yds.com.tw
TEL：886-6-3842899 FAX：886-6-3843288
E-MAIL：ydsweb@yds.com.tw
Rev:o 2017/5/10