Product data sheet
Characteristics

199DX-2
Power relay, SE Relays, SPST-DM, 40A, 12 VDC, open type



Main

Product Type	Power relay
Switch Function	SPST-NO-DM
Contact Composition	1 NO
Cover Type	Open cover

Complementary

Input Current	40 A
Contacts Material	Silver alloy contacts
Contact Operation	Double action
Rated Operational Voltage	6...600 V AC 50-60 Hz 6...250 V DC
Minimum Switching Current	1000 mA 5 V AC/DC
Coil Resistance	70 Ohm
Drop-out Voltage Threshold	>= 0.1 Uc AC/DC
Rated Operational Current	40 A at 300 V AC (on resistive load) conforming to UL 40 A at 28 V DC (on resistive load) conforming to UL 12 A at 480 V AC (on resistive load) conforming to UL 10 A at 600 V AC (on resistive load) conforming to UL 15 A at 120 V AC (tungsten filament) conforming to UL
Power consumption in W	4 W DC
Power consumption in VA	10 VA AC
Voltage Range	0.85...1.1 Un AC/DC
Maximum Switching Voltage	600 V DC
Motor Power HP	2 hp 120...600 V AC 50/60 Hz
Connections Terminals	screw terminal
Wire Range	AWG 14
Terminal Tightening Torque	10.62…15.05 lbf.in (1.2…1.7 N.m)

Disclaimer: This documentation is not intended as a substitute for and is not to be used for determining suitability or reliability of these products for specific user applications

Environment

Ambient Air Temperature for Operation	-67…131 °F (-55…55 °C)
Ambient Air Temperature for Storage	-67…212 °F (-55…100 °C)
Product Certifications	UL Listed CSA CE
Electrical Durability	100000 cycles resistive DC load
Dielectric Strength	2200 V AC between coil and contact 2200 V AC between poles 1500 V AC between open contacts

Ordering and shipping details

GTIN	03606480276002

Offer Sustainability

Sustainable offer status	Green Premium product
California proposition 65	WARNING: This product can expose you to chemicals including: Nickel compounds, which is known to the State of California to cause cancer, and Di-isodecyl phthalate (DIDP), which is known to the State of California to cause birth defects or other reproductive harm. For more information go to www.P65Warnings.ca.gov
REACh Regulation	REACh Declaration
REACh free of SVHC	Yes
EU RoHS Directive	Pro-active compliance (Product out of EU RoHS legal scope) EU RoHS Declaration
Toxic heavy metal free	Yes
Mercury free	Yes
RoHS exemption information	Yes
China RoHS Regulation	China RoHS declaration
Environmental Disclosure	Product Environmental Profile
WEEE	The product must be disposed on European Union markets following specific waste collection and never end up in rubbish bins.

Approximate Dimensions

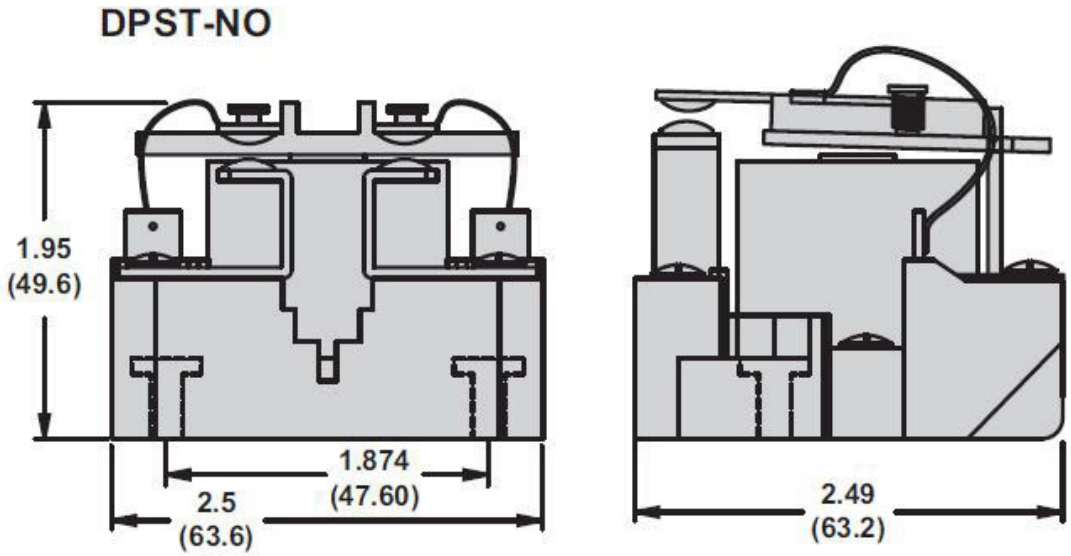

Connections and Wiring Diagrams

