Feed-through header - PC 6-16/ 5-G1F-10,16 - 1999039

Please be informed that the data shown in this PDF Document is generated from our Online Catalog. Please find the complete data in the user's documentation. Our General Terms of Use for Downloads are valid (http://phoenixcontact.com/download)



The figure shows a 5-pos. version of the product

PCB headers, nominal current: 76 A, rated voltage (III/2): 1000 V, nominal cross section: 16 mm², number of positions: 5, pitch: 10.16 mm, color: green, contact surface: Silver, mounting: Wave soldering, pin layout: Linear pinning, solder pin [P]: 4 mm

Your advantages

- Well-known mounting principle allows worldwide use
- Screwable flange for superior mechanical stability
- Maximum flexibility when it comes to device design – one header for connectors with different connection technologies

Key Commercial Data

Packing unit	50 pc
GTIN	4 046356 038539
GTIN	4046356038539

Technical data

Item properties

Brief article description	Feed-through header
Plug-in system	POWER COMBICON 16
Type of contact	Male connector
Range of articles	PC 6-16/..-G1F
Pitch	10.16 mm
Number of positions	5
Mounting type	Wave soldering
Pin layout	Linear pinning
Locking	Threaded flange
Number of levels	1
Number of connections	5
Number of potentials	5

Feed-through header - PC 6-16/ 5-G1F-10,16 - 1999039

Technical data

Electrical parameters

Nominal current	76 A
Nom. voltage	1000 V
Rated voltage	1000 V
Rated voltage (III/2)	1000 V
Rated voltage (II/2)	1000 V
Rated surge voltage (III/3)	8 kV
Rated surge voltage (III/2)	8 kV
Rated surge voltage (II/2)	6 kV

Material data - contact

Note	WEEE/RoHS-compliant, free of whiskers according to IEC 60068-2-82/ JEDEC JESD 201
Contact material	Cu alloy
Surface characteristics	Electroplated silver
Metal surface contact area (top layer)	Silver (4 - 8 µm Ag)
Metal surface contact area (middle layer)	Nickel (2 - 4 µm Ni),
Metal surface soldering area (top layer)	Silver (4 - 8 µm Ag)
Metal surface soldering area (middle layer)	Nickel (2 - 4 µm Ni)

Material data - housing

Housing color	green (6021)
Insulating material	PA
Insulating material group	I
CTI according to IEC 60112	600
Flammability rating according to UL 94	V0
Glow wire flammability index GWFI according to EN 60695-2-12	850
Glow wire ignition temperature GWIT according to EN 60695-2-13	775
Temperature for the ball pressure test according to EN 60695-10-2	125 °C

Dimensions for the product

Length [l]	34 mm
Width [w]	68.56 mm
Height [h]	17.4 mm
Pitch	10.16 mm
Height (without solder pin)	13.4 mm
Solder pin [P]	4 mm
Pin spacing	10.16 mm
Pin dimensions	1 x 1.2 mm

Dimensions for PCB design

Hole diameter	1.7 mm
Pin spacing	10.16 mm

Packaging information

Feed-through header - PC 6-16/ 5-G1F-10,16 - 1999039

Technical data

Packaging information

Type of packaging	packed in cardboard
Pieces per package	50
Denomination packing units	Pcs.

General product information

Note	In accordance with IEC 61984, COMBICON connectors have no switching power (COC). During designated use, they must not be plugged in or disconnected when carrying voltage or under load.
	In accordance with IEC 61984, COMBICON connectors have no switching power (COC). During designated use, they must not be plugged in or disconnected when carrying voltage or under load.

Ambient conditions

Ambient temperature (storage/transport)	-40 °C ... 70 °C
Ambient temperature (assembly)	-5 °C ... 100 °C
Ambient temperature (operation)	-40 °C ... 100 °C (dependent on the derating curve)

Air clearances and creepage distances

Clearances and creepage distances	IEC 60664-1:2007-04
Specification	IEC 60664-1:2007-04
Minimum clearance - inhomogeneous field (III/3)	8 mm
Minimum clearance - inhomogeneous field (III/2)	8 mm
Minimum clearance - inhomogeneous field (II/2)	5.5 mm
Minimum creepage distance value (III/3)	12.5 mm
Minimum creepage distance value (III/2)	5 mm
Minimum creepage distance value (II/2)	5 mm

Current carrying capacity / derating curves

Caption	Type: PC 16/...-STF-10,16 with PC 6-16/...-G1F-10,16
Specification	IEC 61984:2008-10
Reduction factor	0.8
Note	Representation based on IEC 60512-5-2:2002-02
	For number of positions, see diagram

Mechanical tests (A)

Test specification	IEC 61984
Insertion strength per pos. approx.	14 N
Withdraw strength per pos. approx.	12 N
Polarization when inserted requirement >20 N	Test passed
Contact holder in insert requirements >20 N	Test passed

Durability tests (B)

Specification	IEC 60512-9-1:2010-03
Contact resistance R_1	0.3 mΩ
Insertion/withdrawal cycles	50

Feed-through header - PC 6-16/ 5-G1F-10,16 - 1999039

Technical data

Durability tests (B)

Contact resistance R_2	0.3 mΩ
Impulse withstand voltage at sea level	9.8 kV
Power-frequency withstand voltage	4.26 kV
Insulation resistance, neighboring positions	> 4 GΩ

Thermal tests (C)

Specification	IEC 60512-5-1:2002-02
Number of positions	8
Conductor cross section	16 mm²
Test current	76 A
Upper limiting temperature requirements <100 °C	Test passed

Climatic tests (D)

Specification	ISO 6988:1985-02
Cold stress	-40 °C/2 h
Thermal stress	105 °C/168 h
Corrosive stress	0.2 dm^3 SO_2 on 300 dm^3/40 °C/1 cycle
Impulse withstand voltage at sea level	9.8 kV
Power-frequency withstand voltage	4.26 kV

Environmental and durability tests (E)

Specification	IEC 61984:2008-10
Result, degree of protection, IP code	Back of hand safety with IP10 access probe

Standards and Regulations

Connection in acc. with standard	EN-VDE
	CUL
Flammability rating according to UL 94	V0

Environmental Product Compliance

China RoHS	Environmentally friendly use period: unlimited = EFUP-e
	No hazardous substances above threshold values

Drawings

Feed-through header - PC 6-16/ 5-G1F-10,16 - 1999039

Drilling diagram

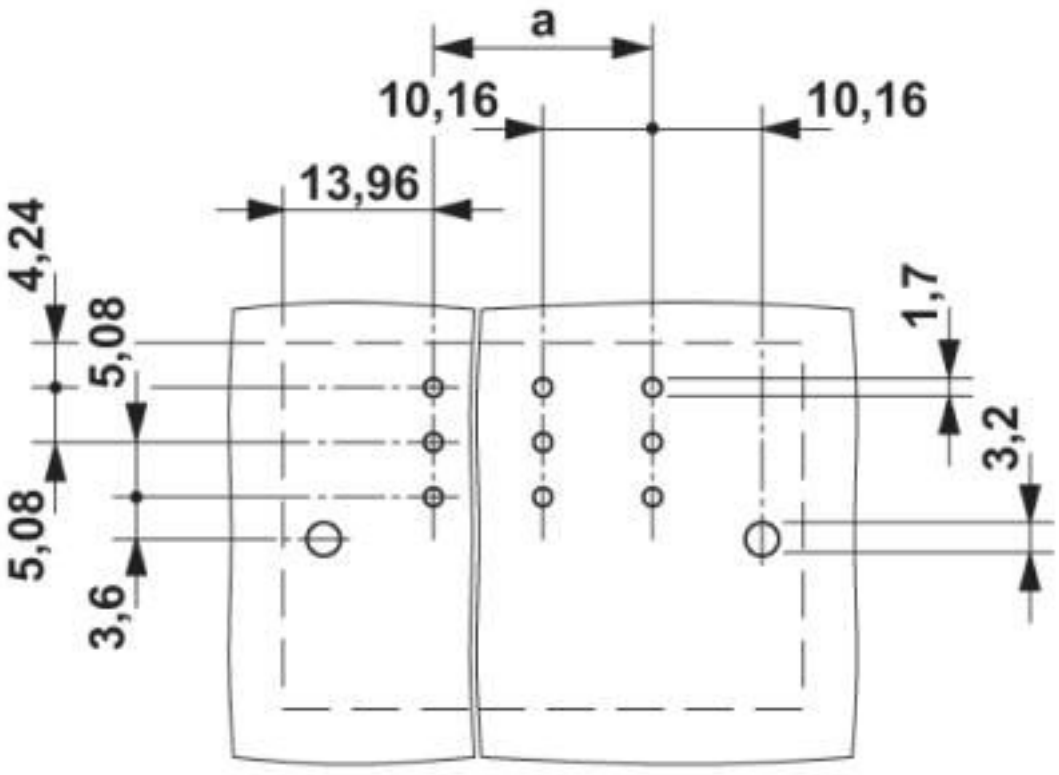

Diagram

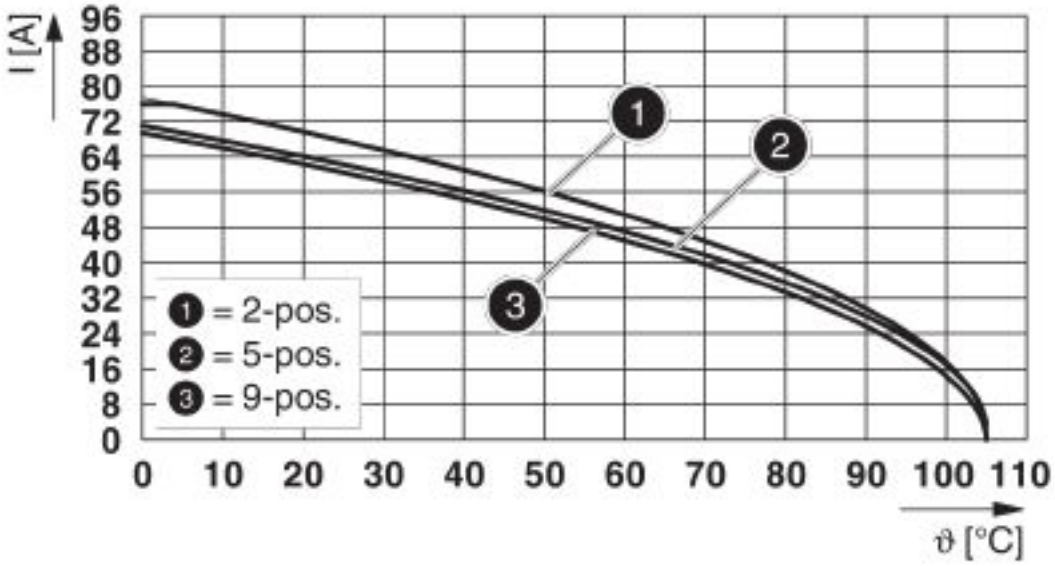

Type: PC 16/...-STF-10,16 with PC 6-16/...-G1F-10,16

Feed-through header - PC 6-16/ 5-G1F-10,16 - 1999039

Dimensional drawing

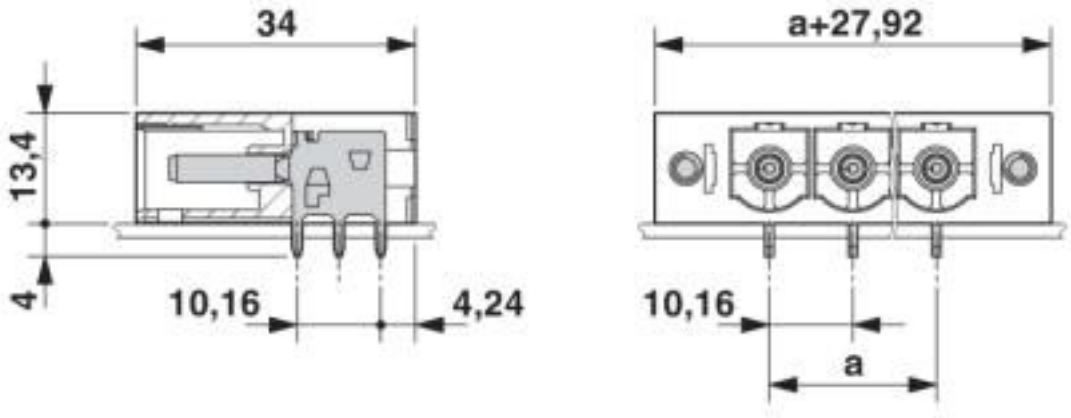

Classifications

eCl@ss

eCl@ss 10.0.1	27440402
eCl@ss 4.0	27260700
eCl@ss 4.1	27260700
eCl@ss 5.0	27260700
eCl@ss 5.1	27260700
eCl@ss 6.0	27260700
eCl@ss 7.0	27440402
eCl@ss 8.0	27440402
eCl@ss 9.0	27440402

ETIM

ETIM 3.0	EC001121
ETIM 4.0	EC002637
ETIM 5.0	EC002637
ETIM 6.0	EC002637
ETIM 7.0	EC002637

UNSPSC

UNSPSC 6.01	30211810
UNSPSC 7.0901	39121409
UNSPSC 11	39121409
UNSPSC 12.01	39121409
UNSPSC 13.2	39121409
UNSPSC 18.0	39121409
UNSPSC 19.0	39121409
UNSPSC 20.0	39121409
UNSPSC 21.0	39121409

Feed-through header - PC 6-16/ 5-G1F-10,16 - 1999039

Approvals

Approvals

Approvals

IECEE CB Scheme / SEV / EAC / cULus Recognized

Ex Approvals

Approval details

IECEE CB Scheme		http://www.iecee.org/	CH-10653-M1

Nominal voltage UN	1000 V
Nominal current IN	76 A

SEV		https://www.eurofins.ch/de/	IK-4468-M1

Nominal voltage UN	1000 V
Nominal current IN	76 A

EAC		B.01687

cULus Recognized		http://database.ul.com/cgi-bin/XYV/template/LISEXT/1FRAME/index.htm	E60425-20040202

	B	C	D
Nominal voltage UN	300 V	300 V	600 V
Nominal current IN	66 A	66 A	5 A

Accessories

Accessories

Coding element

Feed-through header - PC 6-16/ 5-G1F-10,16 - 1999039

Accessories

Coding profile - CP-PC RD - 1701967



Coding profile, for plugging into the coding ribs of the plug at a later date, insulating material, color: Red

Mounting material

Accessories - DFK-PC 16-SS - 1705449



Screw set for DFK-PC 16... connectors

Additional products

Printed-circuit board connector - SPC 16/ 5-STF-10,16 - 1711404



PCB connector, nominal current: 76 A, rated voltage (III/2): 1000 V, nominal cross section: 16 mm², number of positions: 5, pitch: 10.16 mm, connection method: Push-in spring connection, color: green, contact surface: Silver

Printed-circuit board connector - TPC 16/ 5-STF-10,16 - 1715280



PCB connector, nominal current: 76 A, rated voltage (III/2): 1000 V, nominal cross section: 16 mm², number of positions: 5, pitch: 10.16 mm, connection method: Screw connection with tension sleeve, color: green, contact surface: Silver

Printed-circuit board connector - PC 6/ 5-STF-10,16 - 1913604



PCB connector, nominal current: 41 A, rated voltage (III/2): 1000 V, nominal cross section: 6 mm², number of positions: 5, pitch: 10.16 mm, connection method: Screw connection with tension sleeve, color: green, contact surface: Silver

Feed-through header - PC 6-16/ 5-G1F-10,16 - 1999039

Accessories

Printed-circuit board connector - PC 16/ 5-STF-10,16 - 1967485



PCB connector, nominal current: 76 A, rated voltage (III/2): 1000 V, nominal cross section: 16 mm², number of positions: 5, pitch: 10.16 mm, connection method: Screw connection with tension sleeve, color: green, contact surface: Silver

Phoenix Contact 2020 © - all rights reserved
http://www.phoenixcontact.com

PHOENIX CONTACT GmbH & Co. KG
Flachsmarktstr. 8
32825 Blomberg
Germany
Tel. +49 5235 300
Fax +49 5235 3 41200
http://www.phoenixcontact.com