Printed-circuit board connector - FMC 1,5/12-ST-3,5-RF - 1952128

Please be informed that the data shown in this PDF Document is generated from our Online Catalog. Please find the complete data in the user's documentation. Our General Terms of Use for Downloads are valid (http://phoenixcontact.com/download)

PCB connector, nominal current: 8 A, rated voltage (III/2): 160 V, nominal cross section: 1.5 mm², number of positions: 12, pitch: 3.5 mm, connection method: Push-in spring connection, color: green, contact surface: Tin



The figure shows a 10-position version of the product

Your advantages

- Time saving push-in connection, tools not required
- Defined contact force ensures that contact remains stable over the long term
- Intuitive use through colour coded actuation lever
- Operation and conductor connection from one direction enable integration into front of device
- Intuitive locking mechanism prevents accidental disconnection

Key Commercial Data

Packing unit	50 pc
GTIN	4 017918 942762
GTIN	4017918942762

Technical data

Item properties

Brief article description	Printed-circuit board connector
Plug-in system	MINI COMBICON
Type of contact	Female connector
Range of articles	FMC 1,5/..-ST-RF
Pitch	3.5 mm
Number of positions	12
Connection method	Push-in spring connection
Locking	Self-locking flange
Number of levels	1
Number of connections	12

Printed-circuit board connector - FMC 1,5/12-ST-3,5-RF - 1952128

Technical data

Item properties

Number of potentials	12

Electrical parameters

Nominal current	8 A
Nom. voltage	160 V
Rated voltage	160 V
Rated voltage (III/2)	160 V
Rated voltage (II/2)	320 V
Rated surge voltage (III/3)	2.5 kV
Rated surge voltage (III/2)	2.5 kV
Rated surge voltage (II/2)	2.5 kV

Connection capacity

Connection method	Push-in spring connection
pluggable	Yes
Conductor cross section solid	0.2 mm² ... 1.5 mm²
Conductor cross section flexible	0.2 mm² ... 1.5 mm²
Conductor cross section AWG / kcmil	24 ... 16
Conductor cross section flexible, with ferrule without plastic sleeve	0.25 mm² ... 1.5 mm²
Conductor cross section, flexible, with ferrule, with plastic sleeve	0.14 mm² ... 0.75 mm²
Stripping length	10 mm

Specifications for ferrules

Recommended crimping pliers	1212034 CRIMPFOX 6
Ferrules without insulating collar, according to DIN 46228-1	Cross section: 0.25 mm²; Length: 7 mm
	Cross section: 0.34 mm²; Length: 7 mm
	Cross section: 0.5 mm²; Length: 8 mm ... 10 mm
	Cross section: 0.75 mm²; Length: 8 mm ... 10 mm
	Cross section: 1 mm²; Length: 8 mm ... 10 mm
	Cross section: 1.5 mm²; Length: 10 mm
Recommended crimping pliers	1212034 CRIMPFOX 6
Ferrules with insulating collar, according to DIN 46228-4	Cross section: 0.14 mm²; Length: 8 mm
	Cross section: 0.25 mm²; Length: 8 mm ... 10 mm
	Cross section: 0.34 mm²; Length: 8 mm ... 10 mm
	Cross section: 0.5 mm²; Length: 8 mm ... 10 mm
	Cross section: 0.75 mm²; Length: 10 mm

Flange specifications

Type of locking	Snap-in locking
Mounting flange	Self-locking flange

Material data - contact

Note	WEEE/RoHS-compliant, free of whiskers according to IEC 60068-2-82/ JEDEC JESD 201

Printed-circuit board connector - FMC 1,5/12-ST-3,5-RF - 1952128

Technical data

Material data - contact

Contact material	Cu alloy
Surface characteristics	hot-dip tin-plated
Metal surface terminal point (top layer)	Tin (4 - 8 µm Sn)
Metal surface contact area (top layer)	Tin (4 - 8 µm Sn)

Material data - housing

Housing color	green (6021)
Insulating material	PA
Insulating material group	I
CTI according to IEC 60112	600
Flammability rating according to UL 94	V0
Glow wire flammability index GWFI according to EN 60695-2-12	850
Glow wire ignition temperature GWIT according to EN 60695-2-13	775
Temperature for the ball pressure test according to EN 60695-10-2	125 °C

Material data – actuating element

Color of the actuating lever	orange (2003)
Insulating material	PBT
CTI according to IEC 60112	600
Flammability rating according to UL 94	V0

Dimensions for the product

Length [l]	22.9 mm
Width [w]	52.1 mm
Height [h]	7.8 mm
Pitch	3.5 mm
Height (without solder pin)	7.8 mm

Packaging information

Type of packaging	packed in cardboard
Pieces per package	50
Denomination packing units	Pcs.

General product information

Type of note	Notes on operation
Note	In accordance with IEC 61984, COMBICON connectors have no switching power (COC). During designated use, they must not be plugged in or disconnected when carrying voltage or under load.

Ambient conditions

Ambient temperature (storage/transport)	-40 °C ... 70 °C
Ambient temperature (assembly)	-5 °C ... 100 °C
Ambient temperature (operation)	-40 °C ... 100 °C (dependent on the derating curve)

Termination and connection method

Printed-circuit board connector - FMC 1,5/12-ST-3,5-RF - 1952128

Technical data

Termination and connection method

Conductor connection test	The stripped-off ends of the largest conductor can be completely inserted in the opening of the terminal point without using excessive force.
Test result	Test passed
Test – repeated connection and release	IEC 60999-1:1999-11
	Test passed
Test for conductor damage and slackening	IEC 60999-1:1999-11
	Test passed

Pull-out test

Pull-out test	IEC 60999-1:1999-11
	Test passed
Conductor cross section / conductor type / tensile force	0.2 mm² / solid / > 10 N
	0.2 mm² / flexible / > 10 N
	1.5 mm² / solid / > 40 N
	1.5 mm² / flexible / > 40 N

Mechanical tests according to standard

Test specification	IEC 61984
Visual inspection	IEC 60512-1-1:2002-02
Dimension check	IEC 60512-1-2:2002-02
Resistance of inscriptions	IEC 60068-2-70:1995-12
Insertion and withdrawal force	IEC 60512-13-2:2006-02
No. of cycles	25
Insertion strength per pos. approx.	5 N
Withdraw strength per pos. approx.	4 N
Polarization and coding	IEC 60512-13-5:2006-02

Air clearances and creepage distances

Clearances and creepage distances	IEC 60664-1:2007-04
Specification	IEC 60664-1:2007-04
Minimum clearance - inhomogeneous field (III/3)	1.5 mm
Minimum clearance - inhomogeneous field (III/2)	1.5 mm
Minimum clearance - inhomogeneous field (II/2)	1.5 mm
Minimum creepage distance value (III/3)	2 mm
Minimum creepage distance value (III/2)	1.5 mm
Minimum creepage distance value (II/2)	1.6 mm

Electrical tests - Function

Specification	IEC 60999-1:1999-11

Temperature cycles

Specification	IEC 60999-1:1999-11
Test current (minimum cross section)	5 A AC

Printed-circuit board connector - FMC 1,5/12-ST-3,5-RF - 1952128

Technical data

Temperature cycles

Test current (maximum cross section)	8 A AC
Temperature cycles	192

Current carrying capacity / derating curves

Caption	Type: FMC 1,5/...-ST-3,5-RF with IFMC 1,5/...-ST-3,5-RN
Specification	IEC 61984:2008-10
Reduction factor	0.8
Note	Representation based on IEC 60512-5-2:2002-02
	For number of positions, see diagram

Mechanical tests (A)

Test specification	IEC 61984
Insertion strength per pos. approx.	5 N
Withdraw strength per pos. approx.	4 N
Polarization when inserted requirement >20 N	Test passed

Durability tests (B)

Specification	IEC 60512-9-1:2010-03
Contact resistance R_1	2.7 mΩ
Insertion/withdrawal cycles	25
Contact resistance R_2	2.8 mΩ
Impulse withstand voltage at sea level	2.95 kV
Power-frequency withstand voltage	1.39 kV
Insulation resistance, neighboring positions	> 4 TΩ

Thermal tests (C)

Specification	IEC 60512-5-1:2002-02
Number of positions	12
Conductor cross section	1.5 mm²
Test current	8 A AC
Upper limiting temperature requirements <100 °C	Test passed

Climatic tests (D)

Specification	ISO 6988:1985-02
Cold stress	-40 °C/2 h
Thermal stress	100 °C/168 h
Corrosive stress	0.2 dm^3 SO_2 on 300 dm^3/40 °C/1 cycle
Impulse withstand voltage at sea level	2.95 kV
Power-frequency withstand voltage	1.39 kV

Environmental and durability tests (E)

Specification	IEC 61984:2008-10
Result, degree of protection, IP code	Finger safety with IP20 test finger

Printed-circuit board connector - FMC 1,5/12-ST-3,5-RF - 1952128

Technical data

Environmental Product Compliance

China RoHS	Environmentally friendly use period: unlimited = EFUP-e
	No hazardous substances above threshold values

Drawings

Diagram

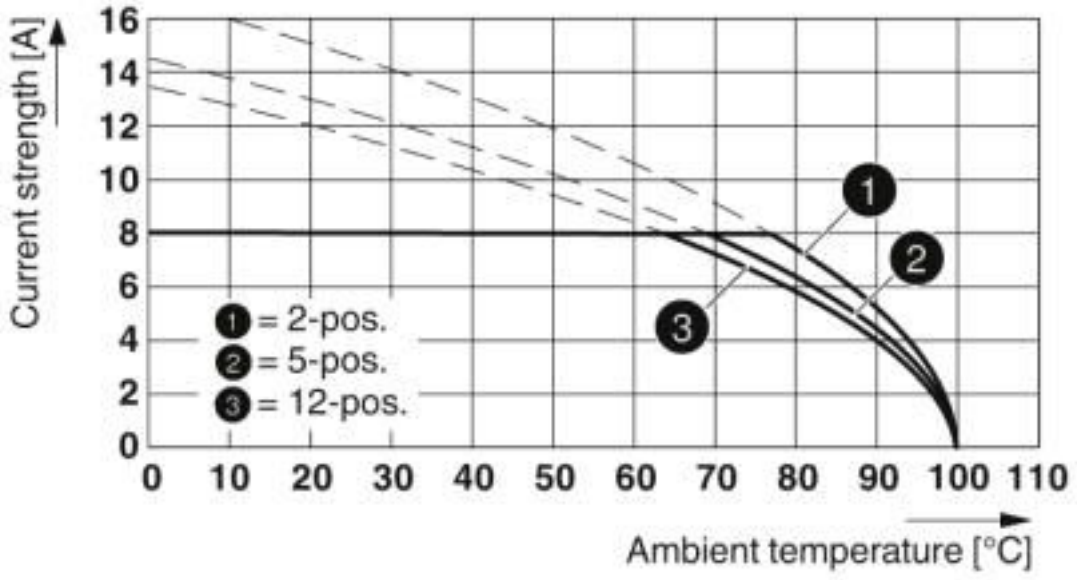

Type: FMC 1,5/...-ST-3,5-RF with IFMC 1,5/...-ST-3,5-RN

Printed-circuit board connector - FMC 1,5/12-ST-3,5-RF - 1952128

Diagram

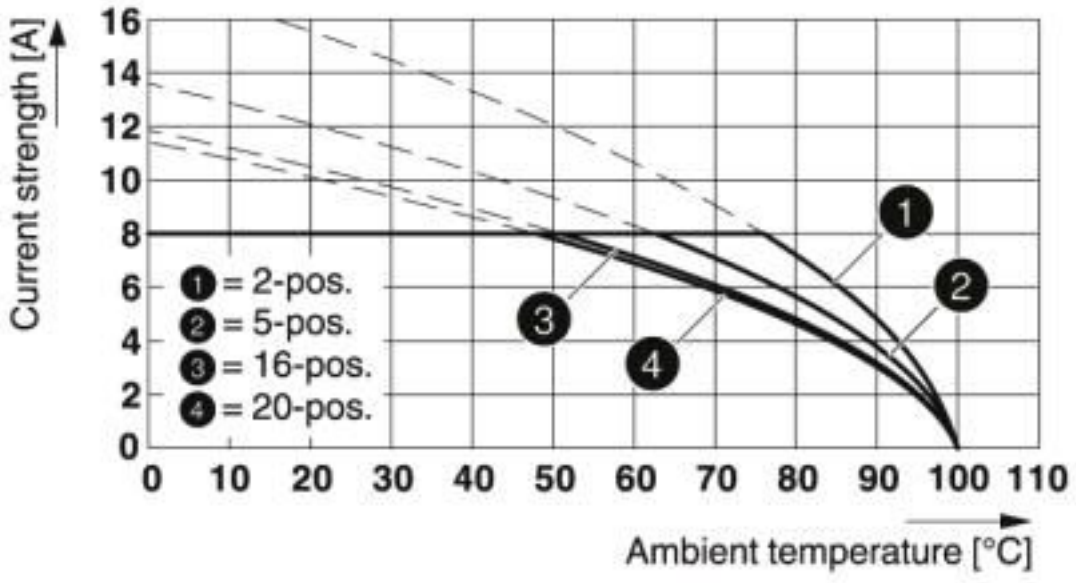

Type: FMC 1,5/...-ST-3,5-RF with MCDN 1,5/...-G1-3,5 RNP..THR

Dimensional drawing

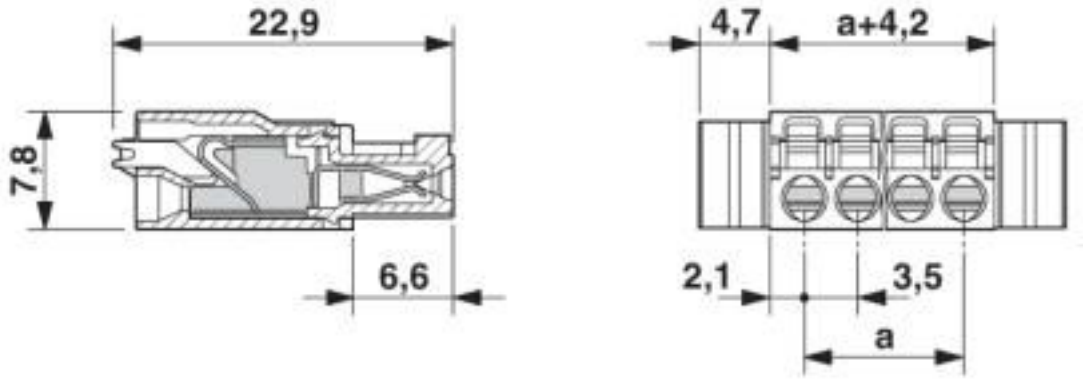

Classifications

eCl@ss

eCl@ss 10.0.1	27440309
eCl@ss 4.0	27260700
eCl@ss 4.1	27260700
eCl@ss 5.0	27260700
eCl@ss 5.1	27260700
eCl@ss 6.0	27260700
eCl@ss 7.0	27440309
eCl@ss 8.0	27440309
eCl@ss 9.0	27440309

Printed-circuit board connector - FMC 1,5/12-ST-3,5-RF - 1952128

Classifications

ETIM

ETIM 3.0	EC001121
ETIM 4.0	EC002638
ETIM 5.0	EC002638
ETIM 6.0	EC002638
ETIM 7.0	EC002638

UNSPSC

UNSPSC 6.01	30211810
UNSPSC 7.0901	39121409
UNSPSC 11	39121409
UNSPSC 12.01	39121409
UNSPSC 13.2	39121409
UNSPSC 18.0	39121409
UNSPSC 19.0	39121409
UNSPSC 20.0	39121409
UNSPSC 21.0	39121409

Approvals

Approvals

Approvals

IECEE CB Scheme / VDE Gutachten mit Fertigungsüberwachung / EAC / cULus Recognized

Ex Approvals

Approval details

IECEE CB Scheme	CB scheme	http://www.iecee.org/	DE1-60987-B1B2

Nominal voltage UN	160 V
Nominal current IN	8 A
mm²/AWG/kcmil	0.2-1.5

Printed-circuit board connector - FMC 1,5/12-ST-3,5-RF - 1952128

Approvals

VDE Gutachten mit Fertigungsüberwachung	VDE	http://www2.vde.com/de/Institut/Online-Service/VDE-gepruefteProdukte/Seiten/Online-Suche.aspx	40011723

Nominal voltage UN	160 V
Nominal current IN	8 A
mm²/AWG/kcmil	0.2-1.5

EAC	EAC	B.01687

cULus Recognized	c UL us	http://database.ul.com/cgi-bin/XYV/template/LISEXT/1FRAME/index.htm E60425-19920306

	B	C
Nominal voltage UN	150 V	50 V
Nominal current IN	8 A	8 A
mm²/AWG/kcmil	24-16	24-16

Accessories

Accessories

Cable end sleeve

Ferrule - A 0,25- 5 - 3202465



Ferrule, length: 5 mm, color: silver

Ferrule - A 0,25- 7 - 3202478



Ferrule, length: 7 mm, color: silver

Printed-circuit board connector - FMC 1,5/12-ST-3,5-RF - 1952128

Accessories

Ferrule - A 0,34- 7 - 3009202



Ferrule, length: 7 mm, color: silver

Ferrule - A 0,5 - 8 - 3202481



Ferrule, length: 8 mm, color: silver

Ferrule - A 0,5 -10 - 3202494



Ferrule, length: 10 mm, color: silver

Ferrule - A 0,75- 8 - 3202504



Ferrule, length: 8 mm, color: silver

Ferrule - A 0,75-10 - 3200234



Ferrule, length: 10 mm, color: silver

Printed-circuit board connector - FMC 1,5/12-ST-3,5-RF - 1952128

Accessories

Ferrule - A 1 - 8 - 3202517



Ferrule, length: 8 mm, color: silver

Ferrule - A 1 -10 - 3200250



Ferrule, length: 10 mm, color: silver

Ferrule - A 1,5 -10 - 3200276



Ferrule, length: 10 mm, color: silver

Ferrule - AI 0,14- 8 GY -1000 - 3203011



Ferrule, sleeve length: 8 mm, length: 12.5 mm, color: gray

Ferrule - AI 0,34- 8 TQ - 3203066



Ferrule, sleeve length: 8 mm, length: 12.5 mm, color: turquoise

Printed-circuit board connector - FMC 1,5/12-ST-3,5-RF - 1952128

Accessories

Ferrule - AI 0,34-10 TQ - 3241129



Ferrule, sleeve length: 10 mm, length: 14.5 mm, color: turquoise

Ferrule - AI 0,5 - 8 WH - 3200014



Ferrule, sleeve length: 8 mm, length: 14 mm, color: white

Ferrule - AI 0,5 -10 WH - 3201275



Ferrule, sleeve length: 10 mm, length: 16 mm, color: white

Ferrule - AI 0,75- 8 GY - 3200519



Ferrule, sleeve length: 8 mm, length: 14 mm, color: gray

Ferrule - AI 0,75-10 GY - 3201288



Ferrule, sleeve length: 10 mm, length: 16 mm, color: gray

Printed-circuit board connector - FMC 1,5/12-ST-3,5-RF - 1952128

Accessories

Ferrule - AI 0,25- 8 YE - 3203037



Ferrule, sleeve length: 8 mm, length: 12.5 mm, color: yellow

Crimping tool

Crimping pliers - CRIMPFOX 6 - 1212034



Crimping pliers, for ferrules without insulating collar according to DIN 46228 Part 1 and ferrules with insulating collar according to DIN 46228 Part 4, 0.25 mm² ... 6.0 mm², lateral entry, trapezoidal crimp

Marker pen

Marker pen - B-STIFT - 1051993



Marker pen, for manual labeling of unprinted Zack strips, smear-proof and waterproof, line thickness 0.5 mm

Screwdriver tools

Screwdriver - SZS 0,4X2,5 VDE - 1205037



Screwdriver, slot-headed, VDE insulated, size: 0.4 x 2.5 x 80 mm, 2-component grip, with non-slip grip

Terminal marking

Marker card - SK U/2,8 WH:UNBEDRUCKT - 0803883



Marker card, Sheet, white, unlabeled, can be labeled with: PLOTMARK, CMS-P1-PLOTTER, Office printing systems, mounting type: adhesive, for terminal block width: 210 mm, lettering field size: 186 x 2.8 mm, Number of individual labels: 3600

Printed-circuit board connector - FMC 1,5/12-ST-3,5-RF - 1952128

Accessories

Marker card - SK U/2,8 WH:UNBEDRUCKT - 0803883



Marker card, Sheet, white, unlabeled, can be labeled with: PLOTMARK, CMS-P1-PLOTTER, Office printing systems, mounting type: adhesive, for terminal block width: 210 mm, lettering field size: 186 x 2.8 mm, Number of individual labels: 3600

Phoenix Contact 2020 © - all rights reserved
http://www.phoenixcontact.com

PHOENIX CONTACT GmbH & Co. KG
Flachsmarktstr. 8
32825 Blomberg
Germany
Tel. +49 5235 300
Fax +49 5235 3 41200
http://www.phoenixcontact.com