Base strip - MSTB 2,5/ 5-GF-5,08 THT - 1927593

Please be informed that the data shown in this PDF Document is generated from our Online Catalog. Please find the complete data in the user's documentation. Our General Terms of Use for Downloads are valid (http://phoenixcontact.com/download)



The illustration shows an 8-position version

Header, Nominal current: 12 A, Rated voltage (III/2): 320 V, Number of positions: 5, Pitch: 5.08 mm, Color: black, Contact surface: Tin, Assembly: SMD/THT/THR, User information and design recommendations for through hole reflow technology can be found under “Downloads”

Key commercial data

Packing unit	1 pc
Minimum order quantity	50 pc
Weight per Piece (excluding packing)	5.32 GRM
Custom tariff number	85366990
Country of origin	Germany

Technical data

Dimensions

Length	12 mm
Pitch	5.08 mm
Dimension a	20.32 mm
Pin dimensions	1 x 1 mm
Hole diameter	1.4 mm

General

Range of articles	MSTB 2,5/..-GF-THT
Insulating material group	IIIa
Rated surge voltage (III/3)	4 kV
Rated surge voltage (III/2)	4 kV
Rated surge voltage (II/2)	4 kV
Rated voltage (III/3)	250 V
Rated voltage (III/2)	320 V

Base strip - MSTB 2,5/ 5-GF-5,08 THT - 1927593

Technical data

General

Rated voltage (II/2)	400 V
Connection in acc. with standard	EN-VDE
Nominal current I_N	12 A
Maximum load current	12 A
Insulating material	PA
Inflammability class according to UL 94	V0
Color	black
Number of positions	5

Classifications

eCl@ss

eCl@ss 4.0	272607xx
eCl@ss 4.1	27260701
eCl@ss 5.0	27260701
eCl@ss 5.1	27260701
eCl@ss 6.0	27260704
eCl@ss 7.0	27440402
eCl@ss 8.0	27440402

ETIM

ETIM 3.0	EC001121
ETIM 4.0	EC002637
ETIM 5.0	EC002637

UNSPSC

UNSPSC 6.01	30211810
UNSPSC 7.0901	39121409
UNSPSC 11	39121409
UNSPSC 12.01	39121409
UNSPSC 13.2	39121409

Drawings

Base strip - MSTB 2,5/ 5-GF-5,08 THT - 1927593

Dimensioned drawing

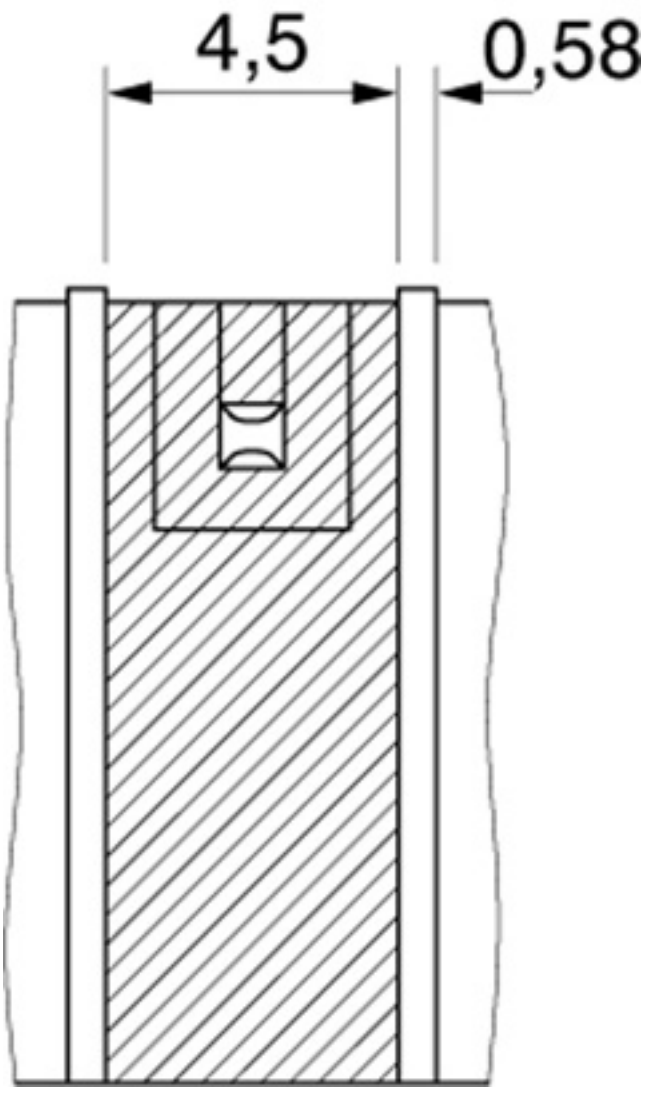

Base strip - MSTB 2,5/ 5-GF-5,08 THT - 1927593

Drilling diagram

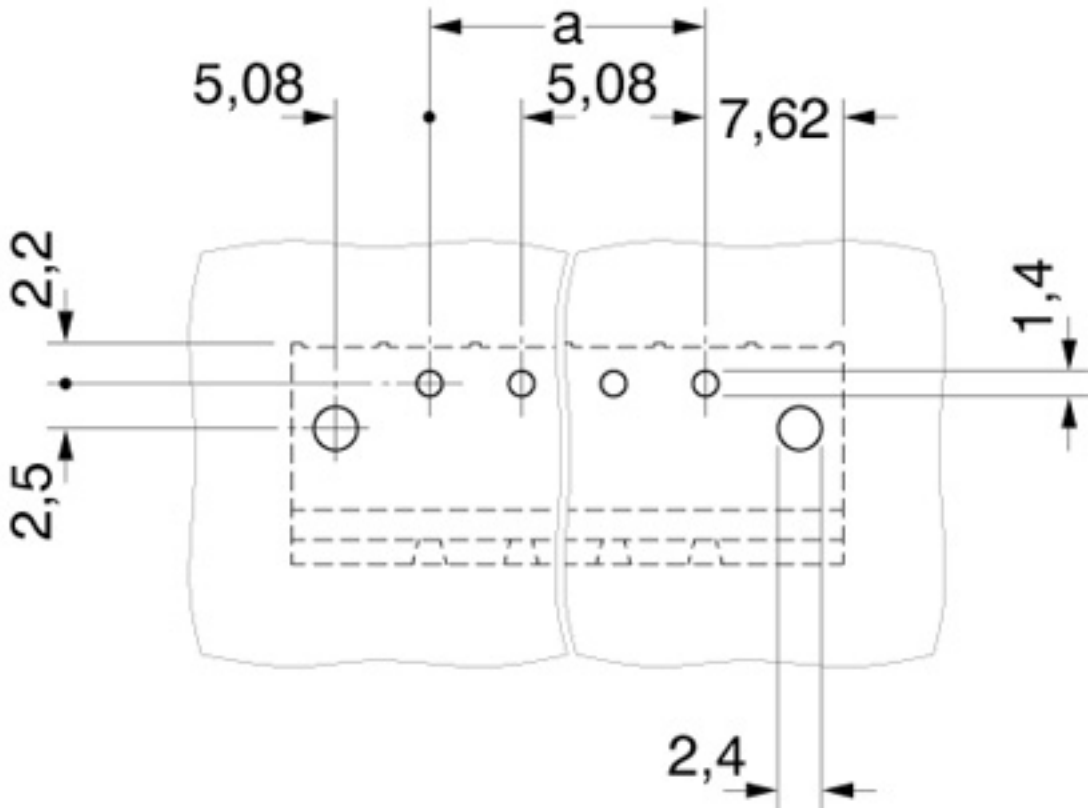

Dimensioned drawing

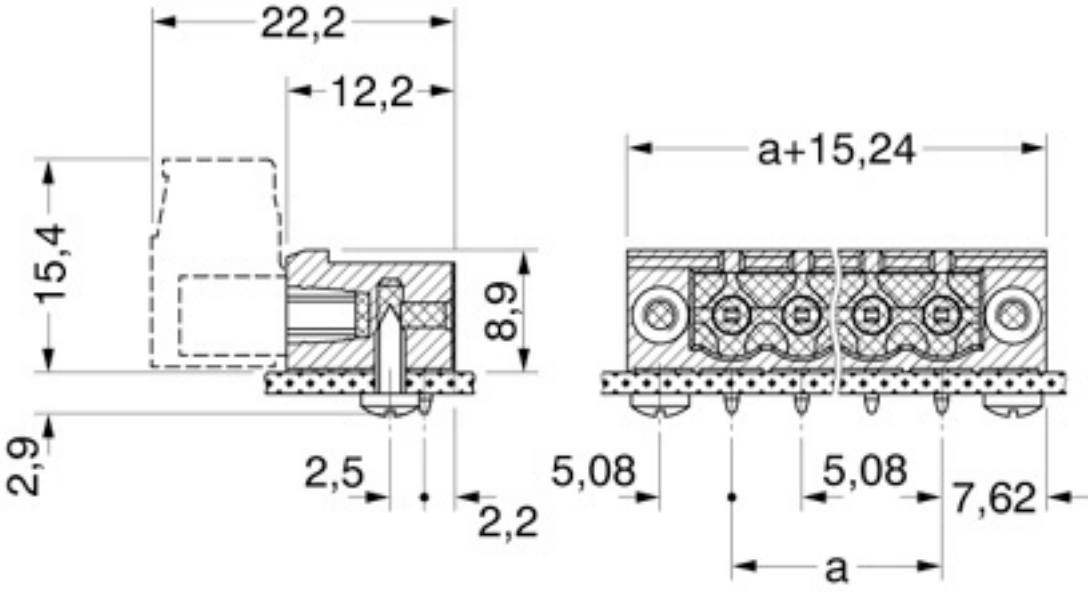

Phoenix Contact 2014 © - all rights reserved
http://www.phoenixcontact.com