This document was generated on 03/16/2010

**PLEASE CHECK WWW.MOLEX.COM FOR LATEST PART INFORMATION**

**Part Number:** 0192020021
**Status:** Active
**Description:** FUNNEL ENTRY BUTT SPLICE TAPED (B-931-DK

**Documents:**
Drawing (PDF) RoHS Certificate of Compliance (PDF)

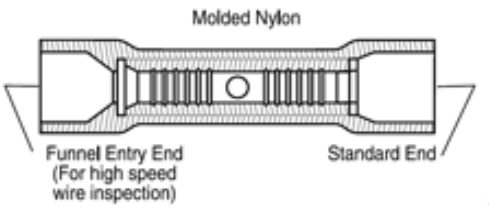


*Series image - Reference only*

## Agency Certification

| | |
|---|---|
| UL | E32244 |

## General

| | |
|---|---|
| Product Family | Splices |
| Series | 19202 |
| Crimp Quality Equipment | Yes |
| Mil-Spec | N/A |
| Product Name | Butt - Funnel Entry |

## Physical

| | |
|---|---|
| Barrel Type | Closed |
| Flammability | 94V-2 |
| Insulation | Nylon (PA) |
| Material - Metal | Copper |
| Packaging Type | Adhesive Tape on Reel |
| Wire Insulation Diameter | 4.70mm (.185") max. Funnel End, 5.05mm (.199") max. |
| Wire Size AWG | 14, 16 |

## Material Info

| | |
|---|---|
| Old Part Number | B-931-DKT |

## Reference - Drawing Numbers

| | |
|---|---|
| Sales Drawing | SD-19202-002 |

**EU RoHS**
**ELV and RoHS Compliant**
**REACH SVHC**
Not Reviewed
**Halogen-Free Status**
**Not Reviewed**

**China RoHS**

**Need more information on product environmental compliance?**

Email productcompliance@molex.com
For a multiple part number RoHS Certificate of Compliance, click here

Please visit the Contact Us section for any non-product compliance questions.

**Search Parts in this Series**
19202Series

**Application Tooling** | **FAQ**
*Tooling specifications and manuals are found by selecting the products below. Crimp Height Specifications are then contained in the Application Tooling Specification document.*
**Global**

| Description | Product # |
|---|---|
| Crimp Dies for MTA-100 Tape Applicator used in 3BF Press, MTA-105 Tape Applicator used in TM-2000™ Press, and ATP-301 Air Crimping Press for Mylar Tape Mounted Terminals | 0192880101 |

This document was generated on 03/16/2010

**PLEASE CHECK WWW.MOLEX.COM FOR LATEST PART INFORMATION**

| MATERIAL NUMBER | ENGINEERING NUMBER | MATERIAL NUMBER ON TAPE | ENGINEERING NUMBER ON TAPE | WIRE SIZE AWG | INSULATION COLOR | TERMINAL ID MIN | MAX. WIRE INSUL. DIA. | | LENTH "L" MAX | "H" ±.010/0.25 |
|---|---|---|---|---|---|---|---|---|---|---|
| | | | | | | | STANDARD END | FUNNEL END | | |
| 192020063 | A-945-DK | 192020007 | A-945-DKT | 18-22 | DK RED | .062/1.57 | .161/4.09 | .147/3.74 | 1.070/27.18 | 1.522/38.67 |
| 192020019 | B-931-DK | 192020021 | B-931-DKT | 14-16 | DK BLUE | .081/2.57 | .199/5.05 | .185/4.70 | 1.070/27.18 | 1.524/38.71 |
| 192020039 | C-946-DK | 192020041 | C-946-DKT | 10-12 | DK YELLOW | .131/3.33 | .276/7.01 | .261/6.63 | 1.150/29.21 | 1.561/39.65 |

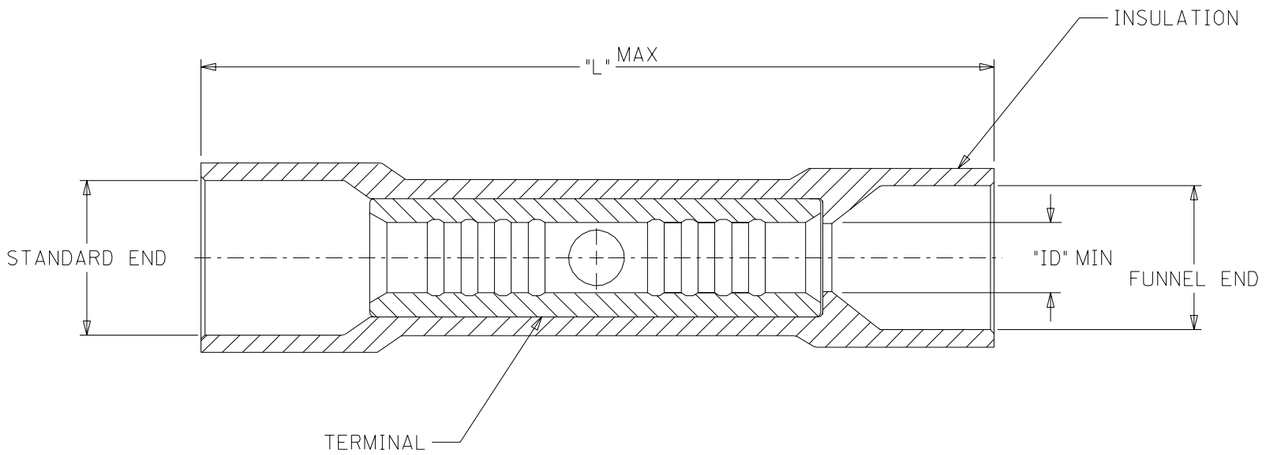


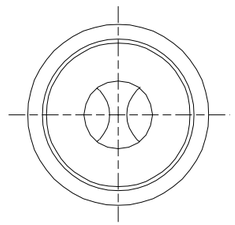

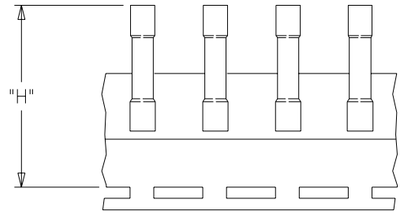

PARTS ON TAPE

NOTES:
1. MATERIAL: COPPER.
2. PLATING: ELECTRON-TIN.
3. INSULATION: 6/6 NYLON

# SALES DRAWING

| REV | DESCRIPTION | |
|---|---|---|
| A | NEW RELEASE | |
| | EC NO. ETC20004-0207 | |
| | DRWN: BRE | 04/04/23 |
| | CH'K: HEB | 04/04/23 |
| | APPR: RWD | 04/04/23 |

QUALITY SYMBOLS
MAJOR ▼ =0
CRITICAL (C) =0

GENERAL TOLERANCES: (UNLESS SPECIFIED)

| | mm | INCH |
|---|---|---|
| 4 PLACES | ±0. | ±. |
| 3 PLACES | ±0. | ±.005 |
| 2 PLACES | ±0.13 | ±.01 |
| 1 PLACE | ±0.25 | ±. |
| ANGULAR: ±1/2° | | |

DRAFT WHERE APPLICABLE MUST REMAIN WITHIN DIMENSIONS

SCALE 4:1
DESIGN UNITS ☐mm ☒INCH
THIRD ANGLE PROJECTION
DIMENSIONS: ☐ mm/INCH ☒ INCH/mm ☐ mm ONLY
SHT | REV
REVISE ON CAD ONLY

DRAWN BY & DATE: BRE 04/04/20
CHECKED BY & DATE: HEB 04/04/20
APPROVED BY & DATE: RWD 04/04/20
CAD FILENAME: SD-19202-002 .DGN

TITLE: FUNNEL ENTRY NYLON BUTTED BUTT SPLICES

MOLEX INCORPORATED

MATERIAL NO.: SEE CHART
DRAWING NO.: SD-19202-002
SHEET NO.: 1 OF 1
SIZE: B

THIS DRAWING CONTAINS INFORMATION THAT IS PROPRIETARY TO MOLEX INCORPORATED AND SHOULD NOT BE USED WITHOUT WRITTEN PERMISSION.