EVERLIGHT ELECTRONICS CO.,LTD.

Technical Data Sheet

Chip LED with Bi-Color(Multi-Color)

19-223/R7BHC-A30/2T



Features

- Package in 8mm tape on 7″ diameter reel.
- Compatible with automatic placement equipment.
- Compatible with infrared and vapor phase reflow solder process.
- Multi-color type.
- Pb-free.
- The product itself will remain within RoHS compliant version.

Descriptions

- The 19-223 SMD Taping is much smaller than lead frame type components, thus enable smaller board size, higher packing density, reduced storage space and finally smaller equipment to be obtained.
- Besides, lightweight makes them ideal for miniature applications. etc.

Applications

- Backlighting in dashboard and switch.
- Telecommunication: indicator and backlighting in telephone and fax.
- Flat backlight for LCD, switch and symbol.
- General use.

Device Selection Guide

Chip			Lens Color
Type	**Material**	**Emitted Color**	
R7	AlGaInP	Dark-Red	Water Clear
BH	InGaN	Blue	

Package Outline Dimensions

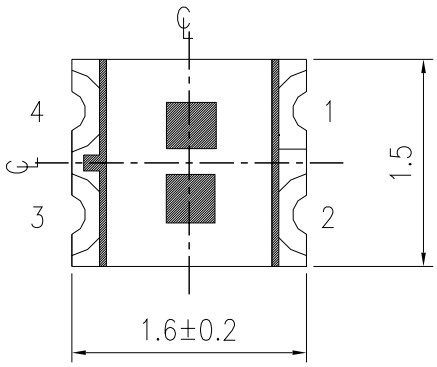

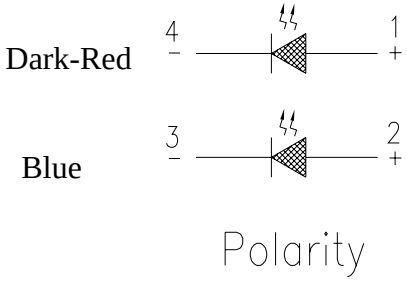

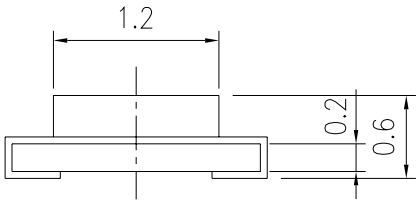



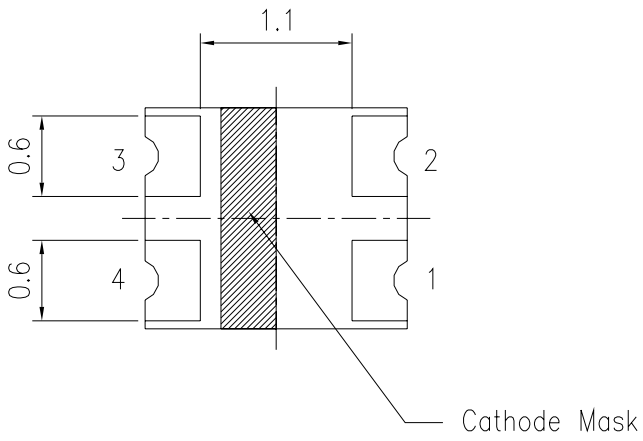

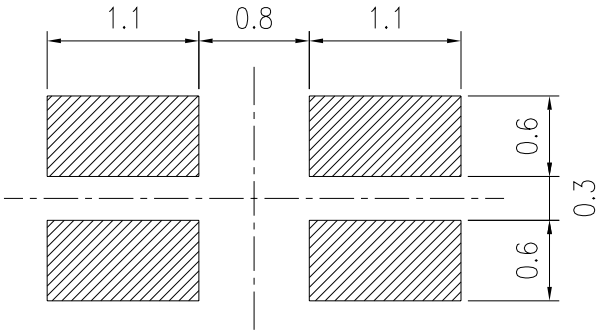

Note: The tolerances unless mentioned is ±0.1mm ,Unit = mm

Absolute Maximum Ratings (Ta=25℃)

Parameter	Symbol	Rating	Unit
Reverse Voltage	V_R	5	V
Forward Current	I_F	25	mA
Peak Forward Current (Duty 1/10 @1KHz)	I_{FP}	R7:60 BH:100	mA
Power Dissipation	Pd	R7:60 BH:110	mW
Electrostatic Discharge(HBM)	ESD	R7:2000 BH:150	V
Operating Temperature	Topr	-40 ~ +85	℃
Storage Temperature	Tstg	-40 ~ +90	℃
Soldering Temperature	Tsol	Reflow Soldering : 260 ℃ for 10 sec. Hand Soldering : 350 ℃ for 3 sec.	

Electro-Optical Characteristics (Ta=25℃)

Parameter	Symbol		Min.	Typ.	Max.	Unit	Condition
Luminous Intensity	Iv	R7	45.0	----	112	mcd	I_F=20mA
		BH	36.0	----	90.0		
Viewing Angle	2θ 1/2		-----	130	-----	deg	
Peak Wavelength	λ p	R7	-----	639	-----	nm	
		BH		468			
Dominant Wavelength	λ d	R7	-----	631	-----	nm	
		BH	-----	470	-----		
Spectrum Radiation Bandwidth	△ λ	R7	-----	20	-----	nm	
		BH		35			
Forward Voltage	V_F	R7	1.7	2.0	2.4	V	
		BH	2.7	3.3	3.7		
Reverse Current	I_R	R7	-----	-----	10	μA	V_R=5V
		BH			50		

Note: **1.Tolerance of Luminous Intensity ±10%**

R7

Bin Range Of Luminous Intensity

Bin	Min	Max	Unit	Condition
P	45.0	72.0	mcd	I_F=20mA
Q	72.0	112		

BH

Bin Range Of Luminous Intensity

Bin	Min	Max	Unit	Condition
1	36.0	57.0	mcd	I_F=20mA
2	57.0	90.0		

Note:

1.Tolerance of Luminous Intensity ±10%

Typical Electro-Optical Characteristics Curves

R7

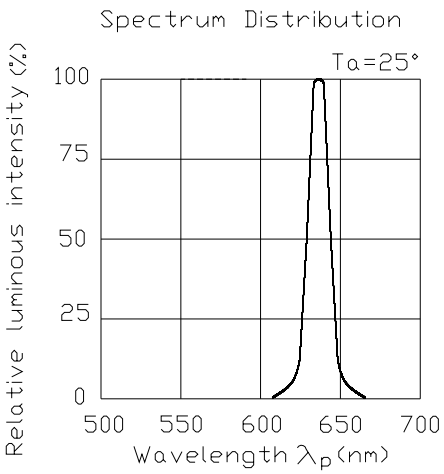

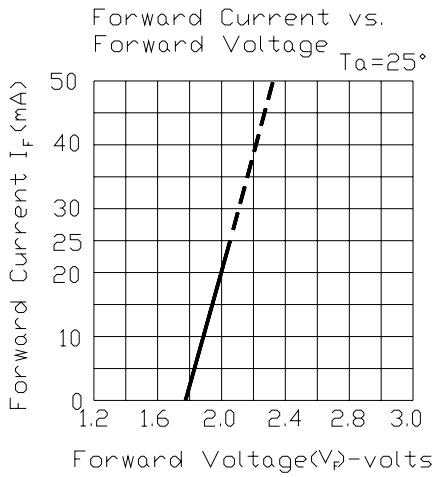

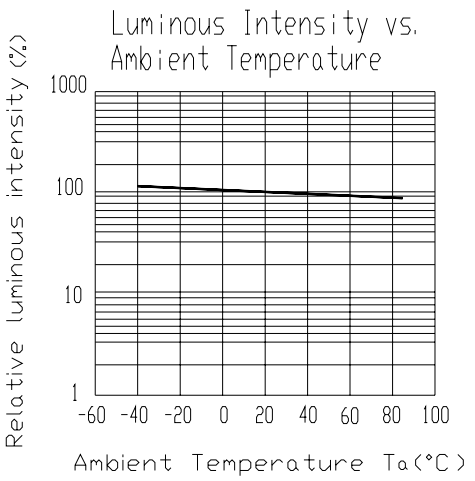

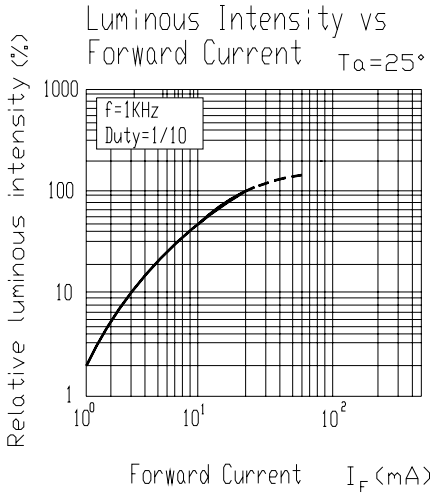

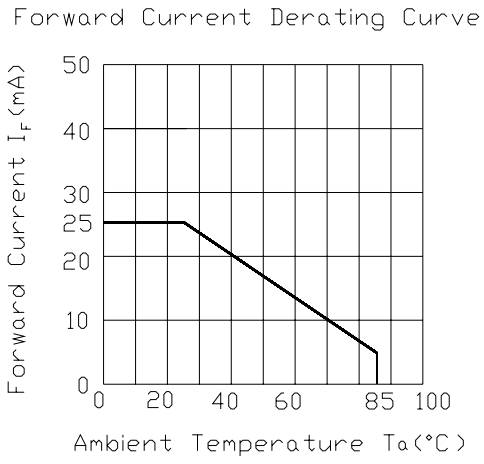

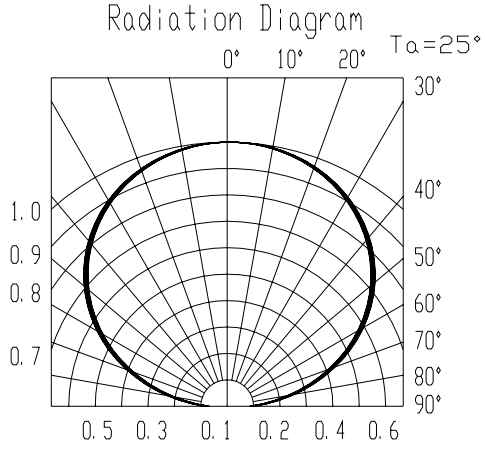

Typical Electro-Optical Characteristics Curves

BH

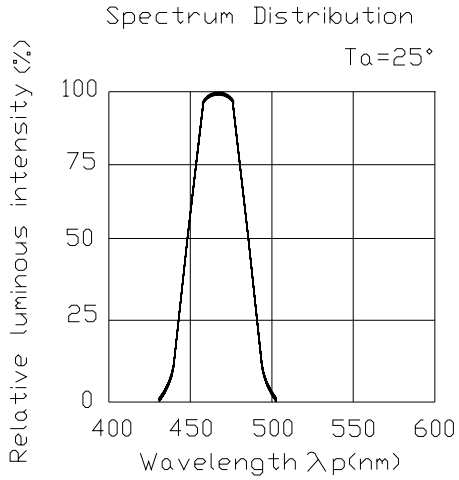

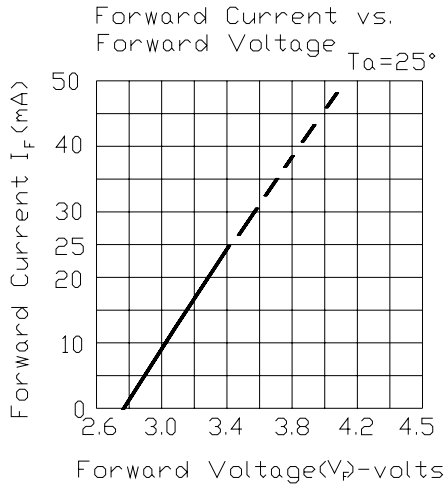

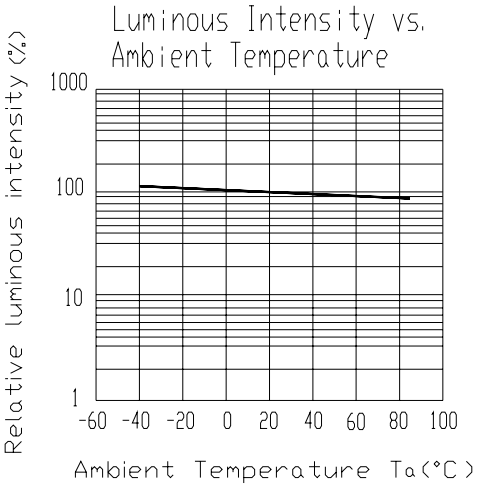

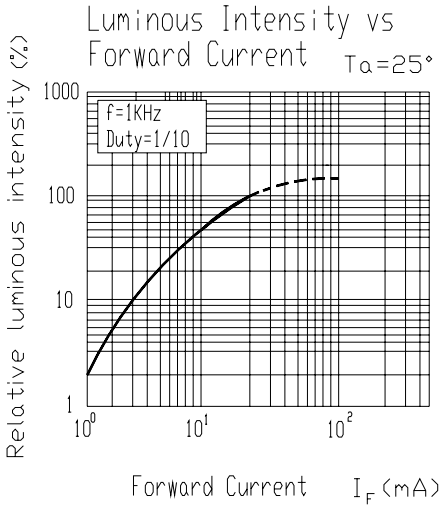

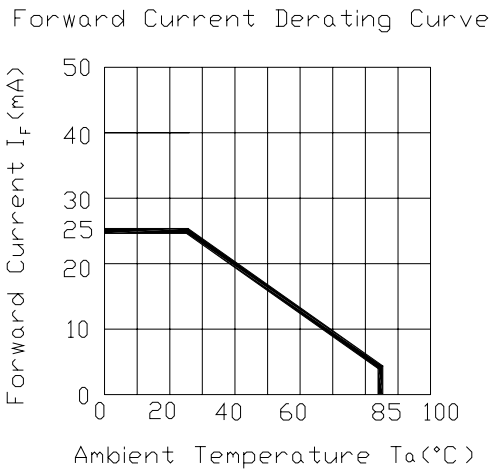

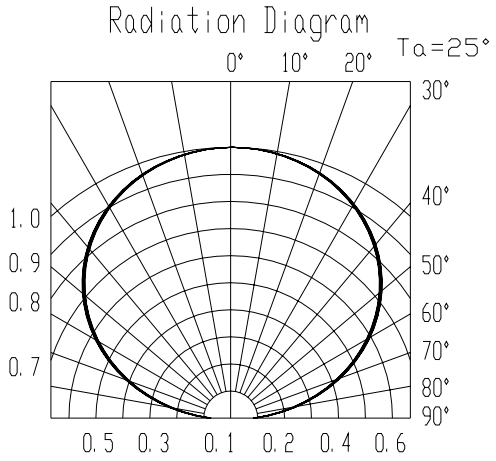

Label explanation

CAT: Luminous Intensity Rank

HUE: Dom. Wavelength Rank

REF: Forward Voltage Rank

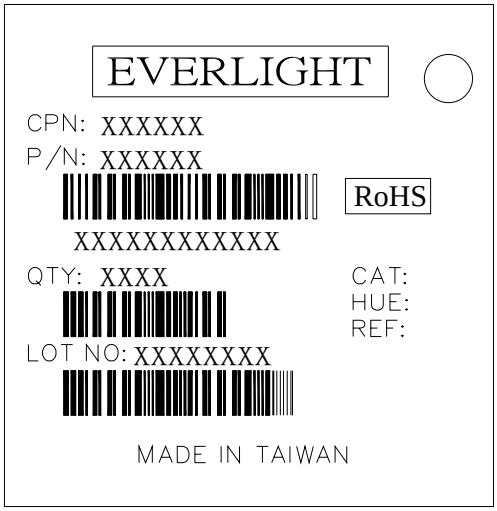

Reel Dimensions

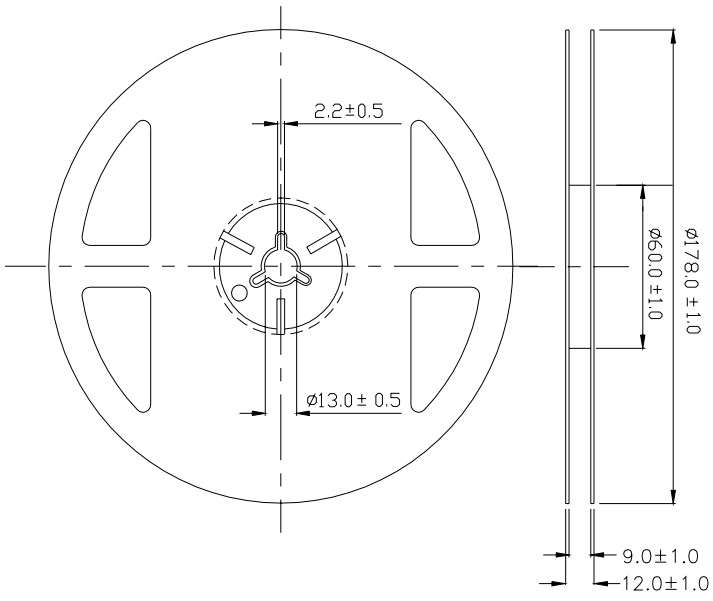

Note: The tolerances unless mentioned is ±0.1mm ,Unit = mm

Carrier Tape Dimensions: Loaded quantity 2000 PCS per reel

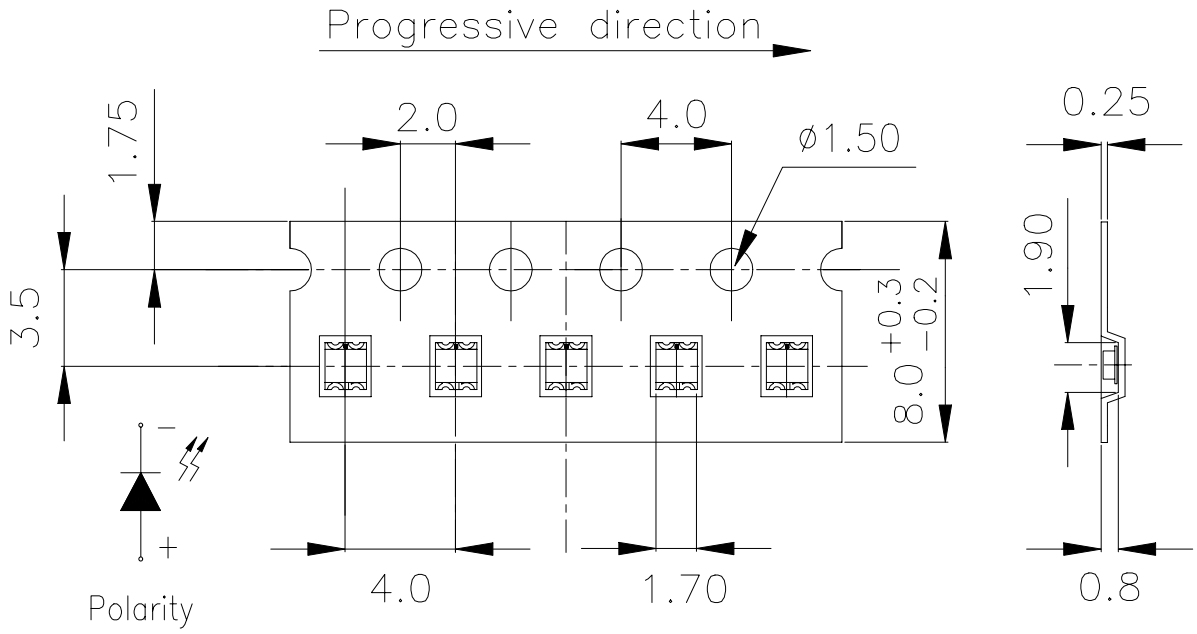

Note: The tolerances unless mentioned is ±0.1mm ,Unit = mm

Moisture Resistant Packaging

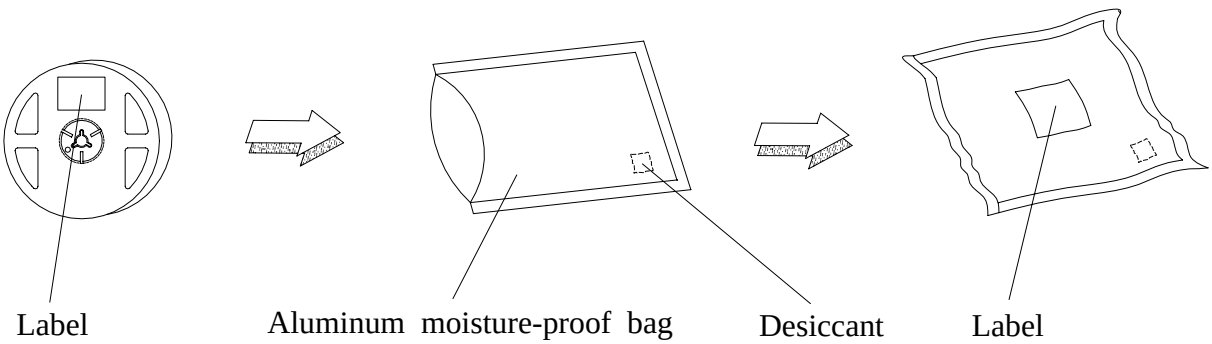

Reliability Test Items And Conditions

The reliability of products shall be satisfied with items listed below.
Confidence level：90%
LTPD：10%

No.	Items	Test Condition	Test Hours/Cycles	Sample Size	Ac/Re
1	Reflow Soldering	Temp. : 260℃±5℃ Min. 5sec.	6 Min.	22 PCS.	0/1
2	Temperature Cycle	H : +100℃ 15min ∫ 5 min L : -40℃ 15min	300 Cycles	22 PCS.	0/1
3	Thermal Shock	H : +100℃ 5min ∫ 10 sec L : -10℃ 5min	300 Cycles	22 PCS.	0/1
4	High Temperature Storage	Temp. : 100℃	1000 Hrs.	22 PCS.	0/1
5	Low Temperature Storage	Temp. : -40℃	1000 Hrs.	22 PCS.	0/1
6	DC Operating Life	I_F = 20 mA	1000 Hrs.	22 PCS.	0/1
7	High Temperature / High Humidity	85℃/ 85%RH	1000 Hrs.	22 PCS.	0/1

Precautions For Use

1. Over-current-proof

Customer must apply resistors for protection , otherwise slight voltage shift will cause big current change (Burn out will happen).

2. Storage

2.1 Do not open moisture proof bag before the products are ready to use.

2.2 Before opening the package, the LEDs should be kept at 30℃ or less and 90%RH or less.

2.3 After opening the package: The LED's floor life is 1 year under 30℃ or less and 60% RH or less. If unused LEDs remain, it should be stored in moisture proof packages.

2.4 If the moisture absorbent material (silica gel) has faded away or the LEDs have exceeded the storage time, baking treatment should be performed using the following conditions.
Baking treatment : 60±5℃ for 24 hours.

3. Soldering Condition

3.1 Pb-free solder temperature profile

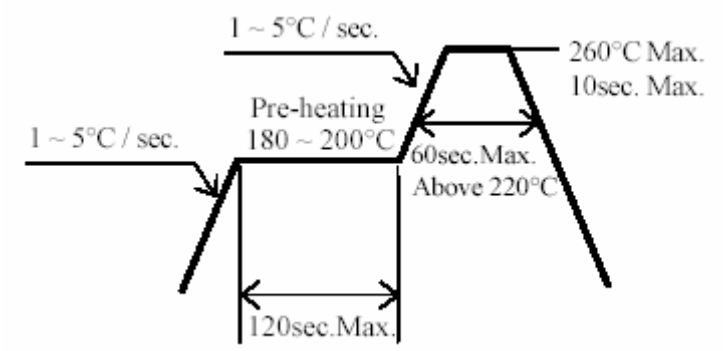

3.2 Reflow soldering should not be done more than two times.

3.3 When soldering, do not put stress on the LEDs during heating.

3.4 After soldering, do not warp the circuit board.

4.Soldering Iron

Each terminal is to go to the tip of soldering iron temperature less than 350℃ for 3 seconds within once in less than the soldering iron capacity 25W. Leave two seconds and more intervals, and do soldering of each terminal. Be careful because the damage of the product is often started at the time of the hand solder.

5.Repairing

Repair should not be done after the LEDs have been soldered. When repairing is unavoidable, a double-head soldering iron should be used (as below figure). It should be confirmed beforehand whether the characteristics of the LEDs will or will not be damaged by repairing.

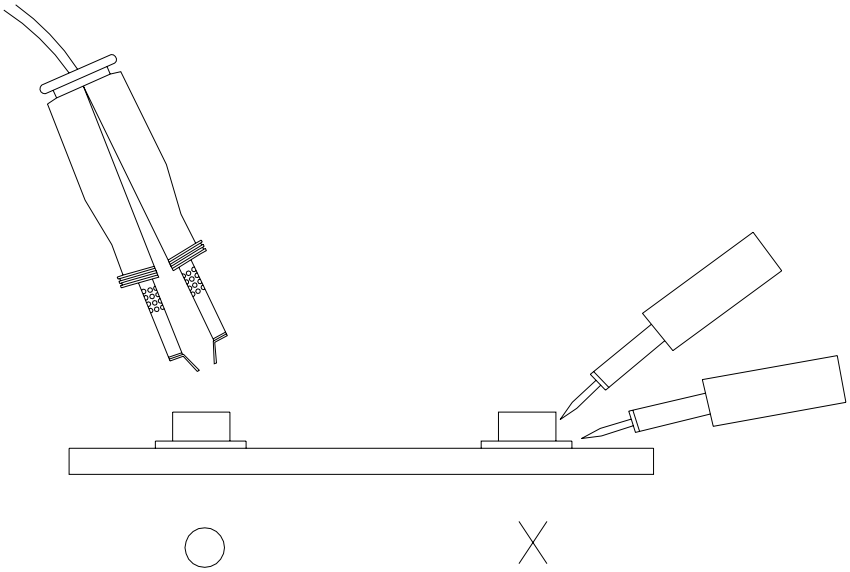

EVERLIGHT ELECTRONICS CO., LTD.
Office: No 25, Lane 76, Sec 3, Chung Yang Rd,
Tucheng, Taipei 236, Taiwan, R.O.C

Tel: 886-2-2267-2000, 2267-9936
Fax: 886-2267-6244, 2267-6189, 2267-6306
http://www.everlight.com