Rack-mounted DCS Signal Conditioners 18-RACK

THERMOCOUPLE CONVERTER

(fast response)

Functions & Features

• Accepting direct input from a thermocouple and providing two standard process signals
• 5-segment linearization
• Burnout protection
• High-accuracy cold junction compensation
• Second channel output available at the front terminals and at the Standard Rack connector
• Fast response type

Typical Applications

• High-accuracy cold junction compensation benefits narrow span measurements
• 0.1 µA burnout sensing enables long distance transmission with minimum offset drifts
• Electric furnace (isolation)
• No burnout type can connect to a single T/C in parallel with a recorder

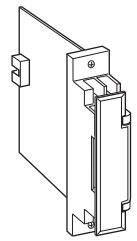

MODEL: 18TK–[1]6[2]–R[3]

ORDERING INFORMATION

• Code number: 18TK-[1]6[2]-R[3]
Specify a code from below for each of [1] through [3].
(e.g. 18TK-266-R/BL)
• Temperature range (e.g. 0 – 800°C)

[1] INPUT THERMOCOUPLE

1: (PR) (Usable Range 0 to 1760°C, 32 to 3200°F)
2: K (CA) (Usable range -270 to +1370°C, -454 to +2498°F)
3: E (CRC) (Usable range -270 to +1000°C, -454 to +1832°F)
4: J (IC) (Usable range -210 to +1200°C, -346 to +2192°F)
5: T (CC) (Usable range -270 to +400°C, -454 to +752°F)
6: B (RH) (Usable range 0 to 1820°C, 32 to 3308°F)
7: R (Usable range -50 to +1760°C, -58 to +3200°F)
8: S (Usable range -50 to +1760°C, -58 to +3200°F)
N: N (Usable range -270 to +1300°C, -454 to +2372°F)
0: Specify

OUTPUT 1

Voltage
6: 1 – 5 V DC (Load resistance 2000 Ω min.)

[2] OUTPUT 2

Current
A: 4 – 20 mA DC (Load resistance 600 Ω max.)
Voltage
6: 1 – 5 V DC (Load resistance 2000 Ω min.)

POWER INPUT

DC Power
R: 24 V DC
(Operational voltage range 24 V ±10 %, ripple 10 %p-p max.)

[3] OPTIONS

Burnout
blank: Upscale burnout
/BL: Downscale burnout
/BN: No burnout

GENERAL SPECIFICATIONS

Construction: Rack-mounted; terminal access via screw terminals on the front and connector on the rear; terminal cover provided
Connection
Input: M3.5 screw terminals (torque 0.8 N·m)
Output 1: Connector
Output 2: M3.5 screw terminals (torque 0.8 N·m) and connector
Power input: Supplied from connector
Screw terminal: Nickel-plated steel
Isolation: Input to output 1 to output 2 to power
Overrange output: Approx. -10 to +120 % at 1 – 5 V
Zero adjustment: -5 to +5 % (front)
Span adjustment: 95 to 105 % (front)
Linearization: Standard
Cold junction compensation: CJC sensor attached to the input terminals

INPUT SPECIFICATIONS

Input resistance: 20 kΩ minimum
Burnout sensing: 0.1 µA
Minimum span: 3 mV
Offset: Max. 1.5 times span
Minimum span (in °C)
(PR): 370°C
K (CA): 75°C
E (CRC): 50°C
J (IC): 60°C
T (CC): 75°C
B (RH): 780°C
R: 360°C
S: 380°C
N: 110°C

Minimum span (in °F)
(PR): 670°F
K (CA): 140°F
E (CRC): 90°F
J (IC): 110°F
T (CC): 140°F
B (RH): 1410°F
R: 650°F
S: 690°F
N: 200°F

For the temperatures that range below 0°C, the transmitter may partially not satisfy the described accuracy. Consult factory.

INSTALLATION

Current consumption: Approx. 35 mA with voltage output
Approx. 65 mA with current output
Operating temperature: -5 to +55°C (23 to 131°F)
Operating humidity: 30 to 90 %RH (non-condensing)
Mounting: Standard Rack 18BXx or 18KBXx
Weight: 150 g (0.33 lb)

PERFORMANCE in percentage of span

Accuracy: ±0.4 % (at over 400°C or 750°F for R, S and PR; over 770°C or 1420°F for B)
Cold junction compensation error
(at 20°C ±10°C or 68°F ±18°F)
K, E, J, T, N: ±0.5°C or ±0.9°F
S, R, PR: ±1°C or ±1.8°F
Temp. coefficient: ±0.015 %/°C (±0.008 %/°F)
(at over 400°C or 750°F for R, S and PR; over 770°C or 1420°F for B)
Response time: Approx. 25 msec. (0 – 90 %)
Burnout response: ≤ 10 sec.
Line voltage effect: ±0.1 % over voltage range
Insulation resistance: ≥ 100 MΩ with 500 V DC
Dielectric strength: 1500 V AC @ 1 minute
(input to output 1 or output 2 or power)
500 V AC @ 1 minute
(output 1 to output 2 to power)
1500 V AC @ 1 minute
(input or output or power to ground)

EXTERNAL DIMENSIONS unit: mm (inch)

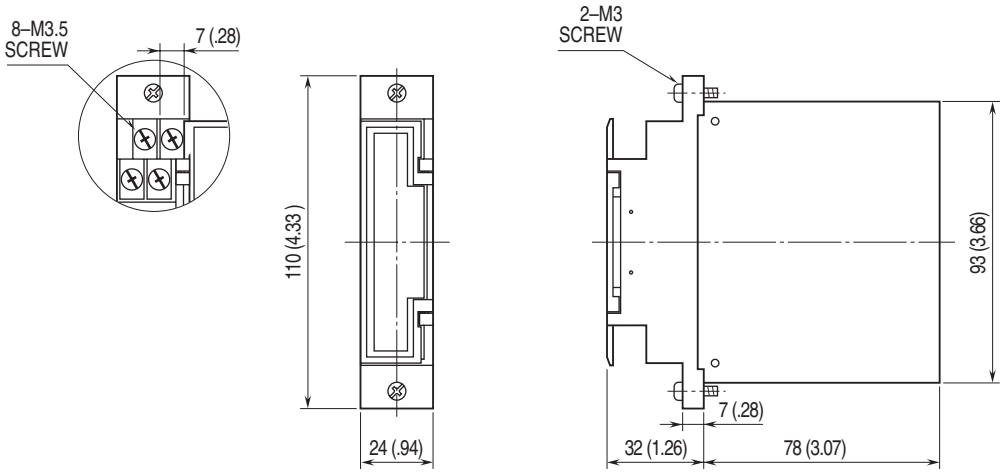

TERMINAL ASSIGNMENTS

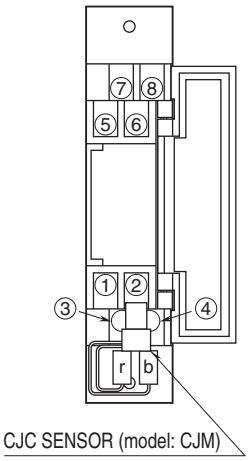

SCHEMATIC CIRCUITRY & CONNECTION DIAGRAM

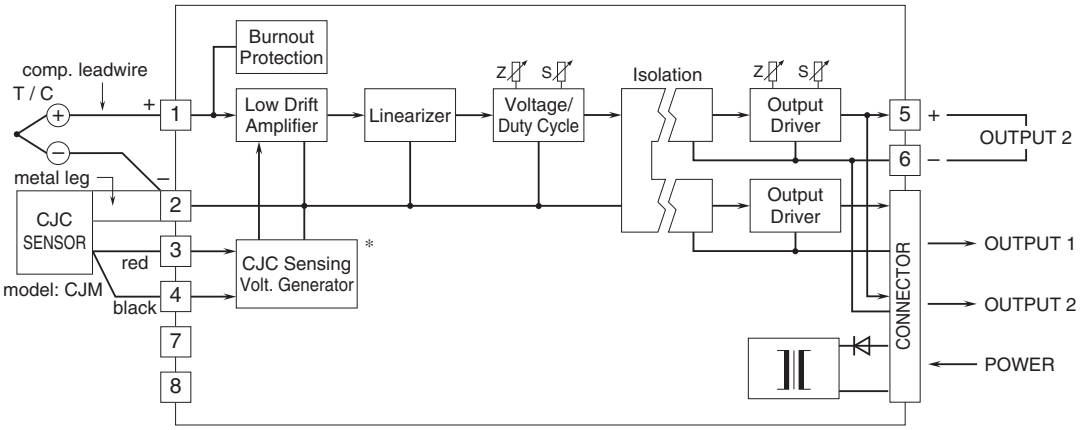

*Deleted with B thermocouple
For OUTPUT 2 with current output, use either of termonals on the front or connector on the rear.

⚠ Specifications are subject to change without notice.