18A, 500V N-CHANNEL POWER MOSFET

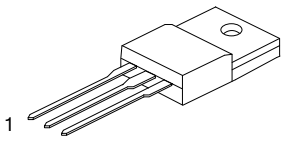

TO-220F1

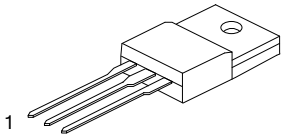

TO-220F2

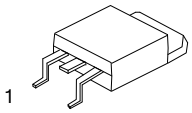

TO-263

■ DESCRIPTION

The UTC **18N50** is an N-channel enhancement mode power MOSFET using UTC's advanced planar stripe and DMOS technology to provide perfect performance.

This technology can withstand high energy pulse in the avalanche and commutation mode. It can provide minimum on-state resistance and high switching speed.

This device is generally applied in active power factor correction and high efficient switched mode power supplies.

■ FEATURES

* $R_{DS(ON)}$=0.32Ω @ V_{GS}=10V
* High switching speed
* Typically 45nC low gate charge
* 100% avalanche tested
* Typically 25pF low C_{RSS}
* Improved dv/dt capability

■ SYMBOL

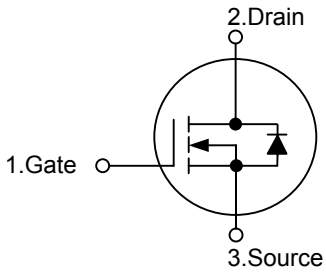

■ ORDERING INFORMATION

Ordering Number		Package	Pin Assignment			Packing
Lead Free	Halogen Free		1	2	3	
18N50L-TF1-T	18N50G-TF1-T	TO-220F1	G	D	S	Tube
18N50L-TF2-T	18N50G-TF2-T	TO-220F2	G	D	S	Tube
18N50L-TQ2-T	18N50G-TQ2-T	TO-263	G	D	S	Tube
18N50L-TQ2-R	18N50G-TQ2-R	TO-263	G	D	S	Tape Reel

Note: Pin Assignment: G: Gate D: Drain S: Source

18N50L - TF1 - T
(1) Packing Type
(2) Package Type
(3) Lead Free

(1) T: Tube, R: Tape Reel
(2) TF1: TO-220F1, TF2: TO-220F2, TQ2: TO-263
(3) G: Halogen Free, L: Lead Free

Copyright © 2012 Unisonic Technologies Co., Ltd

■ ABSOLUTE MAXIMUM RATINGS (unless otherwise specified)

PARAMETER		SYMBOL	RATINGS	UNIT
Drain to Source Voltage		V_{DSS}	500	V
Gate to Source Voltage		V_{GSS}	±30	V
Drain Current	Continuous	I_D	18	A
	Pulsed (Note 2)	I_{DM}	72 (Note 5)	A
Avalanche Energy	Single Pulsed (Note 3)	E_{AS}	945	mJ
	Repetitive (Note 2)	E_{AR}	23.5	mJ
Avalanche Current (Note 2)		I_{AR}	18	A
Peak Diode Recovery dv/dt (Note 4)		dv/dt	4.5	V/ns
Power Dissipation	TO-220F1	P_D	38.5	W
	TO-220F2		40.5	
	TO-263		23.5	
Junction Temperature		T_J	+150	°C
Storage Temperature		T_{STG}	-55 ~ +150	°C

Note: 1. Absolute maximum ratings are those values beyond which the device could be permanently damaged. Absolute maximum ratings are stress ratings only and functional device operation is not implied.
2. Repetitive Rating: Pulse width limited by maximum junction temperature
3. L=5.2mH, I_{AS}=18A, V_{DD}=50V, R_G=25Ω, Starting T_J=25°C
4. I_{SD} ≤18A, di/dt ≤200A/μs, V_{DD} ≤BV_{DSS}, Starting T_J=25°C
5. Drain current limited by maximum junction temperature

■ THERMAL DATA

PARAMETER		SYMBOL	RATINGS	UNIT
Junction to Ambient		θ_{JA}	62.5	°C/W
Junction to Case	TO-220F1	θ_{Jc}	3.3	°C/W
	TO-220F2		3.0	
	TO-263		0.53	

■ ELECTRICAL CHARACTERISTICS (T_C=25°C, unless otherwise specified)

PARAMETER		SYMBOL	TEST CONDITIONS	MIN	TYP	MAX	UNIT
OFF CHARACTERISTICS							
Drain-Source Breakdown Voltage		BV_{DSS}	V_{GS}=0V, I_D=250μA	500			V
Breakdown Voltage Temperature Coefficient		$\Delta BV_{DSS}/\Delta T_J$	I_D=250μA,Referenced to 25°C		0.5		V/°C
Drain-Source Leakage Current		I_{DSS}	V_{DS}=500V, V_{GS}=0V			1	μA
			V_{DS}=400V, T_C=125°C			10	μA
Gate-Source Leakage Current	Forward	I_{GSS}	V_{GS} = 30 V, V_{DS} = 0 V			100	nA
	Reverse		V_{GS} = -30 V, V_{DS} = 0 V			-100	
ON CHARACTERISTICS							
Gate Threshold Voltage		$V_{GS(TH)}$	V_{DS}=V_{GS}, I_D=250μA	2.0		4.0	V
Drain-Source On-State Resistance		$R_{DS(ON)}$	V_{GS}=10V, I_D=9A		0.24	0.32	Ω
Forward Transconductance		g_{FS}	V_{DS}=40V, I_D=9A (Note 1)		25		S
DYNAMIC PARAMETERS							
Input Capacitance		C_{ISS}	V_{DS}=25V,V_{GS}=0V,f=1.0MHz		2200	2860	pF
Output Capacitance		C_{OSS}			330	430	pF
Reverse Transfer Capacitance		C_{RSS}			25	40	pF
SWITCHING PARAMETERS							
Total Gate Charge		Q_G	V_{DS}=400V, V_{GS}=10V, I_D=18A (Note 1,2)		45	60	nC
Gate-Source Charge		Q_{GS}			12.5		nC
Gate-Drain Charge		Q_{GD}			19		nC
Turn-ON Delay Time		$t_{D(ON)}$	V_{DD}=250V, I_D=18A, R_G=25Ω (Note 1,2)		55	120	ns
Turn-ON Rise Time		t_R			165	340	ns
Turn-OFF Delay Time		$t_{D(OFF)}$			95	200	ns
Turn-OFF Fall Time		t_F			90	190	ns
SOURCE- DRAIN DIODE RATINGS AND CHARACTERISTICS							
Maximum Body-Diode Continuous Current		I_S				18	A
Maximum Body-Diode Pulsed Current		I_{SM}				72	A
Drain-Source Diode Forward Voltage		V_{SD}	I_S =18A, V_{GS}=0V			1.4	V
Body Diode Reverse Recovery Time		t_{rr}	V_{GS}=0V, I_S=18A, dI_F/dt=100A/μs (Note 1)		500		ns
Body Diode Reverse Recovery Charge		Q_{RR}			5.4		μC

Note: 1. Pulse Test : Pulse width≤300μs, Duty cycle≤2%
2. Essentially independent of operating temperature

■ TEST CIRCUITS AND WAVEFORMS

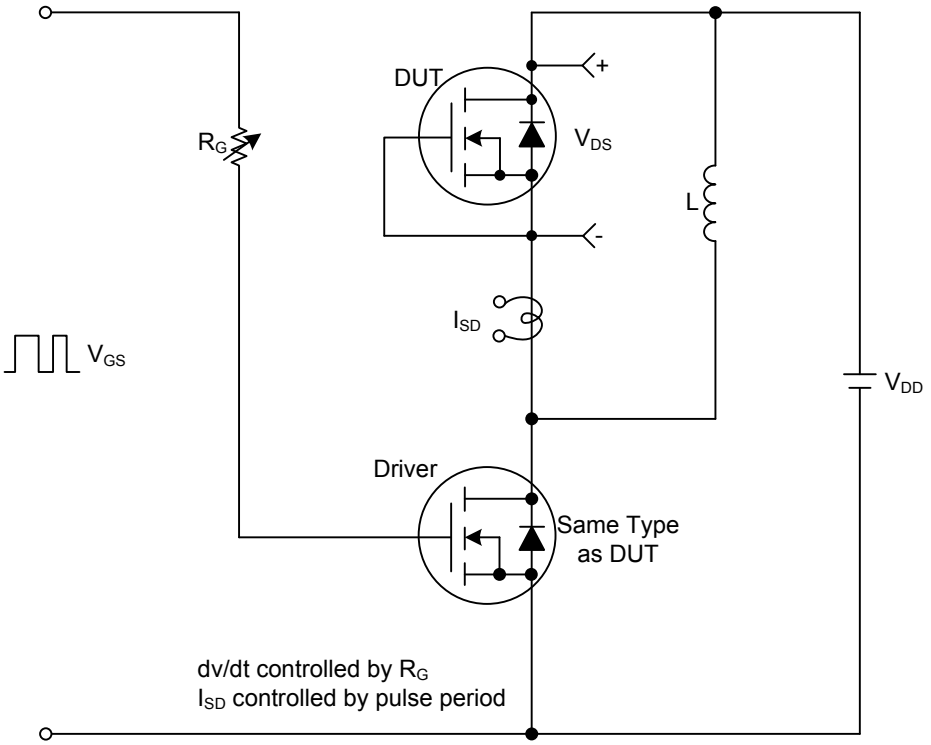

Peak Diode Recovery dv/dt Test Circuit & Waveforms

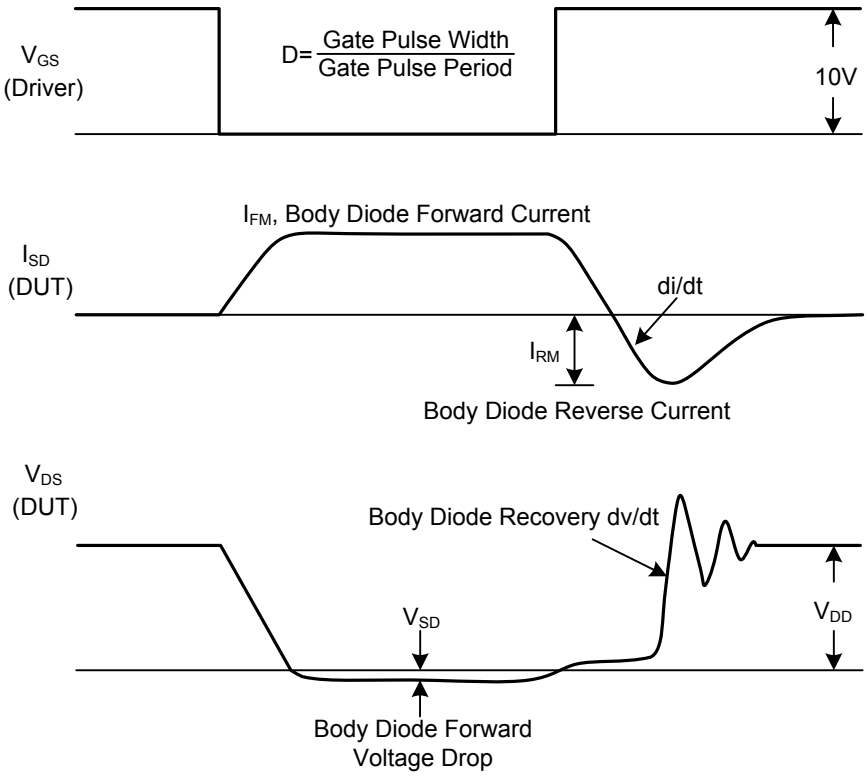

■ TEST CIRCUITS AND WAVEFORMS(Cont.)

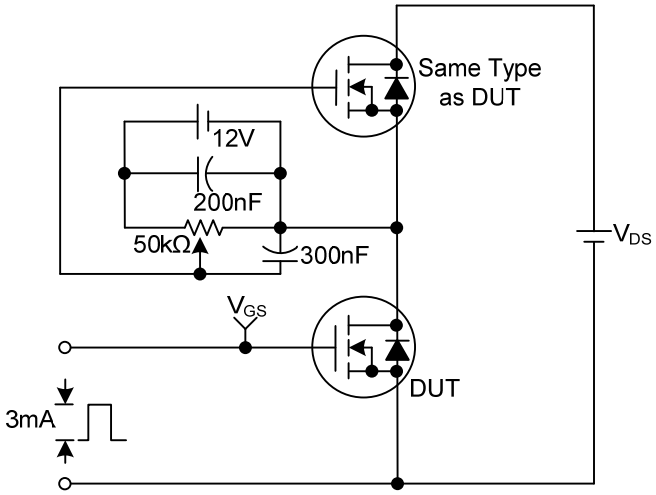

Gate Charge Test Circuit

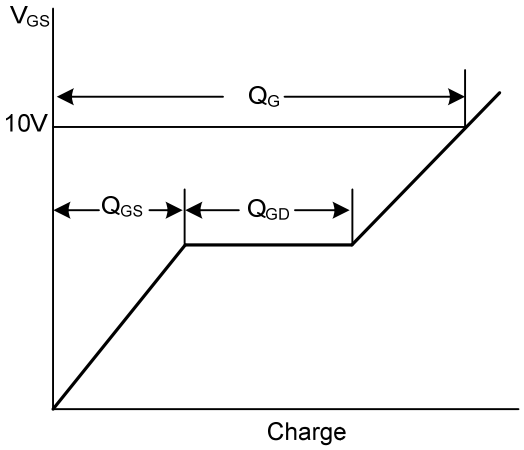

Gate Charge Waveforms

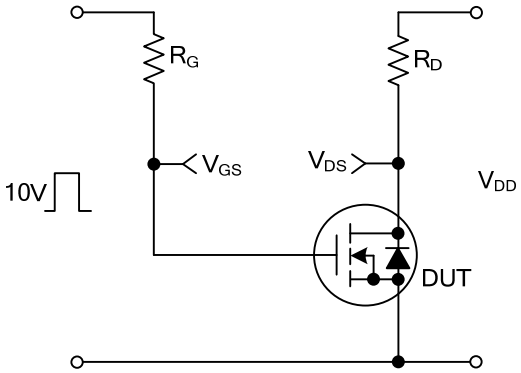

Resistive Switching Test Circuit

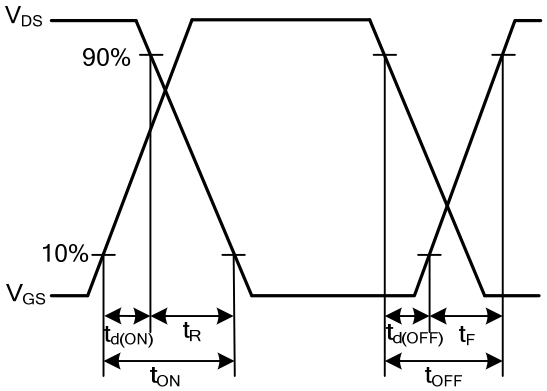

Resistive Switching Waveforms

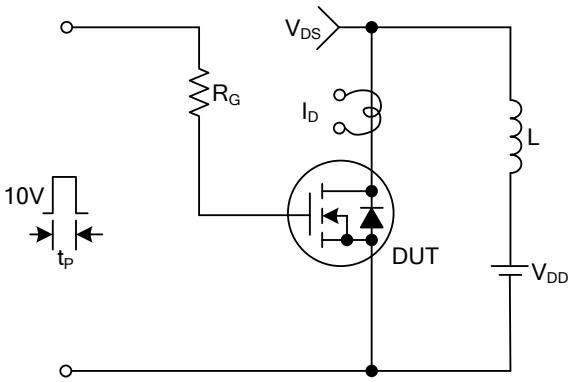

Unclamped Inductive Switching Test Circuit

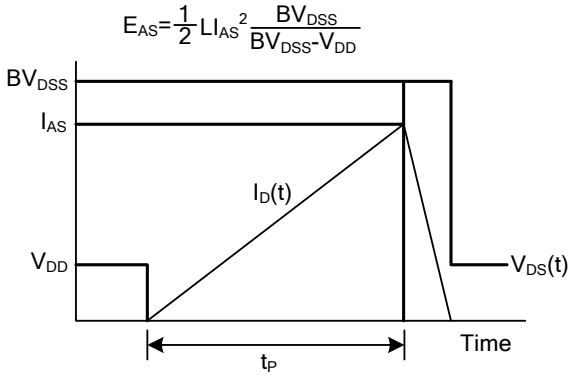

Unclamped Inductive Switching Waveforms

■ TYPICAL CHARACTERISTICS

Drain Current vs. Drain-Source Breakdown Voltage

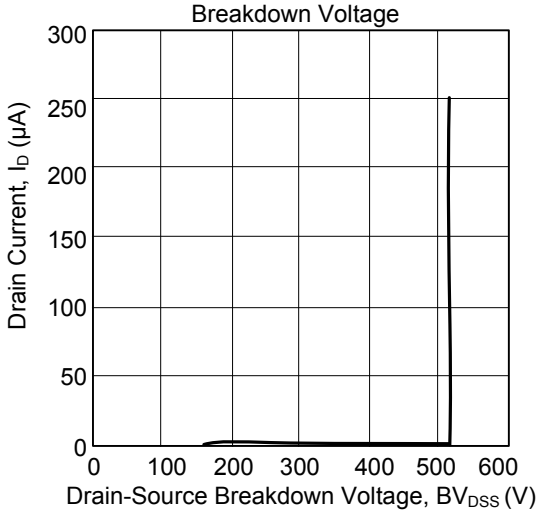

Drain Current vs. Gate Threshold Voltage

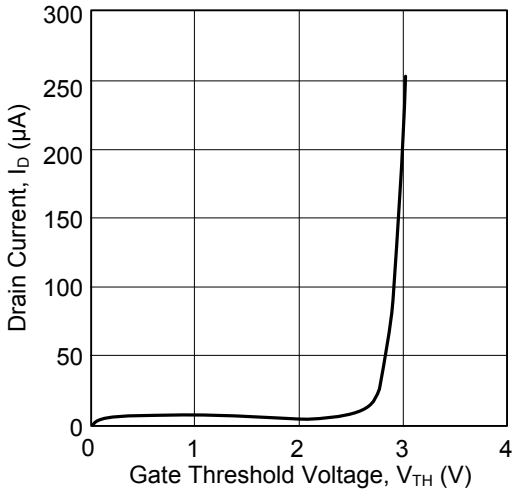

Drain-Source On-State Resistance Characteristics

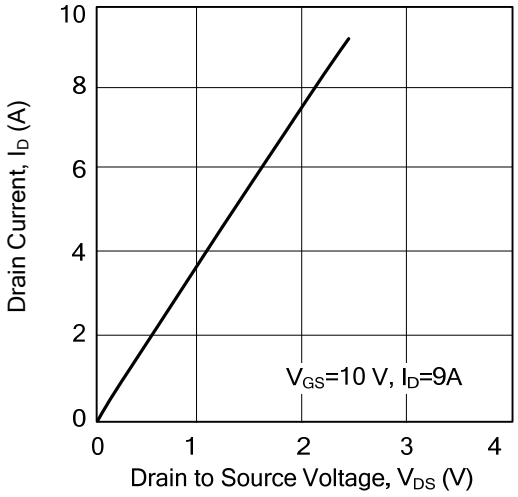

Drain Current vs. Source to Drain Voltage

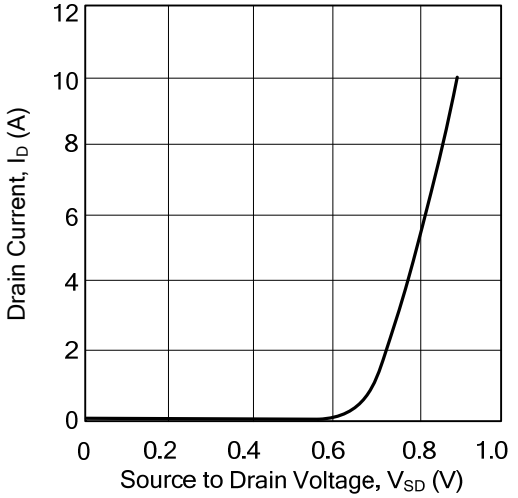

UTC assumes no responsibility for equipment failures that result from using products at values that exceed, even momentarily, rated values (such as maximum ratings, operating condition ranges, or other parameters) listed in products specifications of any and all UTC products described or contained herein. UTC products are not designed for use in life support appliances, devices or systems where malfunction of these products can be reasonably expected to result in personal injury. Reproduction in whole or in part is prohibited without the prior written consent of the copyright owner. The information presented in this document does not form part of any quotation or contract, is believed to be accurate and reliable and may be changed without notice.