

PIC18F23K20/24K20/25K20/26K20/ 43K20/44K20/45K20/46K20 Data Sheet

28/40/44-Pin Flash Microcontrollers with nanoWatt XLP Technology

© 2010 Microchip Technology Inc.

Note the following details of the code protection feature on Microchip devices:

- Microchip products meet the specification contained in their particular Microchip Data Sheet.
- Microchip believes that its family of products is one of the most secure families of its kind on the market today, when used in the intended manner and under normal conditions.
- There are dishonest and possibly illegal methods used to breach the code protection feature. All of these methods, to our knowledge, require using the Microchip products in a manner outside the operating specifications contained in Microchip's Data Sheets. Most likely, the person doing so is engaged in theft of intellectual property.
- Microchip is willing to work with the customer who is concerned about the integrity of their code.
- Neither Microchip nor any other semiconductor manufacturer can guarantee the security of their code. Code protection does not mean that we are guaranteeing the product as "unbreakable."

Code protection is constantly evolving. We at Microchip are committed to continuously improving the code protection features of our products. Attempts to break Microchip's code protection feature may be a violation of the Digital Millennium Copyright Act. If such acts allow unauthorized access to your software or other copyrighted work, you may have a right to sue for relief under that Act.

Information contained in this publication regarding device applications and the like is provided only for your convenience and may be superseded by updates. It is your responsibility to ensure that your application meets with your specifications. MICROCHIP MAKES NO REPRESENTATIONS OR WARRANTIES OF ANY KIND WHETHER EXPRESS OR IMPLIED, WRITTEN OR ORAL, STATUTORY OR OTHERWISE, RELATED TO THE INFORMATION, INCLUDING BUT NOT LIMITED TO ITS CONDITION, QUALITY, PERFORMANCE, MERCHANTABILITY OR FITNESS FOR PURPOSE**.** Microchip disclaims all liability arising from this information and its use. Use of Microchip devices in life support and/or safety applications is entirely at the buyer's risk, and the buyer agrees to defend, indemnify and hold harmless Microchip from any and all damages, claims, suits, or expenses resulting from such use. No licenses are conveyed, implicitly or otherwise, under any Microchip intellectual property rights.

Trademarks

The Microchip name and logo, the Microchip logo, dsPIC, KEELOQ, KEELOQ logo, MPLAB, PIC, PICmicro, PICSTART, rfPIC and UNI/O are registered trademarks of Microchip Technology Incorporated in the U.S.A. and other countries.

FilterLab, Hampshire, HI-TECH C, Linear Active Thermistor, MXDEV, MXLAB, SEEVAL and The Embedded Control Solutions Company are registered trademarks of Microchip Technology Incorporated in the U.S.A.

Analog-for-the-Digital Age, Application Maestro, CodeGuard, dsPICDEM, dsPICDEM.net, dsPICworks, dsSPEAK, ECAN, ECONOMONITOR, FanSense, HI-TIDE, In-Circuit Serial Programming, ICSP, Mindi, MiWi, MPASM, MPLAB Certified logo, MPLIB, MPLINK, mTouch, Octopus, Omniscient Code Generation, PICC, PICC-18, PICDEM, PICDEM.net, PICkit, PICtail, PIC^{32} logo, REAL ICE, rfLAB, Select Mode, Total Endurance, TSHARC, UniWinDriver, WiperLock and ZENA are trademarks of Microchip Technology Incorporated in the U.S.A. and other countries.

SQTP is a service mark of Microchip Technology Incorporated in the U.S.A.

All other trademarks mentioned herein are property of their respective companies.

© 2010, Microchip Technology Incorporated, Printed in the U.S.A., All Rights Reserved.

Printed on recycled paper.

QUALITY MANAGEMENT SYSTEM
CERTIFIED BY DNV
ISO/TS 16949:2002

Microchip received ISO/TS-16949:2002 certification for its worldwide headquarters, design and wafer fabrication facilities in Chandler and Tempe, Arizona; Gresham, Oregon and design centers in California and India. The Company's quality system processes and procedures are for its PIC® MCUs and dsPIC® DSCs, KEELOQ® code hopping devices, Serial EEPROMs, microperipherals, nonvolatile memory and analog products. In addition, Microchip's quality system for the design and manufacture of development systems is ISO 9001:2000 certified.

© 2010 Microchip Technology Inc.

28/40/44-Pin Flash Microcontrollers with nanoWatt XLP Technology

High-Performance RISC CPU:

- C Compiler Optimized Architecture:
  - Optional extended instruction set designed to optimize re-entrant code
- Up to 1024 bytes Data EEPROM
- Up to 64 Kbytes Linear Program Memory Addressing
- Up to 3936 bytes Linear Data Memory Addressing
- Up to 16 MIPS Operation
- 16-bit Wide Instructions, 8-bit Wide Data Path
- Priority Levels for Interrupts
- 31-Level, Software Accessible Hardware Stack
- 8 x 8 Single-Cycle Hardware Multiplier

Flexible Oscillator Structure:

- Precision 16 MHz Internal Oscillator Block:
  - Factory calibrated to ± 1%
  - Software selectable frequencies range of 31 kHz to 16 MHz
  - 64 MHz performance available using PLL – no external components required
- Four Crystal modes up to 64 MHz
- Two External Clock modes up to 64 MHz
- 4X Phase Lock Loop (PLL)
- Secondary Oscillator using Timer1 @ 32 kHz
- Fail-Safe Clock Monitor:
  - Allows for safe shutdown if peripheral clock stops
  - Two-Speed Oscillator Start-up

Special Microcontroller Features:

- Operating Voltage Range: 1.8V to 3.6V
- Self-Programmable under Software Control
- Programmable 16-Level High/Low-Voltage Detection (HLVD) module:
  - Interrupt on High/Low-Voltage Detection
- Programmable Brown-out Reset (BOR):
  - With software enable option
- Extended Watchdog Timer (WDT):
  - Programmable period from 4 ms to 131s
- Single-Supply 3V In-Circuit Serial Programming™ (ICSP™) via Two Pins
- In-Circuit Debug (ICD) via Two Pins

Extreme Low-Power Management with nanoWatt XLP:

- Sleep mode: < 100 nA @ 1.8V
- Watchdog Timer: < 800 nA @ 1.8V
- Timer1 Oscillator: < 800 nA @ 32 kHz and 1.8V

Analog Features:

- Analog-to-Digital Converter (ADC) module:
  - 10-bit resolution, 13 External Channels
  - Auto-acquisition capability
  - Conversion available during Sleep
  - 1.2V Fixed Voltage Reference (FVR) channel
  - Independent input multiplexing
- Analog Comparator module:
  - Two rail-to-rail analog comparators
  - Independent input multiplexing
- Voltage Reference (CV_{REF}) module
  - Programmable (% V_{DD}), 16 steps
  - Two 16-level voltage ranges using V_{REF} pins

Peripheral Highlights:

- Up to 35 I/O Pins plus 1 Input-only Pin:
  - High-Current Sink/Source 25 mA/25 mA
  - Three programmable external interrupts
  - Four programmable interrupt-on-change
  - Eight programmable weak pull-ups
  - Programmable slew rate
- Capture/Compare/PWM (CCP) module
- Enhanced CCP (ECCP) module:
  - One, two or four PWM outputs
  - Selectable polarity
  - Programmable dead time
  - Auto-Shutdown and Auto-Restart
- Master Synchronous Serial Port (MSSP) module
  - 3-wire SPI (supports all 4 modes)
  - I^2C™ Master and Slave modes with address mask
- Enhanced Universal Synchronous Asynchronous Receiver Transmitter (EUSART) module:
  - Supports RS-485, RS-232 and LIN
  - RS-232 operation using internal oscillator
  - Auto-Wake-up on Break
  - Auto-Baud Detect

© 2010 Microchip Technology Inc.

Device	Program Memory		Data Memory		I/O(1)	10-bit A/D (ch)(2)	CCP/ ECCP (PWM)	MSSP		EUSART	Comp.	Timers 8/16-bit
	Flash (bytes)	# Single-Word Instructions	SRAM (bytes)	EEPROM (bytes)				SPI	Master I^2C™			
PIC18F23K20	8K	4096	512	256	25	11	1/1	Y	Y	1	2	1/3
PIC18F24K20	16K	8192	768	256	25	11	1/1	Y	Y	1	2	1/3
PIC18F25K20	32K	16384	1536	256	25	11	1/1	Y	Y	1	2	1/3
PIC18F26K20	64k	32768	3936	1024	25	11	1/1	Y	Y	1	2	1/3
PIC18F43K20	8K	4096	512	256	36	14	1/1	Y	Y	1	2	1/3
PIC18F44K20	16K	8192	768	256	36	14	1/1	Y	Y	1	2	1/3
PIC18F45K20	32K	16384	1536	256	36	14	1/1	Y	Y	1	2	1/3
PIC18F46K20	64k	32768	3936	1024	36	14	1/1	Y	Y	1	2	1/3

Note 1: One pin is input only.

2: Channel count includes internal fixed voltage reference channel.

© 2010 Microchip Technology Inc.

Pin Diagrams

28-pin PDIP, SOIC, SSOP

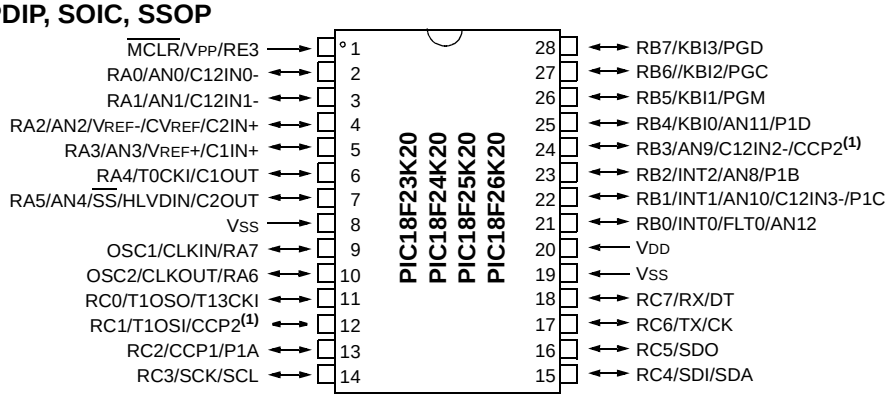

40-pin PDIP

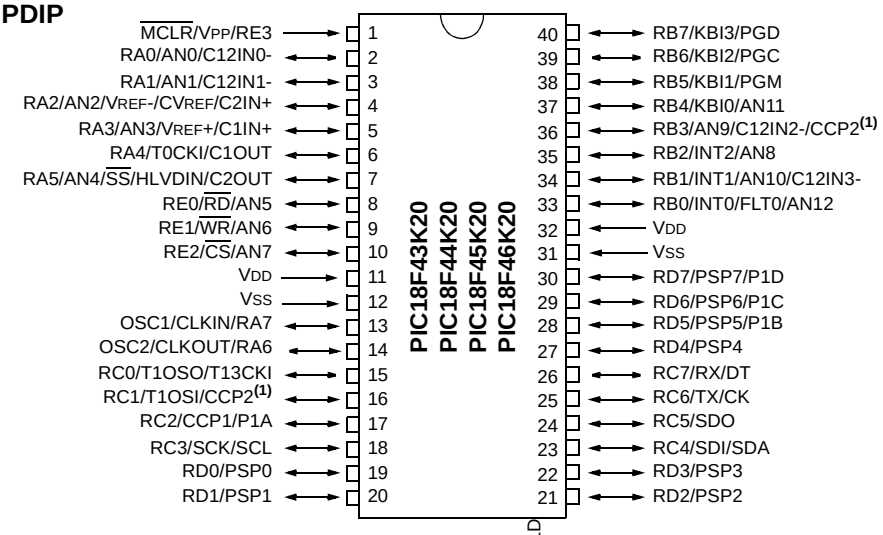

28-pin QFN/UQFN(2)

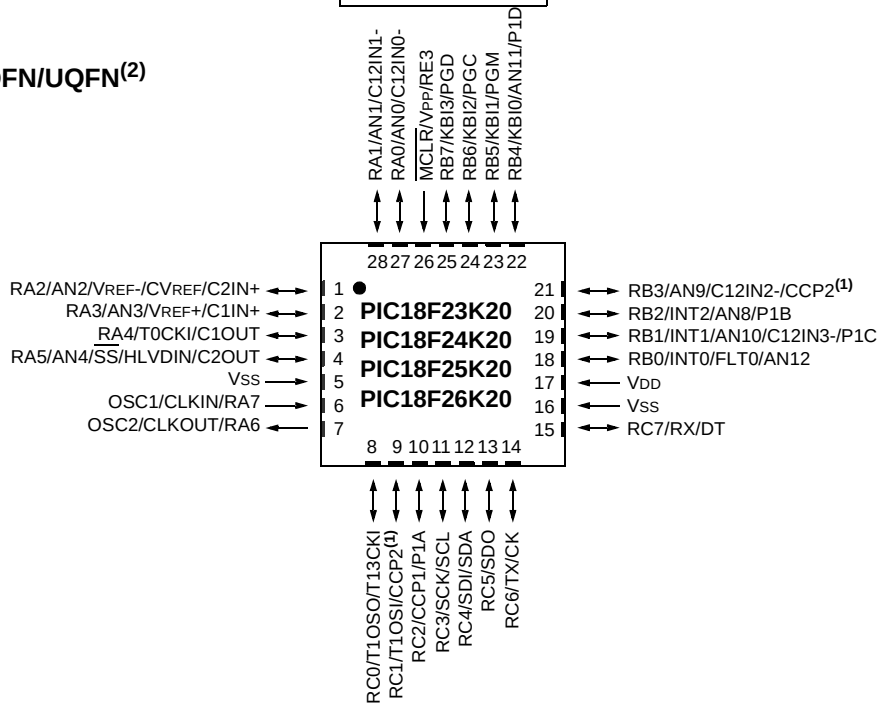

Note 1: RB3 is the alternate pin for CCP2 multiplexing.

2: UQFN package availability applies only to PIC18F23K20.

Pin Diagrams (Cont.'d)

44-pin TQFP

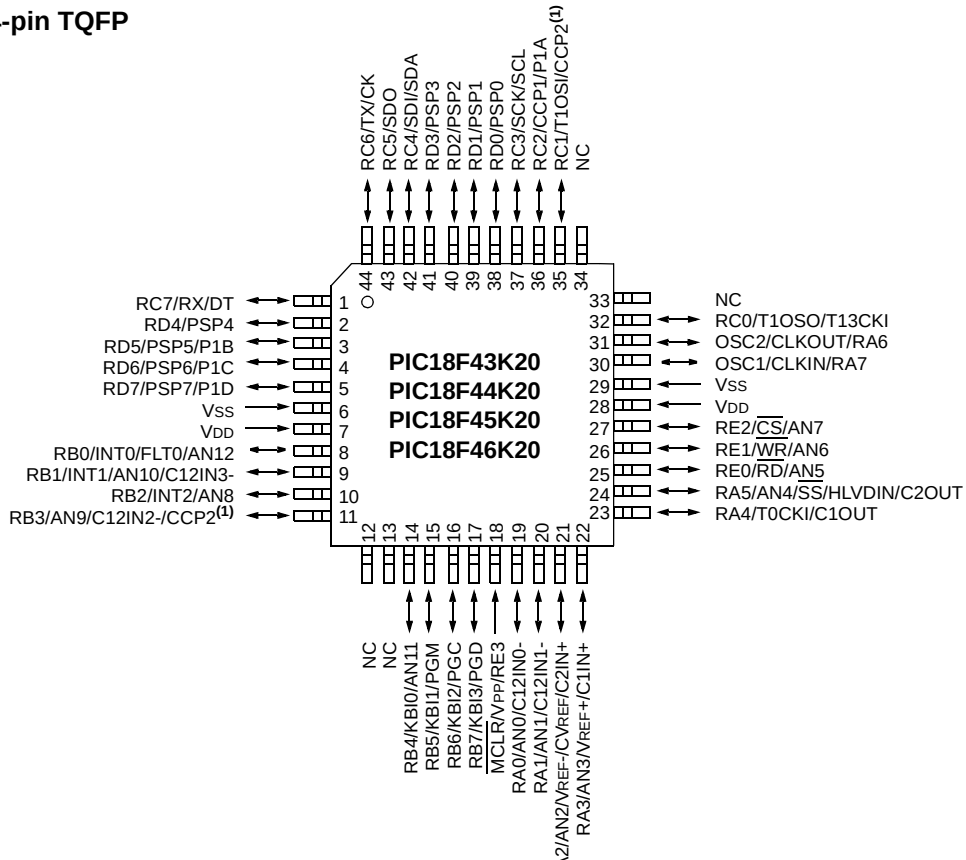

44-pin QFN

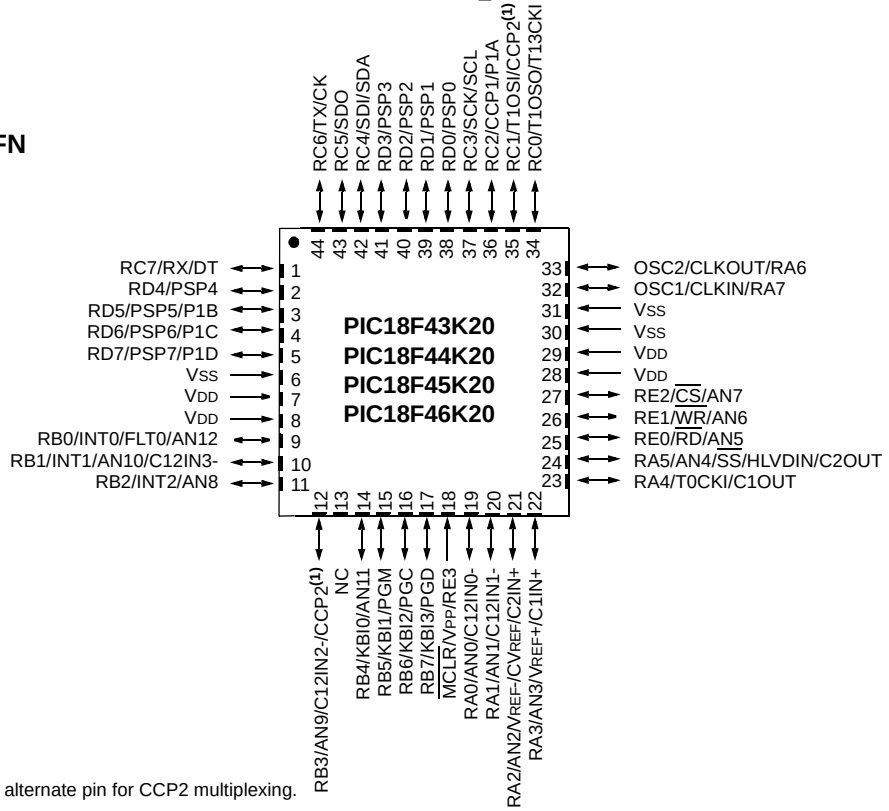

Note 1: RB3 is the alternate pin for CCP2 multiplexing.

© 2010 Microchip Technology Inc.

TABLE 1: PIC18F4XK20 PIN SUMMARY

DIL Pin	TQFP Pin	QFN Pin	I/O	Analog	Comparator	Reference	ECCP	EUSART	MSSP	Timers	Slave	Interrupts	Pull-up	Basic
2	19	19	RA0	AN0	C12IN0-	—	—	—	—	—	—	—	—	—
3	20	20	RA1	AN1	C12IN1-	—	—	—	—	—	—	—	—	—
4	21	21	RA2	AN2	C2IN+	VREF-/ CVREF	—	—	—	—	—	—	—	—
5	22	22	RA3	AN3	C1IN+	VREF+	—	—	—	—	—	—	—	—
6	23	23	RA4		C1OUT	—	—	—	—	T0CKI	—	—	—	—
7	24	24	RA5	AN4	C2OUT	HLVDIN	—	—	$\overline{SS}$	—	—	—	—	—
14	31	33	RA6	—	—	—	—	—	—	—	—	—	—	OSC2/ CLKOUT
13	30	32	RA7	—	—	—	—	—	—	—	—	—	—	OSC1/CLKIN
33	8	9	RB0	AN12	—	—	FLT0	—	—	—	—	INT0	Yes	—
34	9	10	RB1	AN10	C12IN3-	—	—	—	—	—	—	INT1	Yes	—
35	10	11	RB2	AN8	—	—	—	—	—	—	—	INT2	Yes	—
36	11	12	RB3	AN9	C12IN2-	—	CCP2(1)	—	—	—	—	—	Yes	—
37	14	14	RB4	AN11	—	—	—	—	—	—	—	KBI0	Yes	—
38	15	15	RB5	—	—	—	—	—	—	—	—	KBI1	Yes	PGM
39	16	16	RB6	—	—	—	—	—	—	—	—	KBI2	Yes	PGC
40	17	17	RB7	—	—	—	—	—	—	—	—	KBI3	Yes	PGD
15	32	34	RC0	—	—	—	—	—	—	T1OSO/ T13CKI	—	—	—	—
16	35	35	RC1	—	—	—	CCP2(2)	—	—	T1OSI	—	—	—	—
17	36	36	RC2	—	—	—	CCP1/ P1A	—	—	—	—	—	—	—
18	37	37	RC3	—	—	—	—	—	SCK/ SCL	—	—	—	—	—
23	42	42	RC4	—	—	—	—	—	SDI/ SDA	—	—	—	—	—
24	43	43	RC5	—	—	—	—	—	SDO	—	—	—	—	—
25	44	44	RC6	—	—	—	—	TX/CK	—	—	—	—	—	—
26	1	1	RC7	—	—	—	—	RX/DT	—	—	—	—	—	—
19	38	38	RD0	—	—	—	—	—	—	—	PSP0	—	—	—
20	39	39	RD1	—	—	—	—	—	—	—	PSP1	—	—	—
21	40	40	RD2	—	—	—	—	—	—	—	PSP2	—	—	—
22	41	41	RD3	—	—	—	—	—	—	—	PSP3	—	—	—
27	2	2	RD4	—	—	—	—	—	—	—	PSP4	—	—	—
28	3	3	RD5	—	—	—	P1B	—	—	—	PSP5	—	—	—
29	4	4	RD6	—	—	—	P1C	—	—	—	PSP6	—	—	—
30	5	5	RD7	—	—	—	P1D	—	—	—	PSP7	—	—	—
8	25	25	RE0	AN5	—	—	—	—	—	—	$\overline{RD}$	—	—	—
9	26	26	RE1	AN6	—	—	—	—	—	—	$\overline{WR}$	—	—	—
10	27	27	RE2	AN7	—	—	—	—	—	—	$\overline{CS}$	—	—	—
1	18	18	RE3(3)	—	—	—	—	—	—	—	—	—	—	$\overline{MCLR}$/VPP
11	7	7	—	—	—	—	—	—	—	—	—	—	—	VDD
32	28	28	—	—	—	—	—	—	—	—	—	—	—	VDD
12	6	6	—	—	—	—	—	—	—	—	—	—	—	VSS
31	29	30	—	—	—	—	—	—	—	—	—	—	—	VSS
–	NC	8	—	—	—	—	—	—	—	—	—	—	—	VDD
–	NC	29	—	—	—	—	—	—	—	—	—	—	—	VDD
–	NC	31	—	—	—	—	—	—	—	—	—	—	—	VSS

Note 1: CCP2 multiplexed with RB3 when CONFIG3H<0> = 0
2: CCP2 multiplexed with RC1 when CONFIG3H<0> = 1
3: Input-only.

TABLE 2: PIC18F2XK20 PIN SUMMARY

Pin DIL	Pin QUAD	I/O	Analog	Comparator	Reference	ECCP	EUSART	MSSP	Timers	Slave	Interrupts	Pull-up	Basic
2	27	RA0	AN0	C12IN0-									
3	28	RA1	AN1	C12IN1-									
4	1	RA2	AN2	C2IN+	VREF-/ CVREF								
5	2	RA3	AN3	C1IN+	VREF+								
6	3	RA4		C1OUT					T0CKI				
7	4	RA5	AN4	C2OUT	HLVDIN			$\overline{SS}$					
10	7	RA6											OSC2/ CLKOUT
9	6	RA7											OSC1/ CLKIN
21	18	RB0	AN12			FLT0					INT0	Yes	
22	19	RB1	AN10	C12IN3-		P1C					INT1	Yes	
23	20	RB2	AN8			P1B					INT2	Yes	
24	21	RB3	AN9	C12IN2-		CCP2(1)						Yes	
25	22	RB4	AN11			P1D					KBI0	Yes	
26	23	RB5									KBI1	Yes	PGM
27	24	RB6									KBI2	Yes	PGC
28	25	RB7									KBI3	Yes	PGD
11	8	RC0							T1OSO/ T13CKI				
12	9	RC1				CCP2(2)			T1OSI				
13	10	RC2				CCP1/ P1A							
14	11	RC3						SCK/ SCL					
15	12	RC4						SDI/ SDA					
16	13	RC5						SDO					
17	14	RC6					TX/CK						
18	15	RC7					RX/DT						
1	26	RE3(3)											$\overline{MCLR}$/ VPP
8	5												VSS
19	16												VSS
20	17												VDD

Note 1: CCP2 multiplexed with RB3 when CONFIG3H<0> = 0
2: CCP2 multiplexed with RC1 when CONFIG3H<0> = 1
3: Input-only

© 2010 Microchip Technology Inc.

Table of Contents

1.0 Device Overview 11
2.0 Oscillator Module (With Fail-Safe Clock Monitor) 27
3.0 Power-Managed Modes 43
4.0 Reset 51
5.0 Memory Organization 65
6.0 Flash Program Memory 89
7.0 Data EEPROM Memory 99
8.0 8 x 8 Hardware Multiplier 105
9.0 Interrupts 107
10.0 I/O Ports 121
11.0 Capture/Compare/PWM (CCP) Modules 143
12.0 Timer0 Module 155
13.0 Timer1 Module 159
14.0 Timer2 Module 167
15.0 Timer3 Module 169
16.0 Enhanced Capture/Compare/PWM (ECCP) Module 173
17.0 Master Synchronous Serial Port (MSSP) Module 193
18.0 Enhanced Universal Synchronous Asynchronous Receiver Transmitter (EUSART) 237
19.0 Analog-to-Digital Converter (ADC) Module 265
20.0 Comparator Module 279
21.0 Voltage References 289
22.0 High/Low-Voltage Detect (HLVD) 293
23.0 Special Features of the CPU 299
24.0 Instruction Set Summary 315
25.0 Development Support 365
26.0 Electrical Characteristics 369
27.0 DC and AC Characteristics Graphs and Tables 403
28.0 Packaging Information 427
Appendix A: Revision History 441
Appendix B: Device Differences 442
Index 443
The Microchip Web Site 453
Customer Change Notification Service 453
Customer Support 453
Reader Response 454
Product Identification System 455

TO OUR VALUED CUSTOMERS

It is our intention to provide our valued customers with the best documentation possible to ensure successful use of your Microchip products. To this end, we will continue to improve our publications to better suit your needs. Our publications will be refined and enhanced as new volumes and updates are introduced.

If you have any questions or comments regarding this publication, please contact the Marketing Communications Department via E-mail at **docerrors@mail.microchip.com** or fax the **Reader Response Form** in the back of this data sheet to (480) 792-4150. We welcome your feedback.

Most Current Data Sheet

To obtain the most up-to-date version of this data sheet, please register at our Worldwide Web site at:

http://www.microchip.com

You can determine the version of a data sheet by examining its literature number found on the bottom outside corner of any page. The last character of the literature number is the version number, (e.g., DS30000A is version A of document DS30000).

Errata

An errata sheet, describing minor operational differences from the data sheet and recommended workarounds, may exist for current devices. As device/documentation issues become known to us, we will publish an errata sheet. The errata will specify the revision of silicon and revision of document to which it applies.

To determine if an errata sheet exists for a particular device, please check with one of the following:

- Microchip's Worldwide Web site; http://www.microchip.com
- Your local Microchip sales office (see last page)
- The Microchip Corporate Literature Center; U.S. FAX: (480) 792-7277

When contacting a sales office or the literature center, please specify which device, revision of silicon and data sheet (include literature number) you are using.

Customer Notification System

Register on our web site at **www.microchip.com/cn** to receive the most current information on all of our products.

© 2010 Microchip Technology Inc.

1.0 DEVICE OVERVIEW

This document contains device specific information for the following devices:

- PIC18F23K20
- PIC18F24K20
- PIC18F25K20
- PIC18F26K20
- PIC18F43K20
- PIC18F44K20
- PIC18F45K20
- PIC18F46K20

This family offers the advantages of all PIC18 microcontrollers – namely, high computational performance at an economical price – with the addition of high-endurance, Flash program memory. On top of these features, the PIC18F2XK20/4XK20 family introduces design enhancements that make these microcontrollers a logical choice for many high-performance, power sensitive applications.

1.1 New Core Features

1.1.1 nanoWatt TECHNOLOGY

All of the devices in the PIC18F2XK20/4XK20 family incorporate a range of features that can significantly reduce power consumption during operation. Key items include:

- **Alternate Run Modes:** By clocking the controller from the Timer1 source or the internal oscillator block, power consumption during code execution can be reduced by as much as 90%.
- **Multiple Idle Modes:** The controller can also run with its CPU core disabled but the peripherals still active. In these states, power consumption can be reduced even further, to as little as 4% of normal operation requirements.
- **On-the-fly Mode Switching:** The power-managed modes are invoked by user code during operation, allowing the user to incorporate power-saving ideas into their application's software design.
- **Low Consumption in Key Modules:** The power requirements for both Timer1 and the Watchdog Timer are minimized. See **Section 26.0 "Electrical Characteristics"** for values.

1.1.2 MULTIPLE OSCILLATOR OPTIONS AND FEATURES

All of the devices in the PIC18F2XK20/4XK20 family offer ten different oscillator options, allowing users a wide range of choices in developing application hardware. These include:

- Four Crystal modes, using crystals or ceramic resonators
- Two External Clock modes, offering the option of using two pins (oscillator input and a divide-by-4 clock output) or one pin (oscillator input, with the second pin reassigned as general I/O)
- Two External RC Oscillator modes with the same pin options as the External Clock modes
- An internal oscillator block which contains a 16 MHz HFINTOSC oscillator and a 31 kHz LFINTOSC oscillator which together provide 8 user selectable clock frequencies, from 31 kHz to 16 MHz. This option frees the two oscillator pins for use as additional general purpose I/O.
- A Phase Lock Loop (PLL) frequency multiplier, available to both the high-speed crystal and internal oscillator modes, which allows clock speeds of up to 64 MHz. Used with the internal oscillator, the PLL gives users a complete selection of clock speeds, from 31 kHz to 64 MHz – all without using an external crystal or clock circuit.

Besides its availability as a clock source, the internal oscillator block provides a stable reference source that gives the family additional features for robust operation:

- **Fail-Safe Clock Monitor:** This option constantly monitors the main clock source against a reference signal provided by the LFINTOSC. If a clock failure occurs, the controller is switched to the internal oscillator block, allowing for continued operation or a safe application shutdown.
- **Two-Speed Start-up:** This option allows the internal oscillator to serve as the clock source from Power-on Reset, or wake-up from Sleep mode, until the primary clock source is available.

1.2 Other Special Features

- **Memory Endurance:** The Flash cells for both program memory and data EEPROM are rated to last for many thousands of erase/write cycles – up to 10K for program memory and 100K for EEPROM. Data retention without refresh is conservatively estimated to be greater than 40 years.
- **Self-programmability:** These devices can write to their own program memory spaces under internal software control. By using a bootloader routine located in the protected Boot Block at the top of program memory, it becomes possible to create an application that can update itself in the field.
- **Extended Instruction Set:** The PIC18F2XK20/4XK20 family introduces an optional extension to the PIC18 instruction set, which adds 8 new instructions and an Indexed Addressing mode. This extension, enabled as a device configuration option, has been specifically designed to optimize re-entrant application code originally developed in high-level languages, such as C.
- **Enhanced CCP module:** In PWM mode, this module provides 1, 2 or 4 modulated outputs for controlling half-bridge and full-bridge drivers. Other features include:
  - Auto-Shutdown, for disabling PWM outputs on interrupt or other select conditions
  - Auto-Restart, to reactivate outputs once the condition has cleared
  - Output steering to selectively enable one or more of 4 outputs to provide the PWM signal.
- **Enhanced Addressable USART:** This serial communication module is capable of standard RS-232 operation and provides support for the LIN bus protocol. Other enhancements include automatic baud rate detection and a 16-bit Baud Rate Generator for improved resolution. When the microcontroller is using the internal oscillator block, the USART provides stable operation for applications that talk to the outside world without using an external crystal (or its accompanying power requirement).
- **10-bit A/D Converter:** This module incorporates programmable acquisition time, allowing for a channel to be selected and a conversion to be initiated without waiting for a sampling period and thus, reduce code overhead.
- **Extended Watchdog Timer (WDT):** This enhanced version incorporates a 16-bit postscaler, allowing an extended time-out range that is stable across operating voltage and temperature. See **Section 26.0 “Electrical Characteristics”** for time-out periods.

1.3 Details on Individual Family Members

Devices in the PIC18F2XK20/4XK20 family are available in 28-pin and 40/44-pin packages. Block diagrams for the two groups are shown in Figure 1-1 and Figure 1-2.

The devices are differentiated from each other in five ways:

1. Flash program memory (8 Kbytes for PIC18F23K20/43K20 devices, 16 Kbytes for PIC18F24K20/44K20 devices, 32 Kbytes for PIC18F25K20/45K20 AND 64 Kbytes for PIC18F26K20/46K20).
2. A/D channels (11 for 28-pin devices, 14 for 40/44-pin devices).
3. I/O ports (3 bidirectional ports on 28-pin devices, 5 bidirectional ports on 40/44-pin devices).
4. Parallel Slave Port (present only on 40/44-pin devices).

All other features for devices in this family are identical. These are summarized in Table 1-1.

The pinouts for all devices are listed in the pin summary tables: Table 1 and Table 2, and I/O description tables: Table 1-2 and Table 1-3.

© 2010 Microchip Technology Inc.

TABLE 1-1: DEVICE FEATURES

Features	PIC18F23K20	PIC18F24K20	PIC18F25K20	PIC18F26K20	PIC18F43K20	PIC18F44K20	PIC18F45K20	PIC18F46K20
Operating Frequency[2]	DC – 64 MHz	DC – 64 MHz	DC – 64 MHz	DC – 64 MHz	DC – 64 MHz	DC – 64 MHz	DC – 64 MHz	DC – 64 MHz
Program Memory (Bytes)	8192	16384	32768	65536	8192	16384	32768	65536
Program Memory (Instructions)	4096	8192	16384	32768	4096	8192	16384	32768
Data Memory (Bytes)	512	768	1536	3936	512	768	1536	3936
Data EEPROM Memory (Bytes)	256	256	256	1024	256	256	256	1024
Interrupt Sources	19	19	19	19	20	20	20	20
I/O Ports	A, B, C, (E)[1]	A, B, C, (E)[1]	A, B, C, (E)[1]	A, B, C, (E)[1]	A, B, C, D, E	A, B, C, D, E	A, B, C, D, E	A, B, C, D, E
Timers	4	4	44		44		44	
Capture/Compare/PWM Modules	1	1	1	1	1	1	1	1
Enhanced Capture/ Compare/PWM Modules	1	1	11		11		11	
Serial Communications	MSSP, Enhanced USART	MSSP, Enhanced USART	MSSP, Enhanced USART	MSSP, Enhanced USART	MSSP, Enhanced USART	MSSP, Enhanced USART	MSSP, Enhanced USART	MSSP, Enhanced USART
Parallel Communications (PSP)	No	No	No	No	Yes	Yes	Yes	Yes
10-bit Analog-to-Digital Module	1 internal plus 10 Input Channels	1 internal plus 10 Input Channels	1 internal plus 10 Input Channels	1 internal plus 10 Input Channels	1 internal plus 13 Input Channels	1 internal plus 13 Input Channels	1 internal plus 13 Input Channels	1 internal plus 13 Input Channels
Resets (and Delays)	POR, BOR, RESET Instruction, Stack Full, Stack Underflow (PWRT, OST), MCLR (optional), WDT	POR, BOR, RESET Instruction, Stack Full, Stack Underflow (PWRT, OST), MCLR (optional), WDT	POR, BOR, RESET Instruction, Stack Full, Stack Underflow (PWRT, OST), MCLR (optional), WDT	POR, BOR, RESET Instruction, Stack Full, Stack Underflow (PWRT, OST), MCLR (optional), WDT	POR, BOR, RESET Instruction, Stack Full, Stack Underflow (PWRT, OST), MCLR (optional), WDT	POR, BOR, RESET Instruction, Stack Full, Stack Underflow (PWRT, OST), MCLR (optional), WDT	POR, BOR, RESET Instruction, Stack Full, Stack Underflow (PWRT, OST), MCLR (optional), WDT	POR, BOR, RESET Instruction, Stack Full, Stack Underflow (PWRT, OST), MCLR (optional), WDT
Programmable High/ Low-Voltage Detect	Yes	Yes	Yes	Yes	Yes	Yes	Yes	Yes
Programmable Brown-out Reset	Yes	Yes	Yes	Yes	Yes	Yes	Yes	Yes
Instruction Set	75 Instructions; 83 with Extended Instruction Set enabled	75 Instructions; 83 with Extended Instruction Set enabled	75 Instructions; 83 with Extended Instruction Set enabled	75 Instructions; 83 with Extended Instruction Set enabled	75 Instructions; 83 with Extended Instruction Set enabled	75 Instructions; 83 with Extended Instruction Set enabled	75 Instructions; 83 with Extended Instruction Set enabled	75 Instructions; 83 with Extended Instruction Set enabled
Packages	28-pin PDIP 28-pin SOIC 28-pin QFN 28-pin SSOP 28-pin UQFN	28-pin PDIP 28-pin SOIC 28-pin QFN 28-pin SSOP	28-pin PDIP 28-pin SOIC 28-pin QFN 28-pin SSOP	28-pin PDIP 28-pin SOIC 28-pin QFN 28-pin SSOP	40-pin PDIP 44-pin QFN 44-pin TQFP	40-pin PDIP 44-pin QFN 44-pin TQFP	40-pin PDIP 44-pin QFN 44-pin TQFP	40-pin PDIP 44-pin QFN 44-pin TQFP

Note 1: PORTE contains the single RE3 read-only bit. The LATE and TRISE registers are not implemented.

2: Frequency range shown applies to industrial range devices only. Maximum frequency for extended range devices is 48 MHz.

© 2010 Microchip Technology Inc.

FIGURE 1-1: PIC18F2XK20 (28-PIN) BLOCK DIAGRAM

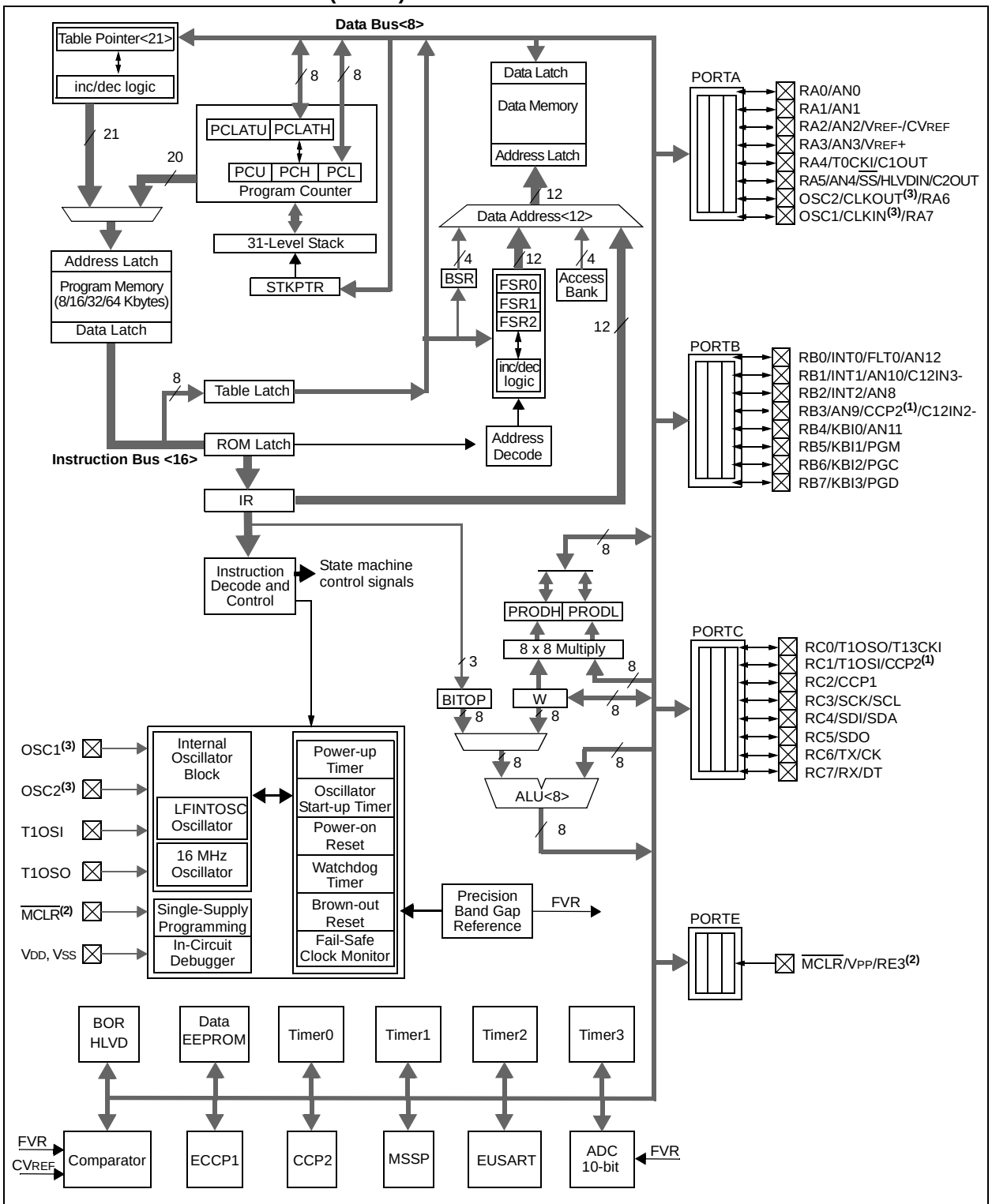

Note 1: CCP2 is multiplexed with RC1 when Configuration bit CCP2MX is set, or RB3 when CCP2MX is not set.

2: RE3 is only available when MCLR functionality is disabled.

3: OSC1/CLKIN and OSC2/CLKOUT are only available in select oscillator modes and when these pins are not being used as digital I/O. Refer to **Section 2.0 "Oscillator Module (With Fail-Safe Clock Monitor)"** for additional information.

© 2010 Microchip Technology Inc.

FIGURE 1-2: PIC18F4XK20 (40/44-PIN) BLOCK DIAGRAM

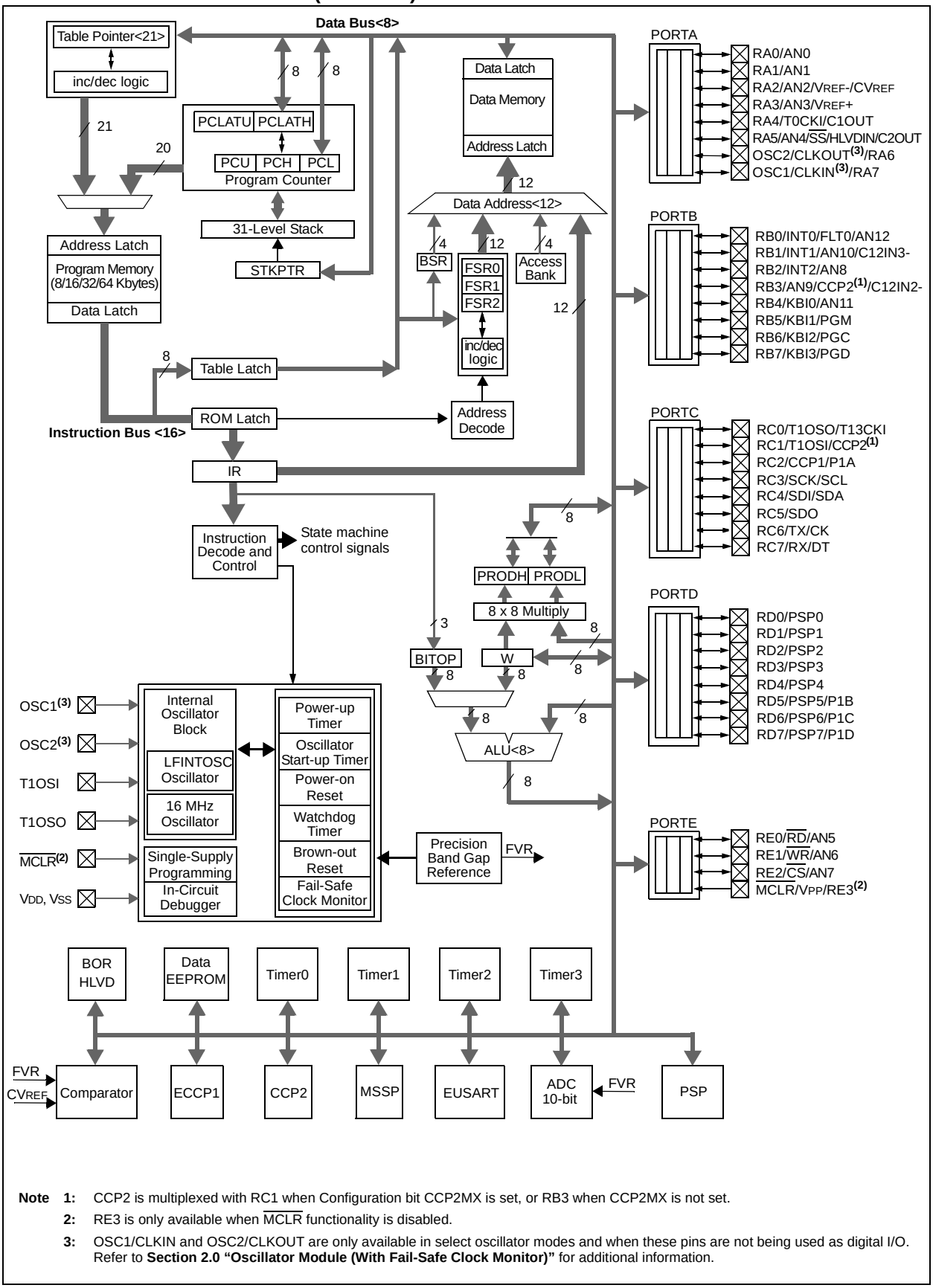

Note 1: CCP2 is multiplexed with RC1 when Configuration bit CCP2MX is set, or RB3 when CCP2MX is not set.

2: RE3 is only available when MCLR functionality is disabled.

3: OSC1/CLKIN and OSC2/CLKOUT are only available in select oscillator modes and when these pins are not being used as digital I/O. Refer to **Section 2.0 "Oscillator Module (With Fail-Safe Clock Monitor)"** for additional information.

TABLE 1-2: PIC18F2XK20 PINOUT I/O DESCRIPTIONS

Pin Name	Pin Number		Pin Type	Buffer Type	Description
	PDIP, SOIC	QFN			
$\overline{\text{MCLR}}$/VPP/RE3	1	26			Master Clear (input) or programming voltage (input)
$\overline{\text{MCLR}}$			I	ST	Active-low Master Clear (device Reset) input
VPP			P		Programming voltage input
RE3			I	ST	Digital input
OSC1/CLKIN/RA7	9	6			Oscillator crystal or external clock input
OSC1			I	ST	Oscillator crystal input or external clock source input ST buffer when configured in RC mode; CMOS otherwise
CLKIN			I	CMOS	External clock source input. Always associated with pin function OSC1. (See related OSC1/CLKIN, OSC2/CLKOUT pins)
RA7			I/O	TTL	General purpose I/O pin
OSC2/CLKOUT/RA6	10	7			Oscillator crystal or clock output
OSC2			O	—	Oscillator crystal output. Connects to crystal or resonator in Crystal Oscillator mode
CLKOUT			O	—	In RC mode, OSC2 pin outputs CLKOUT which has 1/4 the frequency of OSC1 and denotes the instruction cycle rate
RA6			I/O	TTL	General purpose I/O pin

Legend: TTL = TTL compatible input
CMOS = CMOS compatible input or output
ST = Schmitt Trigger input with CMOS levels
I = Input
O = Output
P = Power

Note 1: Default assignment for CCP2 when Configuration bit CCP2MX is set.
2: Alternate assignment for CCP2 when Configuration bit CCP2MX is cleared.

© 2010 Microchip Technology Inc.

TABLE 1-2: PIC18F2XK20 PINOUT I/O DESCRIPTIONS (CONTINUED)

Pin Name	Pin Number		Pin Type	Buffer Type	Description
	PDIP, SOIC	QFN			
					PORTA is a bidirectional I/O port.
RA0/AN0/C12IN0-	2	27			
RA0			I/O	TTL	Digital I/O
AN0			I	Analog	Analog input 0, ADC channel 0
C12IN0-			I	Analog	Comparators C1 and C2 inverting input
RA1/AN1/C12IN1-	3	28			
RA1			I/O	TTL	Digital I/O
AN1			I	Analog	ADC input 1, ADC channel 1
C12IN1-			I	Analog	Comparators C1 and C2 inverting input
RA2/AN2/VREF-/CVREF/ C2IN+	4	1			
RA2			I/O	TTL	Digital I/O
AN2			I	Analog	Analog input 2, ADC channel 2
VREF-			I	Analog	A/D reference voltage (low) input
CVREF			O	Analog	Comparator reference voltage output
C2IN+			I	Analog	Comparator C2 non-inverting input
RA3/AN3/VREF+/C1IN+	5	2			
RA3			I/O	TTL	Digital I/O
AN3			I	Analog	Analog input 3, ADC channel 3
VREF+			I	Analog	A/D reference voltage (high) input
C1IN+			I	Analog	Comparator C1 non-inverting input
RA4/T0CKI/C1OUT	6	3			
RA4			I/O	ST	Digital I/O
T0CKI			I	ST	Timer0 external clock input
C1OUT			O	CMOS	Comparator C1 output
RA5/AN4/$\overline{SS}$/HLVDIN/ C2OUT	7	4			
RA5			I/O	TTL	Digital I/O
AN4			I	Analog	Analog input 4, ADC channel 4
$\overline{SS}$			I	TTL	SPI slave select input
HLVDIN			I	Analog	High/Low-Voltage Detect input
C2OUT			O	CMOS	Comparator C2 output
RA6					See the OSC2/CLKOUT/RA6 pin
RA7					See the OSC1/CLKIN/RA7 pin

Legend: TTL = TTL compatible input
CMOS = CMOS compatible input or output
ST = Schmitt Trigger input with CMOS levels
I = Input
O = Output
P = Power

Note 1: Default assignment for CCP2 when Configuration bit CCP2MX is set.
2: Alternate assignment for CCP2 when Configuration bit CCP2MX is cleared.

TABLE 1-2: PIC18F2XK20 PINOUT I/O DESCRIPTIONS (CONTINUED)

Pin Name	Pin Number		Pin Type	Buffer Type	Description
	PDIP, SOIC	QFN			
					PORTB is a bidirectional I/O port. PORTB can be software programmed for internal weak pull-up on each input.
RB0/INT0/FLT0/AN12	21	18			
RB0			I/O	TTL	Digital I/O
INT0			I	ST	External interrupt 0
FLT0			I	ST	PWM Fault input for CCP1
AN12			I	Analog	Analog input 12, ADC channel 12
RB1/INT1/AN10/C12IN3-/P1C	22	19			
RB1			I/O	TTL	Digital I/O
INT1			I	ST	External interrupt 1
AN10			I	Analog	Analog input 10, ADC channel 10
C12IN3-			I	Analog	Comparators C1 and C2 inverting input
P1C			O	CMOS	Enhanced CCP1 PWM output
RB2/INT2/AN8/P1B	23	20			
RB2			I/O	TTL	Digital I/O
INT2			I	ST	External interrupt 2
AN8			I	Analog	Analog input 8, ADC channel 8
P1B			O	CMOS	Enhanced CCP1 PWM output
RB3/AN9/C12IN2-/CCP2	24	21			
RB3			I/O	TTL	Digital I/O
AN9			I	Analog	Analog input 9, ADC channel 9
C12IN2-			I	Analog	Comparators C1 and C2 inverting input
CCP2(2)			I/O	ST	Capture 2 input/Compare 2 output/PWM 2 output
RB4/KBI0/AN11/P1D	25	22			
RB4			I/O	TTL	Digital I/O
KBI0			I	TTL	Interrupt-on-change pin
AN11			I	Analog	Analog input 11, ADC channel 11
P1D			O	CMOS	Enhanced CCP1 PWM output
RB5/KBI1/PGM	26	23			
RB5			I/O	TTL	Digital I/O
KBI1			I	TTL	Interrupt-on-change pin
PGM			I/O	ST	Low-Voltage ICSP™ Programming enable pin
RB6/KBI2/PGC	27	24			
RB6			I/O	TTL	Digital I/O
KBI2			I	TTL	Interrupt-on-change pin
PGC			I/O	ST	In-Circuit Debugger and ICSP™ programming clock pin
RB7/KBI3/PGD	28	25			
RB7			I/O	TTL	Digital I/O
KBI3			I	TTL	Interrupt-on-change pin
PGD			I/O	ST	In-Circuit Debugger and ICSP™ programming data pin

Legend: TTL = TTL compatible input
CMOS = CMOS compatible input or output
ST = Schmitt Trigger input with CMOS levels
I = Input
O = Output
P = Power

Note 1: Default assignment for CCP2 when Configuration bit CCP2MX is set.
2: Alternate assignment for CCP2 when Configuration bit CCP2MX is cleared.

© 2010 Microchip Technology Inc.

TABLE 1-2: PIC18F2XK20 PINOUT I/O DESCRIPTIONS (CONTINUED)

Pin Name	Pin Number		Pin Type	Buffer Type	Description
	PDIP, SOIC	QFN			
					PORTC is a bidirectional I/O port.
RC0/T1OSO/T13CKI	11	8			
RC0			I/O	ST	Digital I/O
T1OSO			O	—	Timer1 oscillator output
T13CKI			I	ST	Timer1/Timer3 external clock input
RC1/T1OSI/CCP2	12	9			
RC1			I/O	ST	Digital I/O
T1OSI			I	Analog	Timer1 oscillator input
CCP2(1)			I/O	ST	Capture 2 input/Compare 2 output/PWM 2 output
RC2/CCP1/P1A	13	10			
RC2			I/O	ST	Digital I/O
CCP1			I/O	ST	Capture 1 input/Compare 1 output
P1A			O	CMOS	Enhanced CCP1 PWM output
RC3/SCK/SCL	14	11			
RC3			I/O	ST	Digital I/O
SCK			I/O	ST	Synchronous serial clock input/output for SPI mode
SCL			I/O	ST	Synchronous serial clock input/output for I^2C™ mode
RC4/SDI/SDA	15	12			
RC4			I/O	ST	Digital I/O
SDI			I	ST	SPI data in
SDA			I/O	ST	I^2C™ data I/O
RC5/SDO	16	13			
RC5			I/O	ST	Digital I/O
SDO			O	—	SPI data out
RC6/TX/CK	17	14			
RC6			I/O	ST	Digital I/O
TX			O	—	EUSART asynchronous transmit
CK			I/O	ST	EUSART synchronous clock (see related RX/DT)
RC7/RX/DT	18	15			
RC7			I/O	ST	Digital I/O
RX			I	ST	EUSART asynchronous receive
DT			I/O	ST	EUSART synchronous data (see related TX/CK)
RE3	—	—	—	—	See $\overline{MCLR}$/VPP/RE3 pin
VSS	8, 19	5, 16	P	—	Ground reference for logic and I/O pins
VDD	20	17	P	—	Positive supply for logic and I/O pins

Legend: TTL = TTL compatible input
CMOS = CMOS compatible input or output
ST = Schmitt Trigger input with CMOS levels
I = Input
O = Output
P = Power

Note 1: Default assignment for CCP2 when Configuration bit CCP2MX is set.
2: Alternate assignment for CCP2 when Configuration bit CCP2MX is cleared.

TABLE 1-3: PIC18F4XK20 PINOUT I/O DESCRIPTIONS

Pin Name	Pin Number			Pin Type	Buffer Type	Description
	PDIP	QFN	TQFP			
$\overline{MCLR}$/VPP/RE3	1	18	18			Master Clear (input) or programming voltage (input)
$\overline{MCLR}$				I	ST	Active-low Master Clear (device Reset) input
VPP				P		Programming voltage input
RE3				I	ST	Digital input
OSC1/CLKIN/RA7	13	32	30			Oscillator crystal or external clock input
OSC1				I	ST	Oscillator crystal input or external clock source input. ST buffer when configured in RC mode; analog otherwise
CLKIN				I	CMOS	External clock source input. Always associated with pin function OSC1 (See related OSC1/CLKIN, OSC2/CLKOUT pins)
RA7				I/O	TTL	General purpose I/O pin
OSC2/CLKOUT/RA6	14	33	31			Oscillator crystal or clock output
OSC2				O	—	Oscillator crystal output. Connects to crystal or resonator in Crystal Oscillator mode
CLKOUT				O	—	In RC mode, OSC2 pin outputs CLKOUT which has 1/4 the frequency of OSC1 and denotes the instruction cycle rate
RA6				I/O	TTL	General purpose I/O pin

Legend: TTL = TTL compatible input
ST = Schmitt Trigger input with CMOS levels
O = Output
CMOS = CMOS compatible input or output
I = Input
P = Power

Note 1: Default assignment for CCP2 when Configuration bit CCP2MX is set.
2: Alternate assignment for CCP2 when Configuration bit CCP2MX is cleared.

© 2010 Microchip Technology Inc.

TABLE 1-3: PIC18F4XK20 PINOUT I/O DESCRIPTIONS (CONTINUED)

Pin Name	Pin Number			Pin Type	Buffer Type	Description
	PDIP	QFN	TQFP			
						PORTA is a bidirectional I/O port.
RA0/AN0/C12IN0-	2	19	19			
RA0				I/O	TTL	Digital I/O
AN0				I	Analog	Analog input 0, ADC channel 0
C12IN0-				I	Analog	Comparator C1 and C2 inverting input
RA1/AN1/C12IN0-	3	20	20			
RA1				I/O	TTL	Digital I/O
AN1				I	Analog	Analog input 1, ADC channel 1
C12IN0-				I	Analog	Comparator C1 and C2 inverting input
RA2/AN2/VREF-/CVREF/ C2IN+	4	21	21			
RA2				I/O	TTL	Digital I/O
AN2				I	Analog	Analog input 2, ADC channel 2
VREF-				I	Analog	A/D reference voltage (low) input
CVREF				O	Analog	Comparator reference voltage output
C2IN+				I	Analog	Comparator C2 non-inverting input
RA3/AN3/VREF+/ C1IN+	5	22	22			
RA3				I/O	TTL	Digital I/O
AN3				I	Analog	Analog input 3, ADC channel 3
VREF+				I	Analog	A/D reference voltage (high) input
C1IN+				I	Analog	Comparator C1 non-inverting input
RA4/T0CKI/C1OUT	6	23	23			
RA4				I/O	ST	Digital I/O
T0CKI				I	ST	Timer0 external clock input
C1OUT				O	CMOS	Comparator C1 output
RA5/AN4/$\overline{SS}$/HLVDIN/ C2OUT	7	24	24			
RA5				I/O	TTL	Digital I/O
AN4				I	Analog	Analog input 4, ADC channel 4
$\overline{SS}$				I	TTL	SPI slave select input
HLVDIN				I	Analog	High/Low-Voltage Detect input
C2OUT				O	CMOS	Comparator C2 output
RA6						See the OSC2/CLKOUT/RA6 pin
RA7						See the OSC1/CLKIN/RA7 pin

Legend: TTL = TTL compatible input
CMOS = CMOS compatible input or output
ST = Schmitt Trigger input with CMOS levels
I = Input
O = Output
P = Power

Note 1: Default assignment for CCP2 when Configuration bit CCP2MX is set.
2: Alternate assignment for CCP2 when Configuration bit CCP2MX is cleared.

TABLE 1-3: PIC18F4XK20 PINOUT I/O DESCRIPTIONS (CONTINUED)

Pin Name	Pin Number			Pin Type	Buffer Type	Description
	PDIP	QFN	TQFP			
						PORTB is a bidirectional I/O port. PORTB can be software programmed for internal weak pull-up on each input.
RB0/INT0/FLT0/AN12	33	9	8			
RB0				I/O	TTL	Digital I/O
INT0				I	ST	External interrupt 0
FLT0				I	ST	PWM Fault input for Enhanced CCP1
AN12				I	Analog	Analog input 12, ADC channel 12
RB1/INT1/AN10/ C12IN3-	34	10	9			
RB1				I/O	TTL	Digital I/O
INT1				I	ST	External interrupt 1
AN10				I	Analog	Analog input 10, ADC channel 10
C12IN3-				I	Analog	Comparator C1 and C2 inverting input
RB2/INT2/AN8	35	11	10			
RB2				I/O	TTL	Digital I/O
INT2				I	ST	External interrupt 2
AN8				I	Analog	Analog input 8, ADC channel 8
RB3/AN9/C12IN2-/ CCP2	36	12	11			
RB3				I/O	TTL	Digital I/O
AN9				I	Analog	Analog input 9, ADC channel 9
C12IN23-				I	Analog	Comparator C1 and C2 inverting input
CCP2(2)				I/O	ST	Capture 2 input/Compare 2 output/PWM 2 output
RB4/KBI0/AN11	37	14	14			
RB4				I/O	TTL	Digital I/O
KBI0				I	TTL	Interrupt-on-change pin
AN11				I	Analog	Analog input 11, ADC channel 11
RB5/KBI1/PGM	38	15	15			
RB5				I/O	TTL	Digital I/O
KBI1				I	TTL	Interrupt-on-change pin
PGM				I/O	ST	Low-Voltage ICSP™ Programming enable pin
RB6/KBI2/PGC	39	16	16			
RB6				I/O	TTL	Digital I/O
KBI2				I	TTL	Interrupt-on-change pin
PGC				I/O	ST	In-Circuit Debugger and ICSP™ programming clock pin
RB7/KBI3/PGD	40	17	17			
RB7				I/O	TTL	Digital I/O
KBI3				I	TTL	Interrupt-on-change pin
PGD				I/O	ST	In-Circuit Debugger and ICSP™ programming data pin

Legend: TTL = TTL compatible input
CMOS = CMOS compatible input or output
ST = Schmitt Trigger input with CMOS levels
I = Input
O = Output
P = Power

Note 1: Default assignment for CCP2 when Configuration bit CCP2MX is set.
2: Alternate assignment for CCP2 when Configuration bit CCP2MX is cleared.

© 2010 Microchip Technology Inc.

TABLE 1-3: PIC18F4XK20 PINOUT I/O DESCRIPTIONS (CONTINUED)

Pin Name	Pin Number			Pin Type	Buffer Type	Description
	PDIP	QFN	TQFP			
						PORTC is a bidirectional I/O port.
RC0/T1OSO/T13CKI	15	34	32			
RC0				I/O	ST	Digital I/O
T1OSO				O	—	Timer1 oscillator output
T13CKI				I	ST	Timer1/Timer3 external clock input
RC1/T1OSI/CCP2	16	35	35			
RC1				I/O	ST	Digital I/O
T1OSI				I	CMOS	Timer1 oscillator input
CCP2(1)				I/O	ST	Capture 2 input/Compare 2 output/PWM 2 output
RC2/CCP1/P1A	17	36	36			
RC2				I/O	ST	Digital I/O
CCP1				I/O	ST	Capture 1 input/Compare 1 output/PWM 1 output
P1A				O	—	Enhanced CCP1 output
RC3/SCK/SCL	18	37	37			
RC3				I/O	ST	Digital I/O
SCK				I/O	ST	Synchronous serial clock input/output for SPI mode
SCL				I/O	ST	Synchronous serial clock input/output for I^2C™ mode
RC4/SDI/SDA	23	42	42			
RC4				I/O	ST	Digital I/O
SDI				I	ST	SPI data in
SDA				I/O	ST	I^2C™ data I/O
RC5/SDO	24	43	43			
RC5				I/O	ST	Digital I/O
SDO				O	—	SPI data out
RC6/TX/CK	25	44	44			
RC6				I/O	ST	Digital I/O
TX				O	—	EUSART asynchronous transmit
CK				I/O	ST	EUSART synchronous clock (see related RX/DT)
RC7/RX/DT	26	1	1			
RC7				I/O	ST	Digital I/O
RX				I	ST	EUSART asynchronous receive
DT				I/O	ST	EUSART synchronous data (see related TX/CK)

Legend: TTL = TTL compatible input; CMOS = CMOS compatible input or output; ST = Schmitt Trigger input with CMOS levels; I = Input; O = Output; P = Power

Note 1: Default assignment for CCP2 when Configuration bit CCP2MX is set.
2: Alternate assignment for CCP2 when Configuration bit CCP2MX is cleared.

TABLE 1-3: PIC18F4XK20 PINOUT I/O DESCRIPTIONS (CONTINUED)

Pin Name	Pin Number			Pin Type	Buffer Type	Description
	PDIP	QFN	TQFP			
						PORTD is a bidirectional I/O port or a Parallel Slave Port (PSP) for interfacing to a microprocessor port. These pins have TTL input buffers when PSP module is enabled.
RD0/PSP0	19	38	38			
RD0				I/O	ST	Digital I/O
PSP0				I/O	TTL	Parallel Slave Port data
RD1/PSP1	20	39	39			
RD1				I/O	ST	Digital I/O
PSP1				I/O	TTL	Parallel Slave Port data
RD2/PSP2	21	40	40			
RD2				I/O	ST	Digital I/O
PSP2				I/O	TTL	Parallel Slave Port data
RD3/PSP3	22	41	41			
RD3				I/O	ST	Digital I/O
PSP3				I/O	TTL	Parallel Slave Port data
RD4/PSP4	27	2	2			
RD4				I/O	ST	Digital I/O
PSP4				I/O	TTL	Parallel Slave Port data
RD5/PSP5/P1B	28	3	3			
RD5				I/O	ST	Digital I/O
PSP5				I/O	TTL	Parallel Slave Port data
P1B				O	—	Enhanced CCP1 output
RD6/PSP6/P1C	29	4	4			
RD6				I/O	ST	Digital I/O
PSP6				I/O	TTL	Parallel Slave Port data
P1C				O	—	Enhanced CCP1 output
RD7/PSP7/P1D	30	5	5			
RD7				I/O	ST	Digital I/O
PSP7				I/O	TTL	Parallel Slave Port data
P1D				O	—	Enhanced CCP1 output

Legend: TTL = TTL compatible input
CMOS = CMOS compatible input or output
ST = Schmitt Trigger input with CMOS levels
I = Input
O = Output
P = Power

Note 1: Default assignment for CCP2 when Configuration bit CCP2MX is set.
2: Alternate assignment for CCP2 when Configuration bit CCP2MX is cleared.

© 2010 Microchip Technology Inc.

TABLE 1-3: PIC18F4XK20 PINOUT I/O DESCRIPTIONS (CONTINUED)

Pin Name	Pin Number			Pin Type	Buffer Type	Description
	PDIP	QFN	TQFP			
						PORTE is a bidirectional I/O port
RE0/$\overline{RD}$/AN5	8	25	25			
RE0				I/O	ST	Digital I/O
$\overline{RD}$				I	TTL	Read control for Parallel Slave Port (see related $\overline{WR}$ and $\overline{CS}$ pins)
AN5				I	Analog	Analog input 5, ADC channel 5
RE1/$\overline{WR}$/AN6	9	26	26			
RE1				I/O	ST	Digital I/O
$\overline{WR}$				I	TTL	Write control for Parallel Slave Port (see related $\overline{CS}$ and $\overline{RD}$ pins)
AN6				I	Analog	Analog input 6, ADC channel 6
RE2/$\overline{CS}$/AN7	10	27	27			
RE2				I/O	ST	Digital I/O
$\overline{CS}$				I	TTL	Chip Select control for Parallel Slave Port (see related $\overline{RD}$ and $\overline{WR}$)
AN7				I	Analog	Analog input 7, ADC channel 7
RE3	—	—	—	—	—	See $\overline{MCLR}$/VPP/RE3 pin
VSS	12, 31	6, 30, 31	6, 29	P	—	Ground reference for logic and I/O pins
VDD	11, 32	7, 8, 28, 29	7, 28	P	—	Positive supply for logic and I/O pins
NC	—	13	12,13, 33, 34	—	—	No connect

Legend: TTL = TTL compatible input
CMOS = CMOS compatible input or output
ST = Schmitt Trigger input with CMOS levels
I = Input
O = Output
P = Power

Note 1: Default assignment for CCP2 when Configuration bit CCP2MX is set.
2: Alternate assignment for CCP2 when Configuration bit CCP2MX is cleared.

NOTES:

© 2010 Microchip Technology Inc.

2.0 OSCILLATOR MODULE (WITH FAIL-SAFE CLOCK MONITOR)

2.1 Overview

The Oscillator module has a wide variety of clock sources and selection features that allow it to be used in a wide range of applications while maximizing performance and minimizing power consumption. Figure 2-1 illustrates a block diagram of the Oscillator module.

Clock sources can be configured from external oscillators, quartz crystal resonators, ceramic resonators and Resistor-Capacitor (RC) circuits. In addition, the system clock source can be configured from one of two internal oscillators, with a choice of speeds selectable via software. Additional clock features include:

- Selectable system clock source between external or internal via software.
- Two-Speed Start-up mode, which minimizes latency between external oscillator start-up and code execution.
- Fail-Safe Clock Monitor (FSCM) designed to detect a failure of the external clock source (LP, XT, HS, EC or RC modes) and switch automatically to the internal oscillator.

The Oscillator module can be configured in one of ten primary clock modes.

1. LP — Low-Power Crystal
2. XT — Crystal/Resonator
3. HS — High-Speed Crystal/Resonator
4. HSPLL — High-Speed Crystal/Resonator with PLL enabled
5. RC — External Resistor/Capacitor with FOSC/4 output on RA6
6. RCIO — External Resistor/Capacitor with I/O on RA6
7. INTOSC — Internal Oscillator with FOSC/4 output on RA6 and I/O on RA7
8. INTOSCIO — Internal Oscillator with I/O on RA6 and RA7
9. EC — External Clock with FOSC/4 output
10. ECIO — External Clock with I/O on RA6

Primary Clock modes are selected by the FOSC<3:0> bits of the CONFIG1H Configuration Register. The HFINTOSC and LFINTOSC are factory calibrated high-frequency and low-frequency oscillators, respectively, which are used as the internal clock sources.

FIGURE 2-1: PIC® MCU CLOCK SOURCE BLOCK DIAGRAM

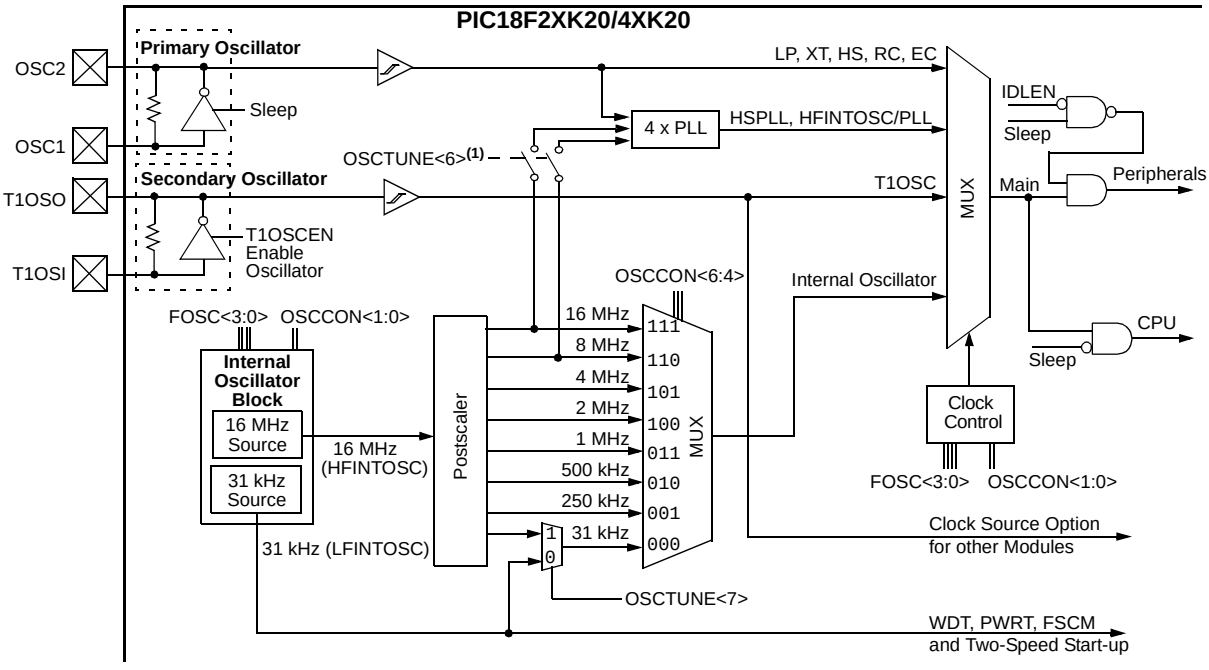

Note 1: Operates only when HFINTOSC is the primary oscillator.

2.2 Oscillator Control

The OSCCON register (Register 2-1) controls several aspects of the device clock's operation, both in full power operation and in power-managed modes.

- Main System Clock Selection (SCS)
- Internal Frequency selection bits (IRCF)
- Clock Status bits (OSTS, IOFS)
- Power management selection (IDLEN)

2.2.1 MAIN SYSTEM CLOCK SELECTION

The System Clock Select bits, SCS<1:0>, select the main clock source. The available clock sources are

- Primary clock defined by the FOSC<3:0> bits of CONFIG1H. The primary clock can be the primary oscillator, an external clock, or the internal oscillator block.
- Secondary clock (Timer1 oscillator)
- Internal oscillator block (HFINTOSC and LFINTOSC).

The clock source changes immediately after one or more of the bits is written to, following a brief clock transition interval. The SCS bits are cleared to select the primary clock on all forms of Reset.

2.2.2 INTERNAL FREQUENCY SELECTION

The Internal Oscillator Frequency Select bits (IRCF<2:0>) select the frequency output of the internal oscillator block. The choices are the LFINTOSC source (31 kHz), the HFINTOSC source (16 MHz) or one of the frequencies derived from the HFINTOSC postscaler (31.25 kHz to 8 MHz). If the internal oscillator block is supplying the main clock, changing the states of these bits will have an immediate change on the internal oscillator's output. On device Resets, the output frequency of the internal oscillator is set to the default frequency of 1 MHz.

2.2.3 LOW FREQUENCY SELECTION

When a nominal output frequency of 31 kHz is selected (IRCF<2:0> = 000), users may choose which internal oscillator acts as the source. This is done with the INTSRC bit of the OSCTUNE register. Setting this bit selects the HFINTOSC as a 31.25 kHz clock source by enabling the divide-by-512 output of the HFINTOSC postscaler. Clearing INTSRC selects LFINTOSC (nominally 31 kHz) as the clock source.

This option allows users to select the tunable and more precise HFINTOSC as a clock source, while maintaining power savings with a very low clock speed. Regardless of the setting of INTSRC, LFINTOSC always remains the clock source for features such as the Watchdog Timer and the Fail-Safe Clock Monitor.

2.2.4 CLOCK STATUS

The OSTS and IOFS bits of the OSCCON register, and the T1RUN bit of the T1CON register, indicate which clock source is currently providing the main clock. The OSTS bit indicates that the Oscillator Start-up Timer has timed out and the primary clock is providing the device clock. The IOFS bit indicates when the internal oscillator block has stabilized and is providing the device clock in HFINTOSC Clock modes. The IOFS and OSTS Status bits will both be set when SCS<1:0> = 00 and HFINTOSC is the primary clock. The T1RUN bit indicates when the Timer1 oscillator is providing the device clock in secondary clock modes. When SCS<1:0> ≠ 00, only one of these three bits will be set at any time. If none of these bits are set, the LFINTOSC is providing the clock or the HFINTOSC has just started and is not yet stable.

2.2.5 POWER MANAGEMENT

The IDLEN bit of the OSCCON register determines if the device goes into Sleep mode or one of the Idle modes when the SLEEP instruction is executed.

The use of the flag and control bits in the OSCCON register is discussed in more detail in **Section 3.0 "Power-Managed Modes"**.

Note 1:	The Timer1 oscillator must be enabled to select the secondary clock source. The Timer1 oscillator is enabled by setting the T1OSCEN bit of the T1CON register. If the Timer1 oscillator is not enabled, then the main oscillator will continue to run from the previously selected source. The source will then switch to the secondary oscillator after the T1OSCEN bit is set.
2:	It is recommended that the Timer1 oscillator be operating and stable before selecting the secondary clock source or a very long delay may occur while the Timer1 oscillator starts.

© 2010 Microchip Technology Inc.

REGISTER 2-1: OSCCON: OSCILLATOR CONTROL REGISTER

R/W-0	R/W-0	R/W-1	R/W-1	R-q	R-0	R/W-0	R/W-0
IDLEN	IRCF2	IRCF1	IRCF0	OSTS(1)	IOFS	SCS1	SCS0
bit 7							bit 0

Legend:			
R = Readable bit	W = Writable bit	U = Unimplemented bit, read as '0'	q = depends on condition
-n = Value at POR	'1' = Bit is set	'0' = Bit is cleared	x = Bit is unknown

bit 7 **IDLEN:** Idle Enable bit
- 1 = Device enters Idle mode on SLEEP instruction
- 0 = Device enters Sleep mode on SLEEP instruction

bit 6-4 **IRCF<2:0>:** Internal Oscillator Frequency Select bits
- 111 = 16 MHz (HFINTOSC drives clock directly)
- 110 = 8 MHz
- 101 = 4 MHz
- 100 = 2 MHz
- 011 = 1 MHz(3)
- 010 = 500 kHz
- 001 = 250 kHz
- 000 = 31 kHz (from either HFINTOSC/512 or LFINTOSC directly)(2)

bit 3 **OSTS:** Oscillator Start-up Time-out Status bit(1)
- 1 = Device is running from the clock defined by FOSC<2:0> of the CONFIG1 register
- 0 = Device is running from the internal oscillator (HFINTOSC or LFINTOSC)

bit 2 **IOFS:** HFINTOSC Frequency Stable bit
- 1 = HFINTOSC frequency is stable
- 0 = HFINTOSC frequency is not stable

bit 1-0 **SCS<1:0>:** System Clock Select bits
- 1x = Internal oscillator block
- 01 = Secondary (Timer1) oscillator
- 00 = Primary clock (determined by CONFIG1H[FOSC<3:0>]).

Note 1: Reset state depends on state of the IESO Configuration bit.
2: Source selected by the INTSRC bit of the OSCTUNE register, see text.
3: Default output frequency of HFINTOSC on Reset.

2.3 Clock Source Modes

Clock Source modes can be classified as external or internal.

- External Clock modes rely on external circuitry for the clock source. Examples are: Clock modules (EC mode), quartz crystal resonators or ceramic resonators (LP, XT and HS modes) and Resistor-Capacitor (RC mode) circuits.
- Internal clock sources are contained internally within the Oscillator block. The Oscillator block has two internal oscillators: the 16 MHz High-Frequency Internal Oscillator (HFINTOSC) and the 31 kHz Low-Frequency Internal Oscillator (LFINTOSC).

The system clock can be selected between external or internal clock sources via the System Clock Select (SCS<1:0>) bits of the OSCCON register. See **Section 2.9 "Clock Switching"** for additional information.

2.4 External Clock Modes

2.4.1 OSCILLATOR START-UP TIMER (OST)

When the Oscillator module is configured for LP, XT or HS modes, the Oscillator Start-up Timer (OST) counts 1024 oscillations from OSC1. This occurs following a Power-on Reset (POR) and when the Power-up Timer (PWRT) has expired (if configured), or a wake-up from Sleep. During this time, the program counter does not increment and program execution is suspended. The OST ensures that the oscillator circuit, using a quartz crystal resonator or ceramic resonator, has started and is providing a stable system clock to the Oscillator module. When switching between clock sources, a delay is required to allow the new clock to stabilize. These oscillator delays are shown in Table 2-1.

In order to minimize latency between external oscillator start-up and code execution, the Two-Speed Clock Start-up mode can be selected (see **Section 2.10 "Two-Speed Clock Start-up Mode"**).

TABLE 2-1: OSCILLATOR DELAY EXAMPLES

Switch From	Switch To	Frequency	Oscillator Delay
Sleep/POR	LFINTOSC HFINTOSC	31 kHz 250 kHz to 16 MHz	Oscillator Warm-Up Delay (TWARM)
Sleep/POR	EC, RC	DC – 64 MHz	2 instruction cycles
LFINTOSC (31 kHz)	EC, RC	DC – 64 MHz	1 cycle of each
Sleep/POR	LP, XT, HS	32 kHz to 40 MHz	1024 Clock Cycles (OST)
Sleep/POR	HSPLL	32 MHz to 64 MHz	1024 Clock Cycles (OST) + 2 ms
LFINTOSC (31 kHz)	HFINTOSC	250 kHz to 16 MHz	1 μs (approx.)

2.4.2 EC MODE

The External Clock (EC) mode allows an externally generated logic level as the system clock source. When operating in this mode, an external clock source is connected to the OSC1 input and the OSC2 is available for general purpose I/O. Figure 2-2 shows the pin connections for EC mode.

The Oscillator Start-up Timer (OST) is disabled when EC mode is selected. Therefore, there is no delay in operation after a Power-on Reset (POR) or wake-up from Sleep. Because the PIC® MCU design is fully static, stopping the external clock input will have the effect of halting the device while leaving all data intact. Upon restarting the external clock, the device will resume operation as if no time had elapsed.

FIGURE 2-2: EXTERNAL CLOCK (EC) MODE OPERATION

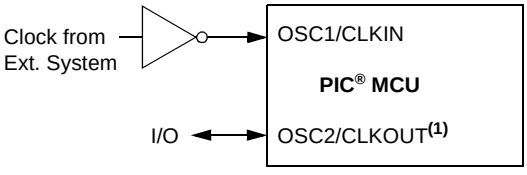

Note 1: Alternate pin functions are listed in **Section 1.0 "Device Overview"**.

© 2010 Microchip Technology Inc.

2.4.3 LP, XT, HS MODES

The LP, XT and HS modes support the use of quartz crystal resonators or ceramic resonators connected to OSC1 and OSC2 (Figure 2-3). The mode selects a low, medium or high gain setting of the internal inverter-amplifier to support various resonator types and speed.

LP Oscillator mode selects the lowest gain setting of the internal inverter-amplifier. LP mode current consumption is the least of the three modes. This mode is best suited to drive resonators with a low drive level specification, for example, tuning fork type crystals.

XT Oscillator mode selects the intermediate gain setting of the internal inverter-amplifier. XT mode current consumption is the medium of the three modes. This mode is best suited to drive resonators with a medium drive level specification.

HS Oscillator mode selects the highest gain setting of the internal inverter-amplifier. HS mode current consumption is the highest of the three modes. This mode is best suited for resonators that require a high drive setting.

Figure 2-3 and Figure 2-4 show typical circuits for quartz crystal and ceramic resonators, respectively.

FIGURE 2-3: QUARTZ CRYSTAL OPERATION (LP, XT OR HS MODE)

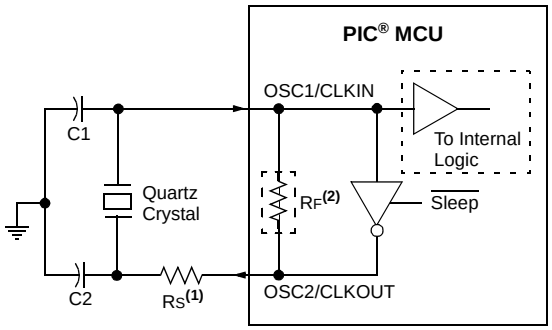

Note 1: A series resistor (RS) may be required for quartz crystals with low drive level.

2: The value of RF varies with the Oscillator mode selected (typically between 2 MΩ to 10 MΩ).

Note 1: Quartz crystal characteristics vary according to type, package and manufacturer. The user should consult the manufacturer data sheets for specifications and recommended application.

2: Always verify oscillator performance over the VDD and temperature range that is expected for the application.

3: For oscillator design assistance, reference the following Microchip Applications Notes:

- AN826, "*Crystal Oscillator Basics and Crystal Selection for rfPIC® and PIC® Devices*" (DS00826)
- AN849, "*Basic PIC® Oscillator Design*" (DS00849)
- AN943, "*Practical PIC® Oscillator Analysis and Design*" (DS00943)
- AN949, "*Making Your Oscillator Work*" (DS00949)

FIGURE 2-4: CERAMIC RESONATOR OPERATION (XT OR HS MODE)

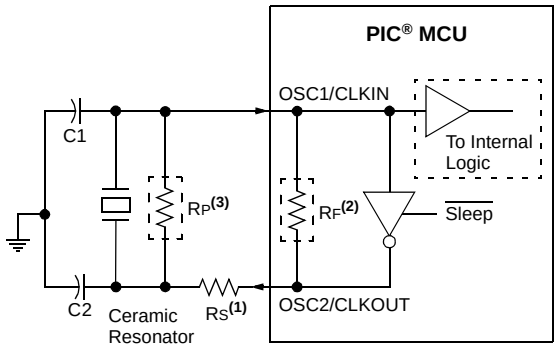

Note 1: A series resistor (RS) may be required for ceramic resonators with low drive level.

2: The value of RF varies with the Oscillator mode selected (typically between 2 MΩ to 10 MΩ).

3: An additional parallel feedback resistor (RP) may be required for proper ceramic resonator operation.

2.4.4 EXTERNAL RC MODES

The external Resistor-Capacitor (RC) modes support the use of an external RC circuit. This allows the designer maximum flexibility in frequency choice while keeping costs to a minimum when clock accuracy is not required. There are two modes: RC and RCIO.

2.4.4.1 RC Mode

In RC mode, the RC circuit connects to OSC1. OSC2/CLKOUT outputs the RC oscillator frequency divided by 4. This signal may be used to provide a clock for external circuitry, synchronization, calibration, test or other application requirements. Figure 2-5 shows the external RC mode connections.

FIGURE 2-5: EXTERNAL RC MODES

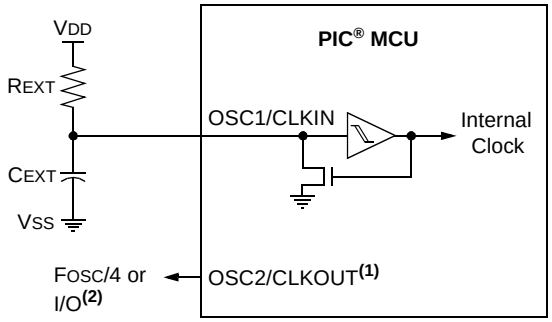

Recommended values: 10 kΩ ≤ REXT ≤ 100 kΩ
CEXT > 20 pF

Note 1: Alternate pin functions are listed in **Section 1.0 "Device Overview"**.
2: Output depends upon RC or RCIO clock mode.

2.4.4.2 RCIO Mode

In RCIO mode, the RC circuit is connected to OSC1. OSC2 becomes an additional general purpose I/O pin.

The RC oscillator frequency is a function of the supply voltage, the resistor (REXT) and capacitor (CEXT) values and the operating temperature. Other factors affecting the oscillator frequency are:

- input threshold voltage variation
- component tolerances
- packaging variations in capacitance

The user also needs to take into account variation due to tolerance of external RC components used.

2.5 Internal Clock Modes

The Oscillator module has two independent, internal oscillators that can be configured or selected as the system clock source.

1. The **HFINTOSC** (High-Frequency Internal Oscillator) is factory calibrated and operates at 16 MHz. The frequency of the HFINTOSC can be user-adjusted via software using the OSCTUNE register (Register 2-2).
2. The **LFINTOSC** (Low-Frequency Internal Oscillator) operates at 31 kHz.

The system clock speed can be selected via software using the Internal Oscillator Frequency Select bits IRCF<2:0> of the OSCCON register.

The system clock can be selected between external or internal clock sources via the System Clock Selection (SCS<1:0>) bits of the OSCCON register. See **Section 2.9 "Clock Switching"** for more information.

2.5.1 INTOSC AND INTOSCIO MODES

The INTOSC and INTOSCIO modes configure the internal oscillators as the primary clock source. The FOSC<3:0> bits in the CONFIG1H Configuration register determine which mode is selected. See **Section 23.0 "Special Features of the CPU"** for more information.

In **INTOSC** mode, OSC1/CLKIN is available for general purpose I/O. OSC2/CLKOUT outputs the selected internal oscillator frequency divided by 4. The CLKOUT signal may be used to provide a clock for external circuitry, synchronization, calibration, test or other application requirements.

In **INTOSCIO** mode, OSC1/CLKIN and OSC2/CLKOUT are available for general purpose I/O.

2.5.2 HFINTOSC

The output of the HFINTOSC connects to a postscaler and multiplexer (see Figure 2-1). One of eight frequencies can be selected via software using the IRCF<2:0> bits of the OSCCON register. See **Section 2.5.4 "Frequency Select Bits (IRCF)"** for more information.

The HFINTOSC is enabled when:

- SCS1 = 1 and IRCF<2:0> ≠ 000
- SCS1 = 1 and IRCF<2:0> = 000 and INTSRC = 1
- IESO bit of CONFIG1H = 1 enabling Two-Speed Start-up.
- FCMEM bit of CONFIG1H = 1 enabling Two-Speed Start-up and Fail-Safe mode.
- FOSC<3:0> of CONFIG1H selects the internal oscillator as the primary clock

The HF Internal Oscillator (IOFS) bit of the OSCCON register indicates whether the HFINTOSC is stable or not.

© 2010 Microchip Technology Inc.

2.5.2.1 OSCTUNE Register

The HFINTOSC is factory calibrated but can be adjusted in software by writing to the TUN<5:0> bits of the OSCTUNE register (Register 2-2).

The default value of the TUN<5:0> is '000000'. The value is a 6-bit two's complement number.

When the OSCTUNE register is modified, the HFINTOSC frequency will begin shifting to the new frequency. Code execution continues during this shift. There is no indication that the shift has occurred.

OSCTUNE does not affect the LFINTOSC frequency. Operation of features that depend on the LFINTOSC clock source frequency, such as the Power-up Timer (PWRT), Watchdog Timer (WDT), Fail-Safe Clock Monitor (FSCM) and peripherals, are *not* affected by the change in frequency.

The OSCTUNE register also implements the INTSRC and PLLEN bits, which control certain features of the internal oscillator block.

The INTSRC bit allows users to select which internal oscillator provides the clock source when the 31 kHz frequency option is selected. This is covered in greater detail in **Section 2.2.3 "Low Frequency Selection"**.

The PLLEN bit controls the operation of the frequency multiplier, PLL, in internal oscillator modes. For more details about the function of the PLLEN bit see **Section 2.6.2 "PLL in HFINTOSC Modes"**

REGISTER 2-2: OSCTUNE: OSCILLATOR TUNING REGISTER

R/W-0	R/W-0	R/W-0	R/W-0	R/W-0	R/W-0	R/W-0	R/W-0
INTSRC	PLLEN(1)	TUN5	TUN4	TUN3	TUN2	TUN1	TUN0
bit 7							bit 0

Legend:			
R = Readable bit	W = Writable bit	U = Unimplemented bit, read as '0'	
-n = Value at POR	'1' = Bit is set	'0' = Bit is cleared	x = Bit is unknown

bit 7 **INTSRC:** Internal Oscillator Low-Frequency Source Select bit
1 = 31.25 kHz device clock derived from 16 MHz HFINTOSC source (divide-by-512 enabled)
0 = 31 kHz device clock derived directly from LFINTOSC internal oscillator

bit 6 **PLLEN:** Frequency Multiplier PLL for HFINTOSC Enable bit(1)
1 = PLL enabled for HFINTOSC (8 MHz and 16 MHz only)
0 = PLL disabled

bit 5-0 **TUN<5:0>:** Frequency Tuning bits
011111 = Maximum frequency
011110 =
• • •
000001 =
000000 = Oscillator module is running at the factory calibrated frequency.
111111 =
• • •
100000 = Minimum frequency

Note 1: The PLLEN bit is active only when the HFINTOSC is the primary clock source (FOSC<2:0> = 100X) and the selected frequency is 8 MHz or 16 MHz. Otherwise, the PLLEN bit is unavailable and always reads '0'.

2.5.3 LFINTOSC

The Low-Frequency Internal Oscillator (LFINTOSC) is a 31 kHz internal clock source.

The output of the LFINTOSC connects to internal oscillator block frequency selection multiplexer (see Figure 2-1). Select 31 kHz, via software, using the IRCF<2:0> bits of the OSCCON register and the INTSRC bit of the OSCTUNE register. See **Section 2.5.4 "Frequency Select Bits (IRCF)"** for more information. The LFINTOSC is also the frequency for the Power-up Timer (PWRT), Watchdog Timer (WDT) and Fail-Safe Clock Monitor (FSCM).

The LFINTOSC is enabled when any of the following are enabled:

- IRCF<2:0> bits of the OSCCON register = 000 and INTSRC bit of the OSCTUNE register = 0
- Power-up Timer (PWRT)
- Watchdog Timer (WDT)
- Fail-Safe Clock Monitor (FSCM)

2.5.4 FREQUENCY SELECT BITS (IRCF)

The output of the 16 MHz HFINTOSC and 31 kHz LFINTOSC connects to a postscaler and multiplexer (see Figure 2-1). The Internal Oscillator Frequency Select bits IRCF<2:0> of the OSCCON register select the output frequency of the internal oscillators. One of eight frequencies can be selected via software:

- 16 MHz
- 8 MHz
- 4 MHz
- 2 MHz
- 1 MHz (Default after Reset)
- 500 kHz
- 250 kHz
- 31 kHz (LFINTOSC or HFINTOSC/512)

Note:	Following any Reset, the IRCF<2:0> bits of the OSCCON register are set to '011' and the frequency selection is set to 1 MHz. The user can modify the IRCF bits to select a different frequency.

2.5.5 HFINTOSC FREQUENCY DRIFT

The factory calibrates the internal oscillator block output (HFINTOSC) for 16 MHz. However, this frequency may drift as VDD or temperature changes, which can affect the controller operation in a variety of ways. It is possible to adjust the HFINTOSC frequency by modifying the value of the TUN<5:0> bits in the OSCTUNE register. This has no effect on the LFINTOSC clock source frequency.

Tuning the HFINTOSC source requires knowing when to make the adjustment, in which direction it should be made and in some cases, how large a change is needed. Three possible compensation techniques are discussed in the following sections, however other techniques may be used.

2.5.5.1 Compensating with the USART

An adjustment may be required when the USART begins to generate framing errors or receives data with errors while in Asynchronous mode. Framing errors indicate that the device clock frequency is too high; to adjust for this, decrement the value in OSCTUNE to reduce the clock frequency. On the other hand, errors in data may suggest that the clock speed is too low; to compensate, increment OSCTUNE to increase the clock frequency.

2.5.5.2 Compensating with the Timers

This technique compares device clock speed to some reference clock. Two timers may be used; one timer is clocked by the peripheral clock, while the other is clocked by a fixed reference source, such as the Timer1 oscillator.

Both timers are cleared, but the timer clocked by the reference generates interrupts. When an interrupt occurs, the internally clocked timer is read and both timers are cleared. If the internally clocked timer value is greater than expected, then the internal oscillator block is running too fast. To adjust for this, decrement the OSCTUNE register.

2.5.5.3 Compensating with the CCP Module in Capture Mode

A CCP module can use free running Timer1 (or Timer3), clocked by the internal oscillator block and an external event with a known period (i.e., AC power frequency). The time of the first event is captured in the CCPRxH:CCPRxL registers and is recorded for use later. When the second event causes a capture, the time of the first event is subtracted from the time of the second event. Since the period of the external event is known, the time difference between events can be calculated.

If the measured time is much greater than the calculated time, the internal oscillator block is running too fast; to compensate, decrement the OSCTUNE register. If the measured time is much less than the calculated time, the internal oscillator block is running too slow; to compensate, increment the OSCTUNE register.

© 2010 Microchip Technology Inc.

2.6 PLL Frequency Multiplier

A Phase Locked Loop (PLL) circuit is provided as an option for users who wish to use a lower frequency oscillator circuit or to clock the device up to its highest rated frequency from the crystal oscillator. This may be useful for customers who are concerned with EMI due to high-frequency crystals or users who require higher clock speeds from an internal oscillator. There are three conditions when the PLL can be used:

- When the primary clock is HSPLL
- When the primary clock is HFINTOSC and the selected frequency is 16 MHz
- When the primary clock is HFINTOSC and the selected frequency is 8 MHz

2.6.1 HSPLL OSCILLATOR MODE

The HSPLL mode makes use of the HS mode oscillator for frequencies up to 16 MHz. A PLL then multiplies the oscillator output frequency by 4 to produce an internal clock frequency up to 64 MHz. The PLLEN bit of the OSCTUNE register is active only when the HFINTOSC is the primary clock and is not available in HSPLL oscillator mode.

The PLL is only available to the primary oscillator when the FOSC<3:0> Configuration bits are programmed for HSPLL mode (= 0110).

FIGURE 2-6: PLL BLOCK DIAGRAM (HS MODE)

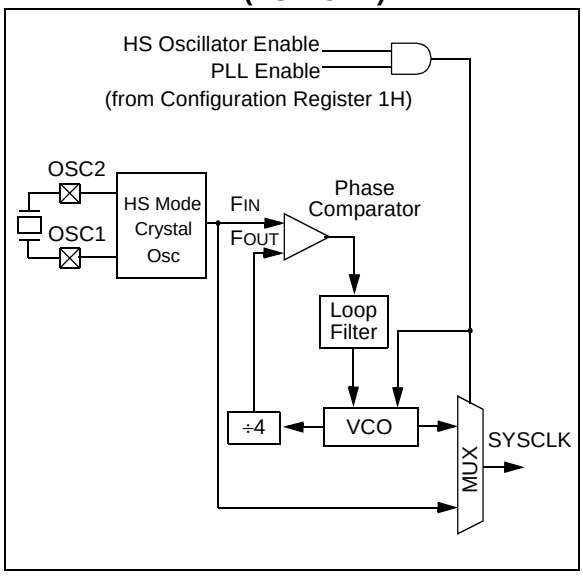

2.6.2 PLL IN HFINTOSC MODES

The 4x frequency multiplier can be used with the internal oscillator block to produce faster device clock speeds than are normally possible with an internal oscillator. When enabled, the PLL produces a clock speed of up to 64 MHz.

Unlike HSPLL mode, the PLL is controlled through software. The PLLEN control bit of the OSCTUNE register is used to enable or disable the PLL operation when the HFINTOSC is used.

The PLL is available when the device is configured to use the internal oscillator block as its primary clock source (FOSC<3:0> = 1001 or 1000). Additionally, the PLL will only function when the selected output frequency is either 8 MHz or 16 MHz (OSCCON<6:4> = 111 or 110). If both of these conditions are not met, the PLL is disabled.

The PLLEN control bit is only functional in those internal oscillator modes where the PLL is available. In all other modes, it is forced to '0' and is effectively unavailable.

2.7 Effects of Power-Managed Modes on the Various Clock Sources

For more information about the modes discussed in this section see **Section 3.0 "Power-Managed Modes"**. A quick reference list is also available in Table 3-1.

When PRI_IDLE mode is selected, the designated primary oscillator continues to run without interruption. For all other power-managed modes, the oscillator using the OSC1 pin is disabled. The OSC1 pin (and OSC2 pin, if used by the oscillator) will stop oscillating.

In secondary clock modes (SEC_RUN and SEC_IDLE), the Timer1 oscillator is operating and providing the device clock. The Timer1 oscillator may also run in all power-managed modes if required to clock Timer1 or Timer3.

In internal oscillator modes (INTOSC_RUN and INTOSC_IDLE), the internal oscillator block provides the device clock source. The 31 kHz LFINTOSC output can be used directly to provide the clock and may be enabled to support various special features, regardless of the power-managed mode (see **Section 23.2 "Watchdog Timer (WDT)"**, **Section 2.10 "Two-Speed Clock Start-up Mode"** and **Section 2.11 "Fail-Safe Clock Monitor"** for more information on WDT, Fail-Safe Clock Monitor and Two-Speed Start-up). The HFINTOSC output at 16 MHz may be used directly to clock the device or may be divided down by the post-scaler. The HFINTOSC output is disabled if the clock is provided directly from the LFINTOSC output.

If the Sleep mode is selected, all clock sources are stopped. Since all the transistor switching currents have been stopped, Sleep mode achieves the lowest current consumption of the device (only leakage currents).

Enabling any on-chip feature that will operate during Sleep will increase the current consumed during Sleep. The LFINTOSC is required to support WDT operation. The Timer1 oscillator may be operating to support a real-time clock. Other features may be operating that do not require a device clock source (i.e., SSP slave, PSP, INTn pins and others). Peripherals that may add significant current consumption are listed in **Section 26.8 "DC Characteristics".**

2.8 Power-up Delays

Power-up delays are controlled by two timers, so that no external Reset circuitry is required for most applications. The delays ensure that the device is kept in Reset until the device power supply is stable under normal circumstances and the primary clock is operating and stable. For additional information on power-up delays, see **Section 4.5 "Device Reset Timers"**.

The first timer is the Power-up Timer (PWRT), which provides a fixed delay on power-up (parameter 33, Table 26-10). It is enabled by clearing (= 0) the PWRTEN Configuration bit.

The second timer is the Oscillator Start-up Timer (OST), intended to keep the chip in Reset until the crystal oscillator is stable (LP, XT and HS modes). The OST does this by counting 1024 oscillator cycles before allowing the oscillator to clock the device.

When the HSPLL Oscillator mode is selected, the device is kept in Reset for an additional 2 ms, following the HS mode OST delay, so the PLL can lock to the incoming clock frequency.

There is a delay of interval TCSD (parameter 38, Table 26-10), following POR, while the controller becomes ready to execute instructions. This delay runs concurrently with any other delays. This may be the only delay that occurs when any of the EC, RC or INTIO modes are used as the primary clock source.

When the HFINTOSC is selected as the primary clock, the main system clock can be delayed until the HFINTOSC is stable. This is user selectable by the HFOFST bit of the CONFIG3H Configuration register. When the HFOFST bit is cleared the main system clock is delayed until the HFINTOSC is stable. When the HFOFST bit is set the main system clock starts immediately. In either case the IOFS bit of the OSCCON register can be read to determine whether the HFINTOSC is operating and stable.

TABLE 2-2: OSC1 AND OSC2 PIN STATES IN SLEEP MODE

OSC Mode	OSC1 Pin	OSC2 Pin
RC, INTOSC	Floating, external resistor should pull high	At logic low (clock/4 output)
RCIO	Floating, external resistor should pull high	Configured as PORTA, bit 6
INTOSCIO	Configured as PORTA, bit 7	Configured as PORTA, bit 6
ECIO	Floating, pulled by external clock	Configured as PORTA, bit 6
EC	Floating, pulled by external clock	At logic low (clock/4 output)
LP, XT, HS and HSPLL	Feedback inverter disabled at quiescent voltage level	Feedback inverter disabled at quiescent voltage level

Note: See Table 4-2 in **Section 4.0 "Reset"** for time-outs due to Sleep and $\overline{\text{MCLR}}$ Reset.

© 2010 Microchip Technology Inc.

2.9 Clock Switching

The system clock source can be switched between external and internal clock sources via software using the System Clock Select (SCS<1:0>) bits of the OSCCON register.

PIC18F2XK20/4XK20 devices contain circuitry to prevent clock “glitches” when switching between clock sources. A short pause in the device clock occurs during the clock switch. The length of this pause is the sum of two cycles of the old clock source and three to four cycles of the new clock source. This formula assumes that the new clock source is stable.

Clock transitions are discussed in greater detail in **Section 3.1.2 “Entering Power-Managed Modes”**.

2.9.1 SYSTEM CLOCK SELECT (SCS<1:0>) BITS

The System Clock Select (SCS<1:0>) bits of the OSCCON register select the system clock source that is used for the CPU and peripherals.

- When SCS<1:0> = 00, the system clock source is determined by configuration of the FOSC<2:0> bits in the CONFIG1H Configuration register.
- When SCS<1:0> = 10, the system clock source is chosen by the internal oscillator frequency selected by the INTSRC bit of the OSCTUNE register and the IRCF<2:0> bits of the OSCCON register.
- When SCS<1:0> = 01, the system clock source is the 32.768 kHz secondary oscillator shared with Timer1.

After a Reset, the SCS<1:0> bits of the OSCCON register are always cleared.

Note:	Any automatic clock switch, which may occur from Two-Speed Start-up or Fail-Safe Clock Monitor, does not update the SCS<1:0> bits of the OSCCON register. The user can monitor the T1RUN bit of the T1CON register and the IOFS and OSTS bits of the OSCCON register to determine the current system clock source.

2.9.2 OSCILLATOR START-UP TIME-OUT STATUS (OSTS) BIT

The Oscillator Start-up Time-out Status (OSTS) bit of the OSCCON register indicates whether the system clock is running from the external clock source, as defined by the FOSC<3:0> bits in the CONFIG1H Configuration register, or from the internal clock source. In particular, when the primary oscillator is the source of the primary clock, OSTS indicates that the Oscillator Start-up Timer (OST) has timed out for LP, XT or HS modes.

2.9.3 CLOCK SWITCH TIMING

When switching between one oscillator and another, the new oscillator may not be operating which saves power (see Figure 2-7). If this is the case, there is a delay after the SCS<1:0> bits of the OSCCON register are modified before the frequency change takes place. The OSTS and IOFS bits of the OSCCON register will reflect the current active status of the external and HFINTOSC oscillators. The timing of a frequency selection is as follows:

1. SCS<1:0> bits of the OSCCON register are modified.
2. The old clock continues to operate until the new clock is ready.
3. Clock switch circuitry waits for two consecutive rising edges of the old clock after the new clock ready signal goes true.
4. The system clock is held low starting at the next falling edge of the old clock.
5. Clock switch circuitry waits for an additional two rising edges of the new clock.
6. On the next falling edge of the new clock the low hold on the system clock is released and new clock is switched in as the system clock.
7. Clock switch is complete.

See Figure 2-1 for more details.

If the HFINTOSC is the source of both the old and new frequency, there is no start-up delay before the new frequency is active. This is because the old and new frequencies are derived from the HFINTOSC via the postscaler and multiplexer.

Start-up delay specifications are located in **Section 26.0 “Electrical Characteristics”**, under AC Specifications (Oscillator Module).

2.10 Two-Speed Clock Start-up Mode

Two-Speed Start-up mode provides additional power savings by minimizing the latency between external oscillator start-up and code execution. In applications that make heavy use of the Sleep mode, Two-Speed Start-up will remove the external oscillator start-up time from the time spent awake and can reduce the overall power consumption of the device.

This mode allows the application to wake-up from Sleep, perform a few instructions using the HFINTOSC as the clock source and go back to Sleep without waiting for the primary oscillator to become stable.

Note:	Executing a SLEEP instruction will abort the oscillator start-up time and will cause the OSTS bit of the OSCCON register to remain clear.

When the Oscillator module is configured for LP, XT or HS modes, the Oscillator Start-up Timer (OST) is enabled (see **Section 2.4.1 "Oscillator Start-up Timer (OST)"**). The OST will suspend program execution until 1024 oscillations are counted. Two-Speed Start-up mode minimizes the delay in code execution by operating from the internal oscillator as the OST is counting. When the OST count reaches 1024 and the OSTS bit of the OSCCON register is set, program execution switches to the external oscillator.

2.10.1 TWO-SPEED START-UP MODE CONFIGURATION

Two-Speed Start-up mode is enabled when all of the following settings are configured as noted:

- Two-Speed Start-up mode is enabled by setting the IESO of the CONFIG1H Configuration register is set. Fail-Safe mode (FCMEM = 1) also enables two-speed by default.
- SCS<1:0> (of the OSCCON register) = 00.
- FOSC<2:0> bits of the CONFIG1H Configuration register are configured for LP, XT or HS mode.

Two-Speed Start-up mode becomes active after:

- Power-on Reset (POR) and, if enabled, after Power-up Timer (PWRT) has expired, or
- Wake-up from Sleep.

If the external clock oscillator is configured to be anything other than LP, XT or HS mode, then Two-Speed Start-up is disabled. This is because the external clock oscillator does not require any stabilization time after POR or an exit from Sleep.

2.10.2 TWO-SPEED START-UP SEQUENCE

1. Wake-up from Power-on Reset or Sleep.
2. Instructions begin executing by the internal oscillator at the frequency set in the IRCF<2:0> bits of the OSCCON register.
3. OST enabled to count 1024 external clock cycles.
4. OST timed out. External clock is ready.
5. OSTS is set.
6. Clock switch finishes according to **FIGURE 2-7: "Clock Switch Timing"**

2.10.3 CHECKING TWO-SPEED CLOCK STATUS

Checking the state of the OSTS bit of the OSCCON register will confirm if the microcontroller is running from the external clock source, as defined by the FOSC<2:0> bits in CONFIG1H Configuration register, or the internal oscillator. OSTS = 0 when the external oscillator is not ready, which indicates that the system is running from the internal oscillator.

© 2010 Microchip Technology Inc.

FIGURE 2-7: CLOCK SWITCH TIMING

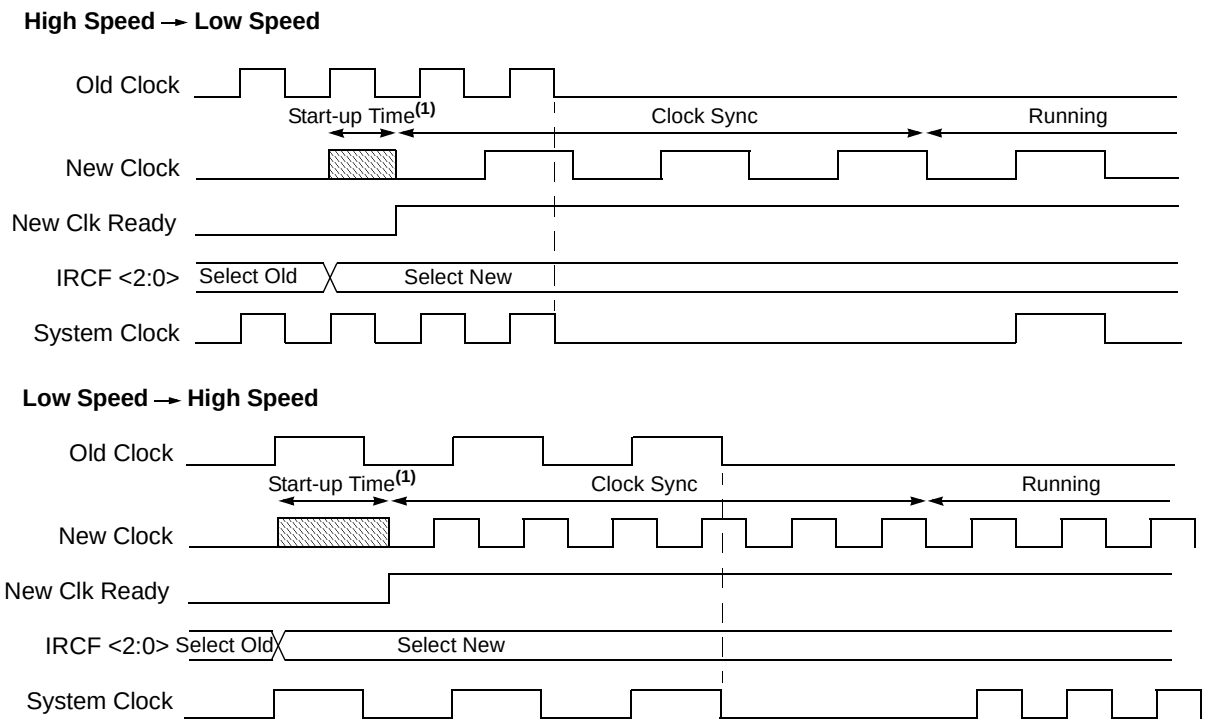

Note 1: Start-up time includes TOST (1024 TOSC) for external clocks, plus TPLL (approx. 2 ms) for HSPLL mode.

2.11 Fail-Safe Clock Monitor

The Fail-Safe Clock Monitor (FSCM) allows the device to continue operating should the external oscillator fail. The FSCM can detect oscillator failure any time after the Oscillator Start-up Timer (OST) has expired. The FSCM is enabled by setting the FCMEN bit in the CONFIG1H Configuration register. The FSCM is applicable to all external oscillator modes (LP, XT, HS, EC, RC and RCIO).

FIGURE 2-8: FSCM BLOCK DIAGRAM

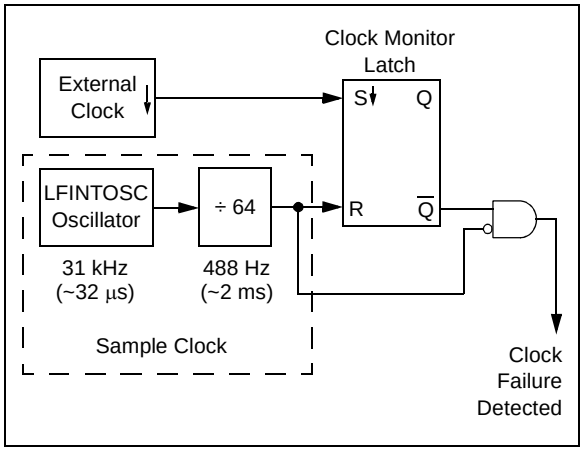

2.11.1 FAIL-SAFE DETECTION

The FSCM module detects a failed oscillator by comparing the external oscillator to the FSCM sample clock. The sample clock is generated by dividing the LFINTOSC by 64. See Figure 2-8. Inside the fail detector block is a latch. The external clock sets the latch on each falling edge of the external clock. The sample clock clears the latch on each rising edge of the sample clock. A failure is detected when an entire half-cycle of the sample clock elapses before the primary clock goes low.

2.11.2 FAIL-SAFE OPERATION

When the external clock fails, the FSCM switches the device clock to an internal clock source and sets the bit flag OSCFIF of the PIR2 register. The OSCFIF flag will generate an interrupt if the OSCFIE bit of the PIE2 register is also set. The device firmware can then take steps to mitigate the problems that may arise from a failed clock. The system clock will continue to be sourced from the internal clock source until the device firmware successfully restarts the external oscillator and switches back to external operation. An automatic transition back to the failed clock source will not occur.

The internal clock source chosen by the FSCM is determined by the IRCF<2:0> bits of the OSCCON register. This allows the internal oscillator to be configured before a failure occurs.

2.11.3 FAIL-SAFE CONDITION CLEARING

The Fail-Safe condition is cleared by either one of the following:

- Any Reset
- By toggling the SCS1 bit of the OSCCON register

Both of these conditions restart the OST. While the OST is running, the device continues to operate from the INTOSC selected in OSCCON. When the OST times out, the Fail-Safe condition is cleared and the device automatically switches over to the external clock source. The Fail-Safe condition need not be cleared before the OSCFIF flag is cleared.

2.11.4 RESET OR WAKE-UP FROM SLEEP

The FSCM is designed to detect an oscillator failure after the Oscillator Start-up Timer (OST) has expired. The OST is used after waking up from Sleep and after any type of Reset. The OST is not used with the EC or RC Clock modes so that the FSCM will be active as soon as the Reset or wake-up has completed. When the FSCM is enabled, the Two-Speed Start-up is also enabled. Therefore, the device will always be executing code while the OST is operating.

Note:	Due to the wide range of oscillator start-up times, the Fail-Safe circuit is not active during oscillator start-up (i.e., after exiting Reset or Sleep). After an appropriate amount of time, the user should check the OSTS bit of the OSCCON register to verify the oscillator start-up and that the system clock switchover has successfully completed.

© 2010 Microchip Technology Inc.

FIGURE 2-9: FSCM TIMING DIAGRAM

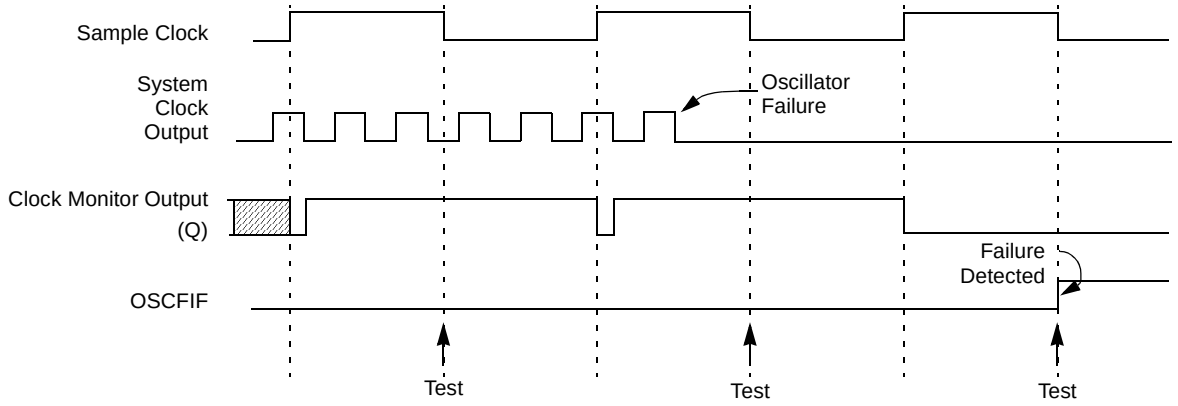

Note: The system clock is normally at a much higher frequency than the sample clock. The relative frequencies in this example have been chosen for clarity.

TABLE 2-3: SUMMARY OF REGISTERS ASSOCIATED WITH CLOCK SOURCES

Name	Bit 7	Bit 6	Bit 5	Bit 4	Bit 3	Bit 2	Bit 1	Bit 0	Value on POR, BOR	Value on all other Resets(1)
CONFIG1H	IESO	FCMEN	—	—	FOSC3	FOSC2	FOSC1	FOSC0	—	—
INTCON	GIE/GIEH	PEIE/GIEL	TMR0IE	INT0IE	RBIE	TMR0IF	INT0IF	RBIF	0000 000x	0000 000x
OSCCON	IDLEN	IRCF2	IRCF1	IRCF0	OSTS	IOFS	SCS1	SCS0	0011 q000	0011 q000
OSCTUNE	INTSRC	PLLEN	TUN5	TUN4	TUN3	TUN2	TUN1	TUN0	0000 0000	000u uuuu
PIE2	OSCFIE	C1IE	C2IE	EEIE	BCLIE	HLVDIE	TMR3IE	CCP2IE	0000 0000	0000 0000
PIR2	OSCFIF	C1IF	C2IF	EEIF	BCLIF	HLVDIF	TMR3IF	CCP2IF	0000 0000	0000 0000
IPR2	OSCFIP	—	—	—	—	—	—	—	1111 1111	1111 1111

Legend: x = unknown, u = unchanged, – = unimplemented locations read as '0'. Shaded cells are not used by oscillators.
Note 1: Other (non Power-up) Resets include $\overline{\text{MCLR}}$ Reset and Watchdog Timer Reset during normal operation.

NOTES:

© 2010 Microchip Technology Inc.

3.0 POWER-MANAGED MODES

PIC18F2XK20/4XK20 devices offer a total of seven operating modes for more efficient power management. These modes provide a variety of options for selective power conservation in applications where resources may be limited (i.e., battery-powered devices).

There are three categories of power-managed modes:

- Run modes
- Idle modes
- Sleep mode

These categories define which portions of the device are clocked and sometimes, what speed. The Run and Idle modes may use any of the three available clock sources (primary, secondary or internal oscillator block); the Sleep mode does not use a clock source.

The power-managed modes include several power-saving features offered on previous PIC® microcontroller devices. One is the clock switching feature which allows the controller to use the Timer1 oscillator in place of the primary oscillator. Also included is the Sleep mode, offered by all PIC® microcontroller devices, where all device clocks are stopped.

3.1 Selecting Power-Managed Modes

Selecting a power-managed mode requires two decisions:

- Whether or not the CPU is to be clocked
- The selection of a clock source

The IDLEN bit of the OSCCON register controls CPU clocking, while the SCS<1:0> bits of the OSCCON register select the clock source. The individual modes, bit settings, clock sources and affected modules are summarized in Table 3-1.

3.1.1 CLOCK SOURCES

The SCS<1:0> bits allow the selection of one of three clock sources for power-managed modes. They are:

- the primary clock, as defined by the FOSC<3:0> Configuration bits
- the secondary clock (the Timer1 oscillator)
- the internal oscillator block

3.1.2 ENTERING POWER-MANAGED MODES

Switching from one power-managed mode to another begins by loading the OSCCON register. The SCS<1:0> bits select the clock source and determine which Run or Idle mode is to be used. Changing these bits causes an immediate switch to the new clock source, assuming that it is running. The switch may also be subject to clock transition delays. These are discussed in **Section 3.1.3 "Clock Transitions and Status Indicators"** and subsequent sections.

Entry to the power-managed Idle or Sleep modes is triggered by the execution of a SLEEP instruction. The actual mode that results depends on the status of the IDLEN bit of the OSCCON register.

Depending on the current mode and the mode being switched to, a change to a power-managed mode does not always require setting all of these bits. Many transitions may be done by changing the oscillator select bits, or changing the IDLEN bit, prior to issuing a SLEEP instruction. If the IDLEN bit is already configured correctly, it may only be necessary to perform a SLEEP instruction to switch to the desired mode.

TABLE 3-1: POWER-MANAGED MODES

Mode	OSCCON Bits		Module Clocking		Available Clock and Oscillator Source
	IDLEN(1)	SCS<1:0>	CPU	Peripherals	
Sleep	0	N/A	Off	Off	None – All clocks are disabled
PRI_RUN	N/A	00	Clocked	Clocked	Primary – LP, XT, HS, HSPLL, RC, EC and Internal Oscillator Block(2). This is the normal full power execution mode.
SEC_RUN	N/A	01	Clocked	Clocked	Secondary – Timer1 Oscillator
RC_RUN	N/A	1x	Clocked	Clocked	Internal Oscillator Block(2)
PRI_IDLE	1	00	Off	Clocked	Primary – LP, XT, HS, HSPLL, RC, EC
SEC_IDLE	1	01	Off	Clocked	Secondary – Timer1 Oscillator
RC_IDLE	1	1x	Off	Clocked	Internal Oscillator Block(2)

Note 1: IDLEN reflects its value when the SLEEP instruction is executed.

2: Includes HFINTOSC and HFINTOSC postscaler, as well as the LFINTOSC source.

3.1.3 CLOCK TRANSITIONS AND STATUS INDICATORS

The length of the transition between clock sources is the sum of:

- Start-up time of the new clock
- Two and one half cycles of the old clock source
- Two and one half cycles of the new clock

Three flag bits indicate the current clock source and its status. They are:

- OSTS (of the OSCCON register)
- IOFS (of the OSCCON register)
- T1RUN (of the T1CON register)

In general, only one of these bits will be set while in a given power-managed mode. Table 3-2 shows the relationship of the flags to the active main system clock source.

TABLE 3-2: SYSTEM CLOCK INDICATORS

OSTS	IOFS	T1RUN	Main System Clock Source
1	0	0	Primary Oscillator
0	1	0	HFINTOSC
0	0	1	Secondary Oscillator
1	1	0	HFINTOSC as primary clock
0	0	0	LFINTOSC or HFINTOSC is not yet stable

.

Note 1:	Executing a SLEEP instruction does not necessarily place the device into Sleep mode. It acts as the trigger to place the controller into either the Sleep mode or one of the Idle modes, depending on the setting of the IDLEN bit.

3.1.4 MULTIPLE FUNCTIONS OF THE SLEEP COMMAND

The power-managed mode that is invoked with the SLEEP instruction is determined by the setting of the IDLEN bit of the OSCCON register at the time the instruction is executed. All clocks stop and minimum power is consumed when SLEEP is executed with the IDLEN bit cleared. The system clock continues to supply a clock to the peripherals but is disconnected from the CPU when SLEEP is executed with the IDLEN bit set.

3.2 Run Modes

In the Run modes, clocks to both the core and peripherals are active. The difference between these modes is the clock source.

3.2.1 PRI_RUN MODE

The PRI_RUN mode is the normal, full power execution mode of the microcontroller. This is also the default mode upon a device Reset, unless Two-Speed Start-up is enabled (see **Section 2.10 “Two-Speed Clock Start-up Mode”** for details). In this mode, the OSTS bit is set. The IOFS bit will be set if the HFINTOSC is the primary clock source and the oscillator is stable (see **Section 2.2 “Oscillator Control”**).

3.2.2 SEC_RUN MODE

The SEC_RUN mode is the mode compatible to the “clock switching” feature offered in other PIC18 devices. In this mode, the CPU and peripherals are clocked from the Timer1 oscillator. This gives users the option of lower power consumption while still using a high accuracy clock source.

SEC_RUN mode is entered by setting the SCS<1:0> bits to ‘01’. When SEC_RUN mode is active all of the following are true:

- The main clock source is switched to the Timer1 oscillator
- Primary oscillator is shut down
- T1RUN bit of the T1CON register is set
- OSTS bit is cleared.

Note:	The Timer1 oscillator should already be running prior to entering SEC_RUN mode. If the T1OSCEN bit is not set when the SCS<1:0> bits are set to ‘01’, entry to SEC_RUN mode will not occur until T1OSCEN bit is set and Timer1 oscillator is ready.

On transitions from SEC_RUN mode to PRI_RUN, the peripherals and CPU continue to be clocked from the Timer1 oscillator while the primary clock is started. When the primary clock becomes ready, a clock switch back to the primary clock occurs (see Figure 2-7). When the clock switch is complete, the T1RUN bit is cleared, the OSTS bit is set and the primary clock is providing the main system clock. The Timer1 oscillator continues to run as long as the T1OSCEN bit is set.

© 2010 Microchip Technology Inc.

3.2.3 RC_RUN MODE

In RC_RUN mode, the CPU and peripherals are clocked from the internal oscillator block using one of the selections from the HFINTOSC multiplexer. In this mode, the primary oscillator is shut down. RC_RUN mode provides the best power conservation of all the Run modes when the LFINTOSC is the main clock source. It works well for user applications which are not highly timing sensitive or do not require high-speed clocks at all times.

If the primary clock source is the internal oscillator block (either LFINTOSC or HFINTOSC), there are no distinguishable differences between PRI_RUN and RC_RUN modes during execution. However, a clock switch delay will occur during entry to and exit from RC_RUN mode. Therefore, if the primary clock source is the internal oscillator block, the use of RC_RUN mode is not recommended. See **2.9.3 "Clock Switch Timing"** for details about clock switching.

RC_RUN mode is entered by setting the SCS1 bit to '1'. The SCS0 bit can be either '0' or '1' but should be '0' to maintain software compatibility with future devices. When the clock source is switched from the primary oscillator to the HFINTOSC multiplexer, the primary oscillator is shut down and the OSTS bit is cleared. The IRCF bits may be modified at any time to immediately change the clock speed.

On transitions from RC_RUN mode to PRI_RUN mode, the device continues to be clocked from the internal oscillator block while the primary oscillator is started. When the primary oscillator becomes ready, a clock switch to the primary clock occurs. When the clock switch is complete, the IOFS bit is cleared, the OSTS bit is set and the primary oscillator is providing the main system clock. The HFINTOSC will continue to run if any of the conditions noted in **Section 2.5.2 "HFINTOSC"** are met. The LFINTOSC source will continue to run if any of the conditions noted in **Section 2.5.3 "LFINTOSC"** are met.

3.3 Sleep Mode

The Power-Managed Sleep mode in the PIC18F2XK20/4XK20 devices is identical to the legacy Sleep mode offered in all other PIC® microcontroller devices. It is entered by clearing the IDLEN bit (the default state on device Reset) and executing the SLEEP instruction. This shuts down the selected oscillator (Figure 3-1). All clock source Status bits are cleared.

Entering the Sleep mode from any other mode does not require a clock switch. This is because no clocks are needed once the controller has entered Sleep. If the WDT is selected, the LFINTOSC source will continue to operate. If the Timer1 oscillator is enabled, it will also continue to run.

When a wake event occurs in Sleep mode (by interrupt, Reset or WDT time-out), the device will not be clocked until the clock source selected by the SCS<1:0> bits becomes ready (see Figure 3-2), or it will be clocked from the internal oscillator block if either the Two-Speed Start-up or the Fail-Safe Clock Monitor are enabled (see **Section 23.0 "Special Features of the CPU"**). In either case, the OSTS bit is set when the primary clock is providing the device clocks. The IDLEN and SCS bits are not affected by the wake-up.

3.4 Idle Modes

The Idle modes allow the controller's CPU to be selectively shut down while the peripherals continue to operate. Selecting a particular Idle mode allows users to further manage power consumption.

If the IDLEN bit is set to a '1' when a SLEEP instruction is executed, the peripherals will be clocked from the clock source selected by the SCS<1:0> bits; however, the CPU will not be clocked. The clock source Status bits are not affected. Setting IDLEN and executing a SLEEP instruction provides a quick method of switching from a given Run mode to its corresponding Idle mode.

If the WDT is selected, the LFINTOSC source will continue to operate. If the Timer1 oscillator is enabled, it will also continue to run.

Since the CPU is not executing instructions, the only exits from any of the Idle modes are by interrupt, WDT time-out, or a Reset. When a wake event occurs, CPU execution is delayed by an interval of TCSD (parameter 38, Table 26-10) while it becomes ready to execute code. When the CPU begins executing code, it resumes with the same clock source for the current Idle mode. For example, when waking from RC_IDLE mode, the internal oscillator block will clock the CPU and peripherals (in other words, RC_RUN mode). The IDLEN and SCS bits are not affected by the wake-up.

While in any Idle mode or the Sleep mode, a WDT time-out will result in a WDT wake-up to the Run mode currently specified by the SCS<1:0> bits.

FIGURE 3-1: TRANSITION TIMING FOR ENTRY TO SLEEP MODE

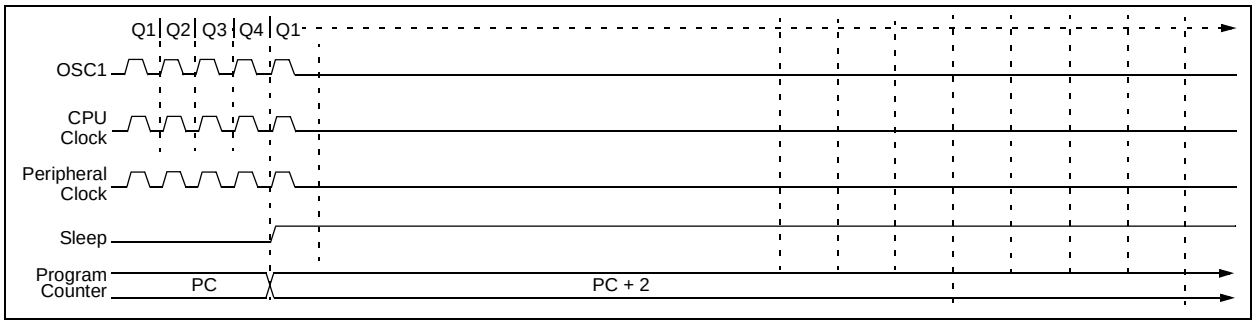

FIGURE 3-2: TRANSITION TIMING FOR WAKE FROM SLEEP (HSPLL)

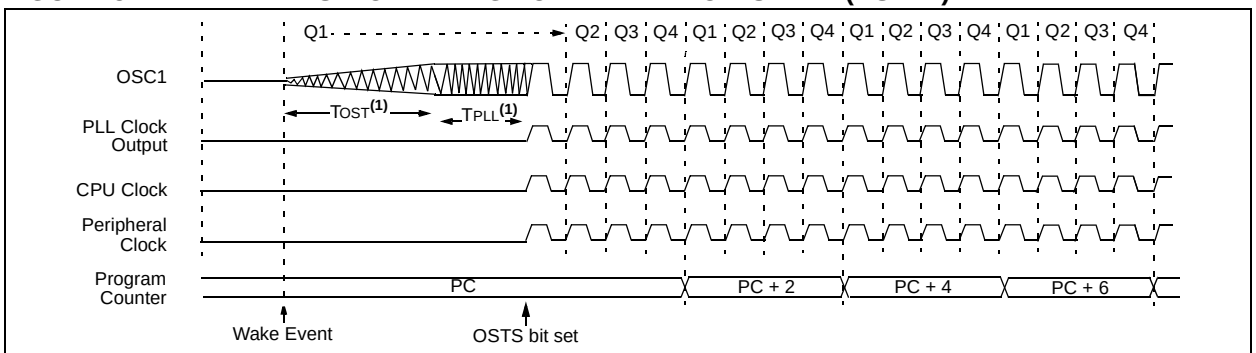

Note 1: TOST = 1024 TOSC; TPLL = 2 ms (approx). These intervals are not shown to scale.

© 2010 Microchip Technology Inc.

3.4.1 PRI_IDLE MODE

This mode is unique among the three low-power Idle modes, in that it does not disable the primary device clock. For timing sensitive applications, this allows for the fastest resumption of device operation with its more accurate primary clock source, since the clock source does not have to “warm-up” or transition from another oscillator.

PRI_IDLE mode is entered from PRI_RUN mode by setting the IDLEN bit and executing a SLEEP instruction. If the device is in another Run mode, set IDLEN first, then clear the SCS bits and execute SLEEP. Although the CPU is disabled, the peripherals continue to be clocked from the primary clock source specified by the FOSC<3:0> Configuration bits. The OSTS bit remains set (see Figure 3.3).

When a wake event occurs, the CPU is clocked from the primary clock source. A delay of interval TCSD is required between the wake event and when code execution starts. This is required to allow the CPU to become ready to execute instructions. After the wake-up, the OSTS bit remains set. The IDLEN and SCS bits are not affected by the wake-up (see Figure 3-4).

3.4.2 SEC_IDLE MODE

In SEC_IDLE mode, the CPU is disabled but the peripherals continue to be clocked from the Timer1 oscillator. This mode is entered from SEC_RUN by setting the IDLEN bit and executing a SLEEP instruction. If the device is in another Run mode, set the IDLEN bit first, then set the SCS<1:0> bits to ‘01’ and execute SLEEP. When the clock source is switched to the Timer1 oscillator, the primary oscillator is shut down, the OSTS bit is cleared and the T1RUN bit is set.

When a wake event occurs, the peripherals continue to be clocked from the Timer1 oscillator. After an interval of TCSD following the wake event, the CPU begins executing code being clocked by the Timer1 oscillator. The IDLEN and SCS bits are not affected by the wake-up; the Timer1 oscillator continues to run (see Figure 3-4).

Note:	The Timer1 oscillator should already be running prior to entering SEC_IDLE mode. If the T1OSCEN bit is not set when the SLEEP instruction is executed, the main system clock will continue to operate in the previously selected mode and the corresponding IDLE mode will be entered (i.e., PRI_IDLE or RC_IDLE).

FIGURE 3-3: TRANSITION TIMING FOR ENTRY TO IDLE MODE

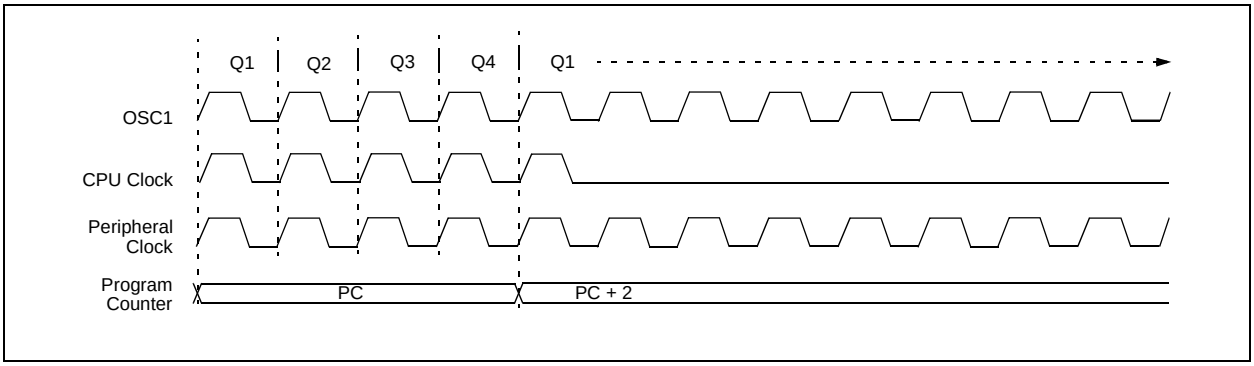

FIGURE 3-4: TRANSITION TIMING FOR WAKE FROM IDLE TO RUN MODE

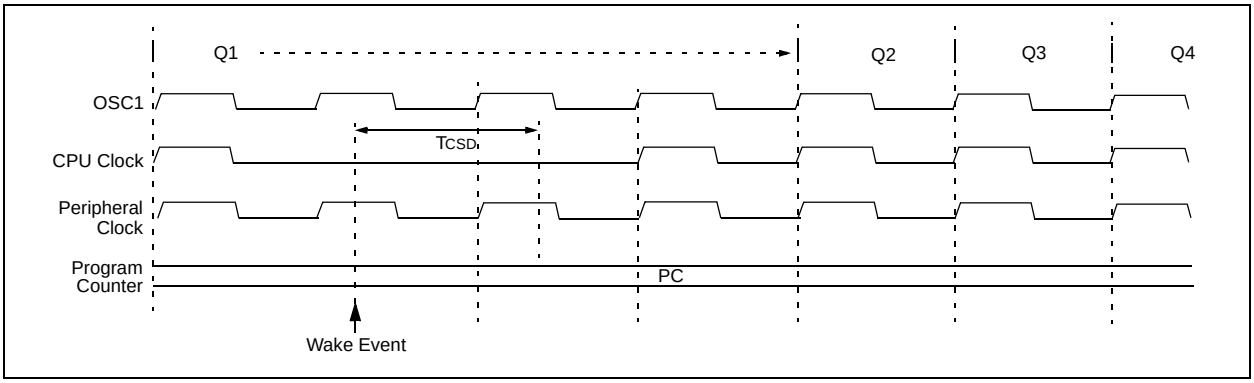

3.4.3 RC_IDLE MODE

In RC_IDLE mode, the CPU is disabled but the peripherals continue to be clocked from the internal oscillator block from the HFINTOSC multiplexer output. This mode allows for controllable power conservation during Idle periods.

From RC_RUN, this mode is entered by setting the IDLEN bit and executing a SLEEP instruction. If the device is in another Run mode, first set IDLEN, then set the SCS1 bit and execute SLEEP. It is recommended that SCS0 also be cleared, although its value is ignored, to maintain software compatibility with future devices. The HFINTOSC multiplexer may be used to select a higher clock frequency by modifying the IRCF bits before executing the SLEEP instruction. When the clock source is switched to the HFINTOSC multiplexer, the primary oscillator is shut down and the OSTS bit is cleared.

If the IRCF bits are set to any non-zero value, or the INTSRC bit is set, the HFINTOSC output is enabled. The IOFS bit becomes set, after the HFINTOSC output becomes stable, after an interval of TIOBST (parameter 39, Table 26-10). Clocks to the peripherals continue while the HFINTOSC source stabilizes. If the IRCF bits were previously at a non-zero value, or INTSRC was set before the SLEEP instruction was executed and the HFINTOSC source was already stable, the IOFS bit will remain set. If the IRCF bits and INTSRC are all clear, the HFINTOSC output will not be enabled, the IOFS bit will remain clear and there will be no indication of the current clock source.

When a wake event occurs, the peripherals continue to be clocked from the HFINTOSC multiplexer output. After a delay of TCSD following the wake event, the CPU begins executing code being clocked by the HFINTOSC multiplexer. The IDLEN and SCS bits are not affected by the wake-up. The LFINTOSC source will continue to run if either the WDT or the Fail-Safe Clock Monitor is enabled.

3.5 Exiting Idle and Sleep Modes

An exit from Sleep mode or any of the Idle modes is triggered by any one of the following:

- an interrupt
- a Reset
- a watchdog time-out

This section discusses the triggers that cause exits from power-managed modes. The clocking subsystem actions are discussed in each of the power-managed modes (see **Section 3.2 “Run Modes”, Section 3.3 “Sleep Mode”** and **Section 3.4 “Idle Modes”**).

3.5.1 EXIT BY INTERRUPT

Any of the available interrupt sources can cause the device to exit from an Idle mode or the Sleep mode to a Run mode. To enable this functionality, an interrupt source must be enabled by setting its enable bit in one of the INTCON or PIE registers. The PEIE bIt must also be set If the desired interrupt enable bit is in a PIE register. The exit sequence is initiated when the corresponding interrupt flag bit is set.

The instruction immediately following the SLEEP instruction is executed on all exits by interrupt from Idle or Sleep modes. Code execution then branches to the interrupt vector if the GIE/GIEH bit of the INTCON register is set, otherwise code execution continues without branching (see **Section 9.0 “Interrupts”**).

A fixed delay of interval TCSD following the wake event is required when leaving Sleep and Idle modes. This delay is required for the CPU to prepare for execution. Instruction execution resumes on the first clock cycle following this delay.

3.5.2 EXIT BY WDT TIME-OUT

A WDT time-out will cause different actions depending on which power-managed mode the device is in when the time-out occurs.

If the device is not executing code (all Idle modes and Sleep mode), the time-out will result in an exit from the power-managed mode (see **Section 3.2 “Run Modes”** and **Section 3.3 “Sleep Mode”**). If the device is executing code (all Run modes), the time-out will result in a WDT Reset (see **Section 23.2 “Watchdog Timer (WDT)”**).

The WDT timer and postscaler are cleared by any one of the following:

- executing a SLEEP instruction
- executing a CLRWDT instruction
- the loss of the currently selected clock source when the Fail-Safe Clock Monitor is enabled
- modifying the IRCF bits in the OSCCON register when the internal oscillator block is the device clock source

3.5.3 EXIT BY RESET

Exiting Sleep and Idle modes by Reset causes code execution to restart at address 0. See **Section 4.0 “Reset”** for more details.

The exit delay time from Reset to the start of code execution depends on both the clock sources before and after the wake-up and the type of oscillator. Exit delays are summarized in Table 3-3.

© 2010 Microchip Technology Inc.

3.5.4 EXIT WITHOUT AN OSCILLATOR START-UP DELAY

Certain exits from power-managed modes do not invoke the OST at all. There are two cases:

- PRI_IDLE mode, where the primary clock source is not stopped and
- the primary clock source is not any of the LP, XT, HS or HSPLL modes.

In these instances, the primary clock source either does not require an oscillator start-up delay since it is already running (PRI_IDLE), or normally does not require an oscillator start-up delay (RC, EC, INTOSC, and INTOSCIO modes). However, a fixed delay of interval TCSD following the wake event is still required when leaving Sleep and Idle modes to allow the CPU to prepare for execution. Instruction execution resumes on the first clock cycle following this delay.

TABLE 3-3: EXIT DELAY ON WAKE-UP BY RESET FROM SLEEP MODE OR ANY IDLE MODE (BY CLOCK SOURCES)

Clock Source before Wake-up	Clock Source after Wake-up	Exit Delay	Clock Ready Status Bit (OSCCON)
Primary Device Clock (PRI_IDLE mode)	LP, XT, HS	T_{CSD}(1)	OSTS
	HSPLL		
	EC, RC		
	HFINTOSC(2)		IOFS
T1OSC or LFINTOSC(1)	LP, XT, HS	T_{OST}(3)	OSTS
	HSPLL	$T_{OST} + t_{PLL}$(3)	
	EC, RC	T_{CSD}(1)	
	HFINTOSC(1)	T_{IOBST}(4)	IOFS
HFINTOSC(2)	LP, XT, HS	T_{OST}(4)	OSTS
	HSPLL	$T_{OST} + t_{PLL}$(3)	
	EC, RC	T_{CSD}(1)	
	HFINTOSC(1)	None	IOFS
None (Sleep mode)	LP, XT, HS	T_{OST}(3)	OSTS
	HSPLL	$T_{OST} + t_{PLL}$(3)	
	EC, RC	T_{CSD}(1)	
	HFINTOSC(1)	T_{IOBST}(4)	IOFS

Note 1: TCSD (parameter 38) is a required delay when waking from Sleep and all Idle modes and runs concurrently with any other required delays (see **Section 3.4 "Idle Modes"**). On Reset, HFINTOSC defaults to 1 MHz.

2: Includes both the HFINTOSC 16 MHz source and postscaler derived frequencies.

3: TOST is the Oscillator Start-up Timer (parameter 32). t_{PLL} is the PLL Lock-out Timer (parameter F12).

4: Execution continues during the HFINTOSC stabilization period, TIOBST (parameter 39).

NOTES:

© 2010 Microchip Technology Inc.

4.0 RESET

The PIC18F2XK20/4XK20 devices differentiate between various kinds of Reset:

a) Power-on Reset (POR)
b) $\overline{\text{MCLR}}$ Reset during normal operation
c) $\overline{\text{MCLR}}$ Reset during power-managed modes
d) Watchdog Timer (WDT) Reset (during execution)
e) Programmable Brown-out Reset (BOR)
f) RESET Instruction
g) Stack Full Reset
h) Stack Underflow Reset

This section discusses Resets generated by $\overline{\text{MCLR}}$, POR and BOR and covers the operation of the various start-up timers. Stack Reset events are covered in **Section 5.1.2.4 "Stack Full and Underflow Resets"**. WDT Resets are covered in **Section 23.2 "Watchdog Timer (WDT)"**.

A simplified block diagram of the On-Chip Reset Circuit is shown in Figure 4-1.

4.1 RCON Register

Device Reset events are tracked through the RCON register (Register 4-1). The lower five bits of the register indicate that a specific Reset event has occurred. In most cases, these bits can only be cleared by the event and must be set by the application after the event. The state of these flag bits, taken together, can be read to indicate the type of Reset that just occurred. This is described in more detail in **Section 4.6 "Reset State of Registers"**.

The RCON register also has control bits for setting interrupt priority (IPEN) and software control of the BOR (SBOREN). Interrupt priority is discussed in **Section 9.0 "Interrupts"**. BOR is covered in **Section 4.4 "Brown-out Reset (BOR)"**.

FIGURE 4-1: SIMPLIFIED BLOCK DIAGRAM OF ON-CHIP RESET CIRCUIT

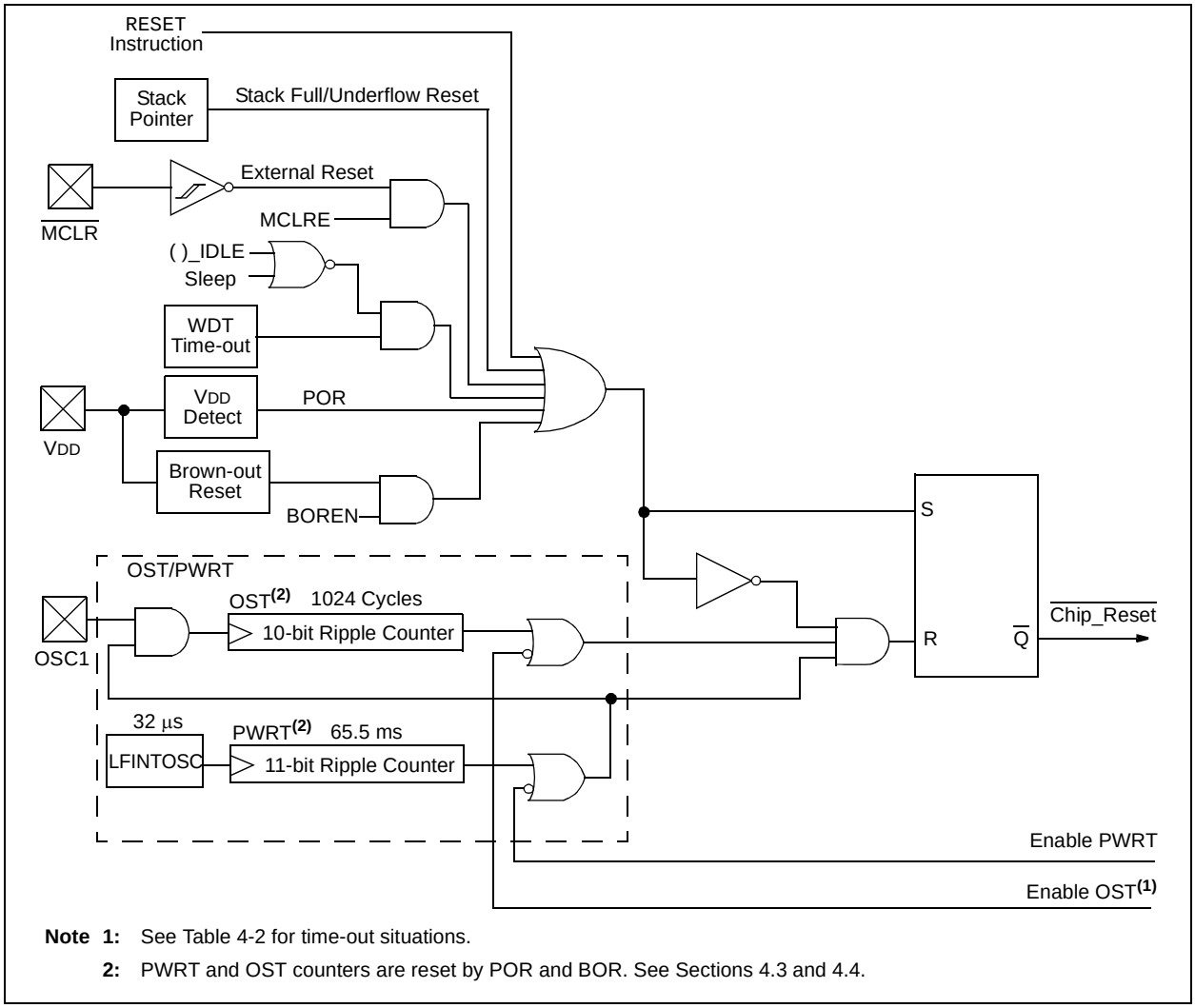

Note 1: See Table 4-2 for time-out situations.

2: PWRT and OST counters are reset by POR and BOR. See Sections 4.3 and 4.4.

REGISTER 4-1: RCON: RESET CONTROL REGISTER

R/W-0	R/W-1	U-0	R/W-1	R-1	R-1	R/W-0	R/W-0
IPEN	SBOREN(1)	—	$\overline{RI}$	$\overline{TO}$	$\overline{PD}$	$\overline{POR}$(2)	$\overline{BOR}$
bit 7							bit 0

Legend:			
R = Readable bit	W = Writable bit	U = Unimplemented bit, read as '0'	
-n = Value at POR	'1' = Bit is set	'0' = Bit is cleared	x = Bit is unknown

bit 7 **IPEN:** Interrupt Priority Enable bit
1 = Enable priority levels on interrupts
0 = Disable priority levels on interrupts (PIC16CXXX Compatibility mode)

bit 6 **SBOREN:** BOR Software Enable bit(1)
If BOREN<1:0> = 01:
1 = BOR is enabled
0 = BOR is disabled
If BOREN<1:0> = 00, 10 or 11:
Bit is disabled and read as '0'.

bit 5 **Unimplemented:** Read as '0'

bit 4 **$\overline{RI}$:** RESET Instruction Flag bit
1 = The RESET instruction was not executed (set by firmware or Power-on Reset)
0 = The RESET instruction was executed causing a device Reset (must be set in firmware after a code-executed Reset occurs)

bit 3 **$\overline{TO}$:** Watchdog Time-out Flag bit
1 = Set by power-up, CLRWDT instruction or SLEEP instruction
0 = A WDT time-out occurred

bit 2 **$\overline{PD}$:** Power-down Detection Flag bit
1 = Set by power-up or by the CLRWDT instruction
0 = Set by execution of the SLEEP instruction

bit 1 **$\overline{POR}$:** Power-on Reset Status bit(2)
1 = No Power-on Reset occurred
0 = A Power-on Reset occurred (must be set in software after a Power-on Reset occurs)

bit 0 **$\overline{BOR}$:** Brown-out Reset Status bit(3)
1 = A Brown-out Reset has not occurred (set by firmware only)
0 = A Brown-out Reset occurred (must be set by firmware after a POR or Brown-out Reset occurs)

Note 1: When CONFIG2L[2:1] = 01, then the SBOREN Reset state is '1'; otherwise, it is '0'.
2: The actual Reset value of $\overline{POR}$ is determined by the type of device Reset. See the notes following this register and **Section 4.6 "Reset State of Registers"** for additional information.
3: See Table 4-3.

Note 1: Brown-out Reset is indicated when $\overline{BOR}$ is '0' and POR is '1' (assuming that both $\overline{POR}$ and $\overline{BOR}$ were set to '1' by firmware immediately after POR).
2: It is recommended that the $\overline{POR}$ bit be set after a Power-on Reset has been detected so that subsequent Power-on Resets may be detected.

© 2010 Microchip Technology Inc.

4.2 Master Clear ($\overline{MCLR}$)

The $\overline{MCLR}$ pin provides a method for triggering an external Reset of the device. A Reset is generated by holding the pin low. These devices have a noise filter in the $\overline{MCLR}$ Reset path which detects and ignores small pulses.

The $\overline{MCLR}$ pin is not driven low by any internal Resets, including the WDT.

In PIC18F2XK20/4XK20 devices, the $\overline{MCLR}$ input can be disabled with the MCLRE Configuration bit. When $\overline{MCLR}$ is disabled, the pin becomes a digital input. See **Section 10.6 "PORTE, TRISE and LATE Registers"** for more information.

4.3 Power-on Reset (POR)

A Power-on Reset pulse is generated on-chip whenever VDD rises above a certain threshold. This allows the device to start in the initialized state when VDD is adequate for operation.

To take advantage of the POR circuitry, tie the $\overline{MCLR}$ pin through a resistor to VDD. This will eliminate external RC components usually needed to create a Power-on Reset delay. A minimum rise rate for VDD is specified (parameter D004). For a slow rise time, see Figure 4-2.

When the device starts normal operation (i.e., exits the Reset condition), device operating parameters (voltage, frequency, temperature, etc.) must be met to ensure proper operation. If these conditions are not met, the device must be held in Reset until the operating conditions are met.

POR events are captured by the $\overline{POR}$ bit of the RCON register. The state of the bit is set to '0' whenever a POR occurs; it does not change for any other Reset event. $\overline{POR}$ is not reset to '1' by any hardware event. To capture multiple events, the user must manually set the bit to '1' by software following any POR.

FIGURE 4-2: EXTERNAL POWER-ON RESET CIRCUIT (FOR SLOW VDD POWER-UP)

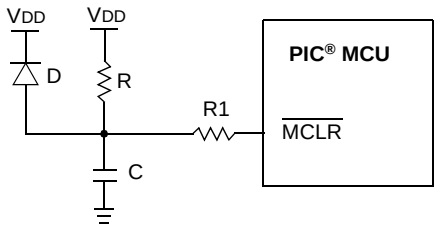

Note 1: External Power-on Reset circuit is required only if the VDD power-up slope is too slow. The diode D helps discharge the capacitor quickly when VDD powers down.

2: 15 kΩ < R < 40 kΩ is recommended to make sure that the voltage drop across R does not violate the device's electrical specification.

3: R1 ≥ 1 kΩ will limit any current flowing into $\overline{MCLR}$ from external capacitor C, in the event of $\overline{MCLR}$/VPP pin breakdown, due to Electrostatic Discharge (ESD) or Electrical Overstress (EOS).

4.4 Brown-out Reset (BOR)

PIC18F2XK20/4XK20 devices implement a BOR circuit that provides the user with a number of configuration and power-saving options. The BOR is controlled by the BORV<1:0> and BOREN<1:0> bits of the CONFIG2L Configuration register. There are a total of four BOR configurations which are summarized in Table 4-1.

The BOR threshold is set by the BORV<1:0> bits. If BOR is enabled (any values of BOREN<1:0>, except '00'), any drop of V_{DD} below V_{BOR} (parameter D005) for greater than T_{BOR} (parameter 35) will reset the device. A Reset may or may not occur if V_{DD} falls below V_{BOR} for less than T_{BOR}. The chip will remain in Brown-out Reset until V_{DD} rises above V_{BOR}.

If the Power-up Timer is enabled, it will be invoked after V_{DD} rises above V_{BOR}; it then will keep the chip in Reset for an additional time delay, T_{PWRT} (parameter 33). If V_{DD} drops below V_{BOR} while the Power-up Timer is running, the chip will go back into a Brown-out Reset and the Power-up Timer will be initialized. Once V_{DD} rises above V_{BOR}, the Power-up Timer will execute the additional time delay.

BOR and the Power-on Timer (PWRT) are independently configured. Enabling BOR Reset does not automatically enable the PWRT.

The BOR circuit has an output that feeds into the POR circuit and rearms the POR within the operating range of the BOR. This early rearming of the POR ensures that the device will remain in Reset in the event that V_{DD} falls below the operating range of the BOR circuitry.

4.4.1 DETECTING BOR

When BOR is enabled, the $\overline{BOR}$ bit always resets to '0' on any BOR or POR event. This makes it difficult to determine if a BOR event has occurred just by reading the state of $\overline{BOR}$ alone. A more reliable method is to simultaneously check the state of both $\overline{POR}$ and $\overline{BOR}$. This assumes that the $\overline{POR}$ and $\overline{BOR}$ bits are reset to '1' by software immediately after any POR event. If $\overline{BOR}$ is '0' while $\overline{POR}$ is '1', it can be reliably assumed that a BOR event has occurred.

4.4.2 SOFTWARE ENABLED BOR

When BOREN<1:0> = 01, the BOR can be enabled or disabled by the user in software. This is done with the SBOREN control bit of the RCON register. Setting SBOREN enables the BOR to function as previously described. Clearing SBOREN disables the BOR entirely. The SBOREN bit operates only in this mode; otherwise it is read as '0'.

Placing the BOR under software control gives the user the additional flexibility of tailoring the application to its environment without having to reprogram the device to change BOR configuration. It also allows the user to tailor device power consumption in software by eliminating the incremental current that the BOR consumes. While the BOR current is typically very small, it may have some impact in low-power applications.

Note:	Even when BOR is under software control, the BOR Reset voltage level is still set by the BORV<1:0> Configuration bits. It cannot be changed by software.

4.4.3 DISABLING BOR IN SLEEP MODE

When BOREN<1:0> = 10, the BOR remains under hardware control and operates as previously described. Whenever the device enters Sleep mode, however, the BOR is automatically disabled. When the device returns to any other operating mode, BOR is automatically re-enabled.

This mode allows for applications to recover from brown-out situations, while actively executing code, when the device requires BOR protection the most. At the same time, it saves additional power in Sleep mode by eliminating the small incremental BOR current.

4.4.4 MINIMUM BOR ENABLE TIME

Enabling the BOR also enables the Fixed Voltage Reference (FVR) when no other peripheral requiring the FVR is active. The BOR becomes active only after the FVR stabilizes. Therefore, to ensure BOR protection, the FVR settling time must be considered when enabling the BOR in software or when the BOR is automatically enabled after waking from Sleep. If the BOR is disabled, in software or by reentering Sleep before the FVR stabilizes, the BOR circuit will not sense a BOR condition. The FVRST bit of the CVRCON2 register can be used to determine FVR stability.

TABLE 4-1: BOR CONFIGURATIONS

BOR Configuration		Status of SBOREN (RCON<6>)	BOR Operation
BOREN1	BOREN0		
0	0	Unavailable	BOR disabled; must be enabled by reprogramming the Configuration bits.
0	1	Available	BOR enabled by software; operation controlled by SBOREN.
1	0	Unavailable	BOR enabled by hardware in Run and Idle modes, disabled during Sleep mode.
1	1	Unavailable	BOR enabled by hardware; must be disabled by reprogramming the Configuration bits.

© 2010 Microchip Technology Inc.

4.5 Device Reset Timers

PIC18F2XK20/4XK20 devices incorporate three separate on-chip timers that help regulate the Power-on Reset process. Their main function is to ensure that the device clock is stable before code is executed. These timers are:

- Power-up Timer (PWRT)
- Oscillator Start-up Timer (OST)
- PLL Lock Time-out

4.5.1 POWER-UP TIMER (PWRT)

The Power-up Timer (PWRT) of PIC18F2XK20/4XK20 devices is an 11-bit counter which uses the LFINTOSC source as the clock input. This yields an approximate time interval of 2048 x 32 μs = 65.6 ms. While the PWRT is counting, the device is held in Reset.

The power-up time delay depends on the LFINTOSC clock and will vary from chip-to-chip due to temperature and process variation. See DC parameter 33 for details.

The PWRT is enabled by clearing the $\overline{\text{PWRTEN}}$ Configuration bit.

4.5.2 OSCILLATOR START-UP TIMER (OST)

The Oscillator Start-up Timer (OST) provides a 1024 oscillator cycle (from OSC1 input) delay after the PWRT delay is over (parameter 33). This ensures that the crystal oscillator or resonator has started and stabilized.

The OST time-out is invoked only for XT, LP, HS and HSPLL modes and only on Power-on Reset, or on exit from all power-managed modes that stop the external oscillator.

4.5.3 PLL LOCK TIME-OUT

With the PLL enabled in its PLL mode, the time-out sequence following a Power-on Reset is slightly different from other oscillator modes. A separate timer is used to provide a fixed time-out that is sufficient for the PLL to lock to the main oscillator frequency. This PLL lock time-out (TPLL) is typically 2 ms and follows the oscillator start-up time-out.

4.5.4 TIME-OUT SEQUENCE

On power-up, the time-out sequence is as follows:

1. After the POR pulse has cleared, PWRT time-out is invoked (if enabled).
2. Then, the OST is activated.

The total time-out will vary based on oscillator configuration and the status of the PWRT. Figure 4-3, Figure 4-4, Figure 4-5, Figure 4-6 and Figure 4-7 all depict time-out sequences on power-up, with the Power-up Timer enabled and the device operating in HS Oscillator mode. Figures 4-3 through 4-6 also apply to devices operating in XT or LP modes. For devices in RC mode and with the PWRT disabled, on the other hand, there will be no time-out at all.

Since the time-outs occur from the POR pulse, if $\overline{\text{MCLR}}$ is kept low long enough, all time-outs will expire, after which, bringing $\overline{\text{MCLR}}$ high will allow program execution to begin immediately (Figure 4-5). This is useful for testing purposes or to synchronize more than one PIC18FXXK20 device operating in parallel.

TABLE 4-2: TIME-OUT IN VARIOUS SITUATIONS

Oscillator Configuration	Power-up(2) and Brown-out		Exit from Power-Managed Mode
	$\overline{\text{PWRTEN}}$ = 0	$\overline{\text{PWRTEN}}$ = 1	
HSPLL	66 ms(1) + 1024 TOSC + 2 ms(2)	1024 TOSC + 2 ms(2)	1024 TOSC + 2 ms(2)
HS, XT, LP	66 ms(1) + 1024 TOSC	1024 TOSC	1024 TOSC
EC, ECIO	66 ms(1)	—	—
RC, RCIO	66 ms(1)	—	—
INTIO1, INTIO2	66 ms(1)	—	—

Note 1: 66 ms (65.5 ms) is the nominal Power-up Timer (PWRT) delay.
2: 2 ms is the nominal time required for the PLL to lock.

FIGURE 4-3: TIME-OUT SEQUENCE ON POWER-UP ($\overline{\text{MCLR}}$ TIED TO V_{DD}, V_{DD} RISE < T_{PWRT})

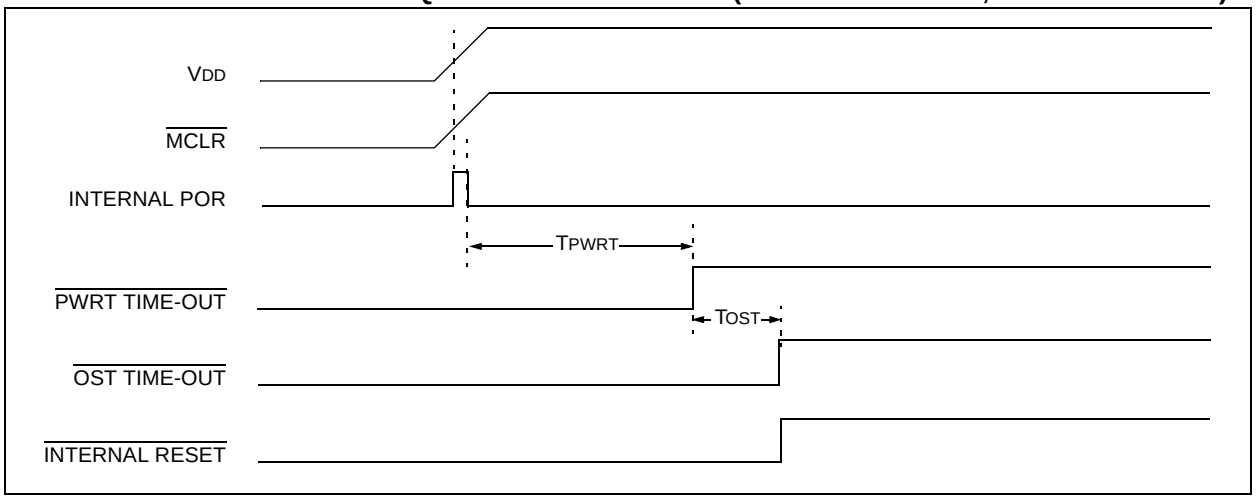

FIGURE 4-4: TIME-OUT SEQUENCE ON POWER-UP ($\overline{\text{MCLR}}$ NOT TIED TO V_{DD}): CASE 1

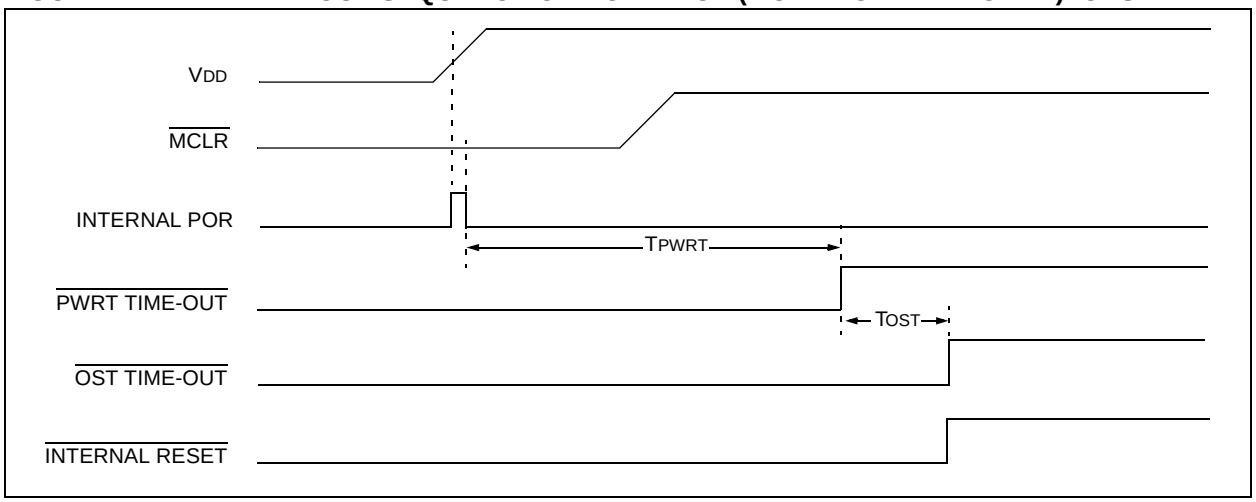

FIGURE 4-5: TIME-OUT SEQUENCE ON POWER-UP ($\overline{\text{MCLR}}$ NOT TIED TO V_{DD}): CASE 2

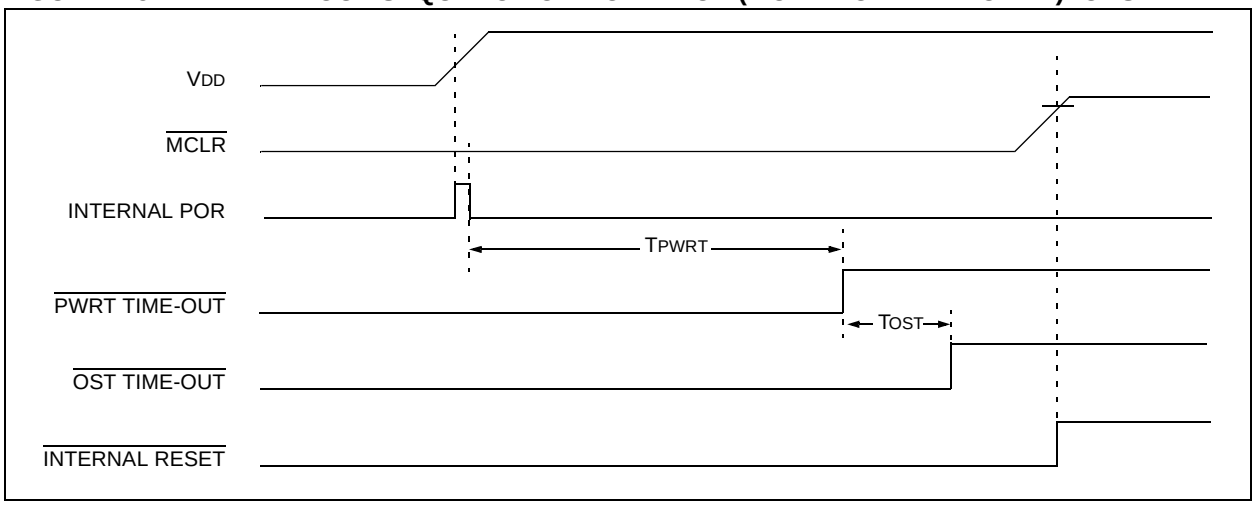

© 2010 Microchip Technology Inc.

FIGURE 4-6: SLOW RISE TIME ($\overline{MCLR}$ TIED TO V_{DD}, V_{DD} RISE > T_{PWRT})

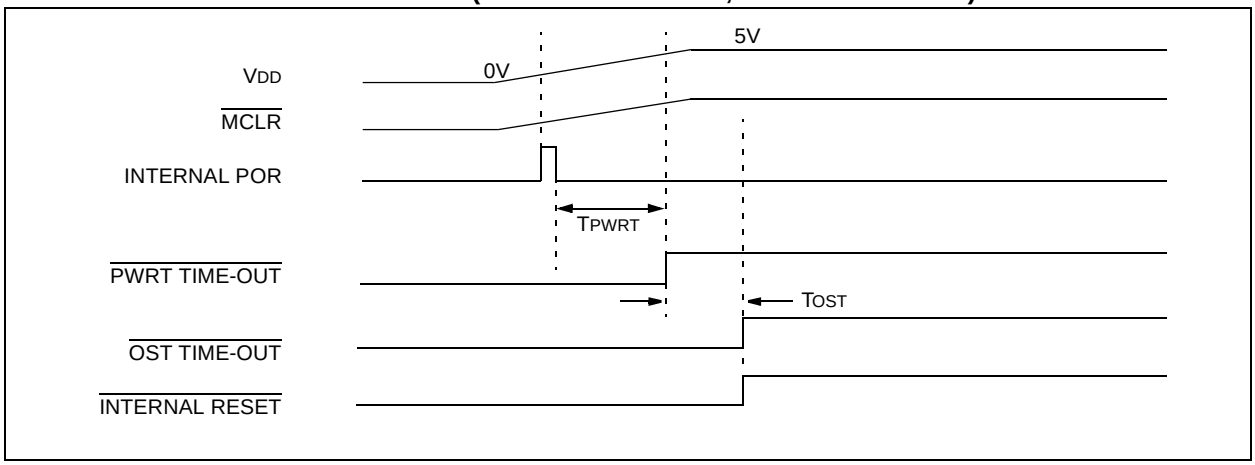

FIGURE 4-7: TIME-OUT SEQUENCE ON POR W/PLL ENABLED ($\overline{MCLR}$ TIED TO V_{DD})

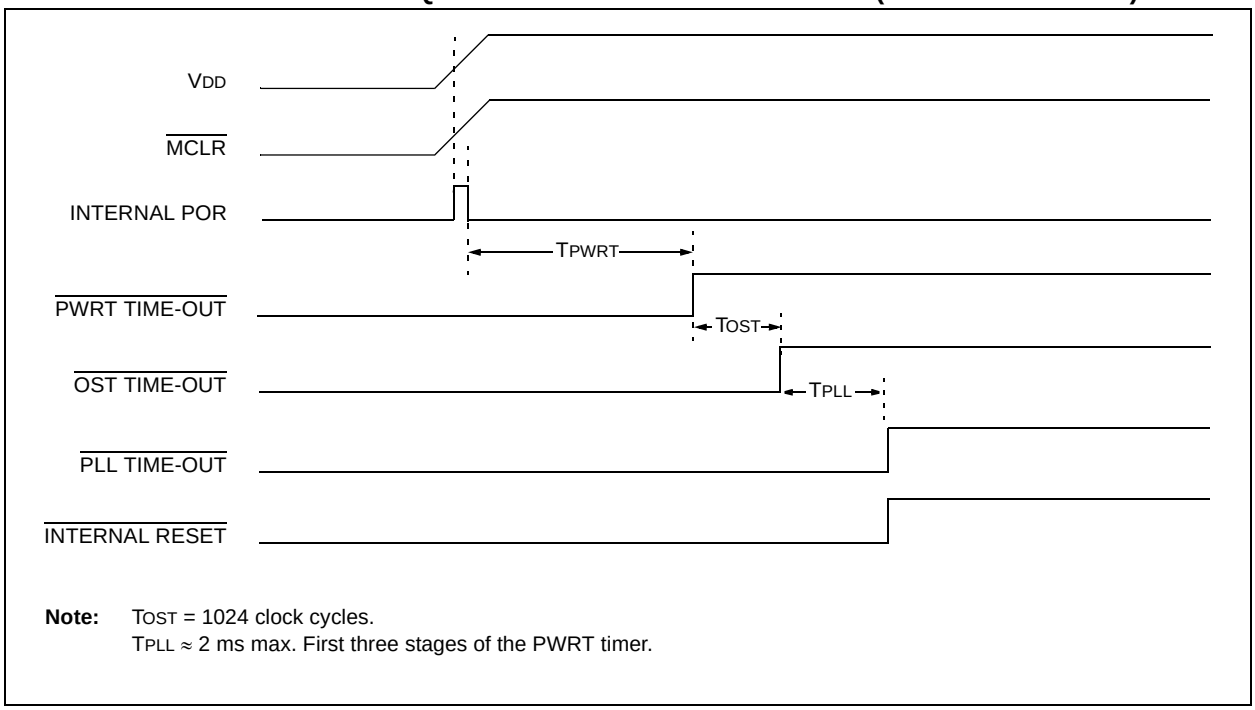

Note: T_{OST} = 1024 clock cycles.
$T_{PLL} \approx$ 2 ms max. First three stages of the PWRT timer.

4.6 Reset State of Registers

Some registers are unaffected by a Reset. Their status is unknown on POR and unchanged by all other Resets. All other registers are forced to a “Reset state” depending on the type of Reset that occurred.

Most registers are not affected by a WDT wake-up, since this is viewed as the resumption of normal operation. Status bits from the RCON register, $\overline{RI}$, $\overline{TO}$, $\overline{PD}$, $\overline{POR}$ and $\overline{BOR}$, are set or cleared differently in different Reset situations, as indicated in Table 4-3. These bits are used by software to determine the nature of the Reset.

Table 4-4 describes the Reset states for all of the Special Function Registers. These are categorized by Power-on and Brown-out Resets, Master Clear and WDT Resets and WDT wake-ups.

TABLE 4-3: STATUS BITS, THEIR SIGNIFICANCE AND THE INITIALIZATION CONDITION FOR RCON REGISTER

Condition	Program Counter	RCON Register						STKPTR Register	
		SBOREN	$\overline{RI}$	$\overline{TO}$	$\overline{PD}$	$\overline{POR}$	$\overline{BOR}$	STKFUL	STKUNF
Power-on Reset	0000h	1	1	1	1	0	0	0	0
RESET Instruction	0000h	u(2)	0	u	u	u	u	u	u
Brown-out Reset	0000h	u(2)	1	1	1	u	0	u	u
$\overline{MCLR}$ during Power-Managed Run Modes	0000h	u(2)	u	1	u	u	u	u	u
$\overline{MCLR}$ during Power-Managed Idle Modes and Sleep Mode	0000h	u(2)	u	1	0	u	u	u	u
WDT Time-out during Full Power or Power-Managed Run Mode	0000h	u(2)	u	0	u	u	u	u	u
$\overline{MCLR}$ during Full Power Execution	0000h	u(2)	u	u	u	u	u	u	u
Stack Full Reset (STVREN = 1)	0000h	u(2)	u	u	u	u	u	1	u
Stack Underflow Reset (STVREN = 1)	0000h	u(2)	u	u	u	u	u	u	1
Stack Underflow Error (not an actual Reset, STVREN = 0)	0000h	u(2)	u	u	u	u	u	u	1
WDT Time-out during Power-Managed Idle or Sleep Modes	PC + 2	u(2)	u	0	0	u	u	u	u
Interrupt Exit from Power-Managed Modes	PC + 2(1)	u(2)	u	u	0	u	u	u	u

Legend: u = unchanged

Note 1: When the wake-up is due to an interrupt and the GIEH or GIEL bits are set, the PC is loaded with the interrupt vector (008h or 0018h).

2: Reset state is ‘1’ for SBOREN and unchanged for all other Resets when software BOR is enabled (BOREN<1:0> Configuration bits = 01). Otherwise, the Reset state is ‘0’.

© 2010 Microchip Technology Inc.

TABLE 4-4: INITIALIZATION CONDITIONS FOR ALL REGISTERS

Register	Applicable Devices		Power-on Reset, Brown-out Reset	$\overline{\text{MCLR}}$ Resets, WDT Reset, RESET Instruction, Stack Resets	Wake-up via WDT or Interrupt
TOSU	PIC18F2XK20	PIC18F4XK20	---0 0000	---0 0000	---0 uuuu(3)
TOSH	PIC18F2XK20	PIC18F4XK20	0000 0000	0000 0000	uuuu uuuu(3)
TOSL	PIC18F2XK20	PIC18F4XK20	0000 0000	0000 0000	uuuu uuuu(3)
STKPTR	PIC18F2XK20	PIC18F4XK20	00-0 0000	uu-0 0000	uu-u uuuu(3)
PCLATU	PIC18F2XK20	PIC18F4XK20	---0 0000	---0 0000	---u uuuu
PCLATH	PIC18F2XK20	PIC18F4XK20	0000 0000	0000 0000	uuuu uuuu
PCL	PIC18F2XK20	PIC18F4XK20	0000 0000	0000 0000	PC + 2(2)
TBLPTRU	PIC18F2XK20	PIC18F4XK20	--00 0000	--00 0000	--uu uuuu
TBLPTRH	PIC18F2XK20	PIC18F4XK20	0000 0000	0000 0000	uuuu uuuu
TBLPTRL	PIC18F2XK20	PIC18F4XK20	0000 0000	0000 0000	uuuu uuuu
TABLAT	PIC18F2XK20	PIC18F4XK20	0000 0000	0000 0000	uuuu uuuu
PRODH	PIC18F2XK20	PIC18F4XK20	xxxx xxxx	uuuu uuuu	uuuu uuuu
PRODL	PIC18F2XK20	PIC18F4XK20	xxxx xxxx	uuuu uuuu	uuuu uuuu
INTCON	PIC18F2XK20	PIC18F4XK20	0000 000x	0000 000u	uuuu uuuu(1)
INTCON2	PIC18F2XK20	PIC18F4XK20	1111 -1-1	1111 -1-1	uuuu -u-u(1)
INTCON3	PIC18F2XK20	PIC18F4XK20	11-0 0-00	11-0 0-00	uu-u u-uu(1)
INDF0	PIC18F2XK20	PIC18F4XK20	N/A	N/A	N/A
POSTINC0	PIC18F2XK20	PIC18F4XK20	N/A	N/A	N/A
POSTDEC0	PIC18F2XK20	PIC18F4XK20	N/A	N/A	N/A
PREINC0	PIC18F2XK20	PIC18F4XK20	N/A	N/A	N/A
PLUSW0	PIC18F2XK20	PIC18F4XK20	N/A	N/A	N/A
FSR0H	PIC18F2XK20	PIC18F4XK20	---- 0000	---- 0000	---- uuuu
FSR0L	PIC18F2XK20	PIC18F4XK20	xxxx xxxx	uuuu uuuu	uuuu uuuu
WREG	PIC18F2XK20	PIC18F4XK20	xxxx xxxx	uuuu uuuu	uuuu uuuu
INDF1	PIC18F2XK20	PIC18F4XK20	N/A	N/A	N/A
POSTINC1	PIC18F2XK20	PIC18F4XK20	N/A	N/A	N/A
POSTDEC1	PIC18F2XK20	PIC18F4XK20	N/A	N/A	N/A
PREINC1	PIC18F2XK20	PIC18F4XK20	N/A	N/A	N/A
PLUSW1	PIC18F2XK20	PIC18F4XK20	N/A	N/A	N/A

Legend: u = unchanged, x = unknown, - = unimplemented bit, read as '0', q = value depends on condition.
Shaded cells indicate conditions do not apply for the designated device.

Note 1: One or more bits in the INTCONx or PIRx registers will be affected (to cause wake-up).

2: When the wake-up is due to an interrupt and the GIEL or GIEH bit is set, the PC is loaded with the interrupt vector (0008h or 0018h).

3: When the wake-up is due to an interrupt and the GIEL or GIEH bit is set, the TOSU, TOSH and TOSL are updated with the current value of the PC. The STKPTR is modified to point to the next location in the hardware stack.

4: See Table 4-3 for Reset value for specific condition.

5: Bits 6 and 7 of PORTA, LATA and TRISA are enabled, depending on the oscillator mode selected. When not enabled as PORTA pins, they are disabled and read '0'.

6: All bits of the ANSELH register initialize to '0' if the PBADEN bit of CONFIG3H is '0'.

TABLE 4-4: INITIALIZATION CONDITIONS FOR ALL REGISTERS (CONTINUED)

Register	Applicable Devices		Power-on Reset, Brown-out Reset	$\overline{\text{MCLR}}$ Resets, WDT Reset, RESET Instruction, Stack Resets	Wake-up via WDT or Interrupt
FSR1H	PIC18F2XK20	PIC18F4XK20	---- 0000	---- 0000	---- uuuu
FSR1L	PIC18F2XK20	PIC18F4XK20	xxxx xxxx	uuuu uuuu	uuuu uuuu
BSR	PIC18F2XK20	PIC18F4XK20	---- 0000	---- 0000	---- uuuu
INDF2	PIC18F2XK20	PIC18F4XK20	N/A	N/A	N/A
POSTINC2	PIC18F2XK20	PIC18F4XK20	N/A	N/A	N/A
POSTDEC2	PIC18F2XK20	PIC18F4XK20	N/A	N/A	N/A
PREINC2	PIC18F2XK20	PIC18F4XK20	N/A	N/A	N/A
PLUSW2	PIC18F2XK20	PIC18F4XK20	N/A	N/A	N/A
FSR2H	PIC18F2XK20	PIC18F4XK20	---- 0000	---- 0000	---- uuuu
FSR2L	PIC18F2XK20	PIC18F4XK20	xxxx xxxx	uuuu uuuu	uuuu uuuu
STATUS	PIC18F2XK20	PIC18F4XK20	---x xxxx	---u uuuu	---u uuuu
TMR0H	PIC18F2XK20	PIC18F4XK20	0000 0000	0000 0000	uuuu uuuu
TMR0L	PIC18F2XK20	PIC18F4XK20	xxxx xxxx	uuuu uuuu	uuuu uuuu
T0CON	PIC18F2XK20	PIC18F4XK20	1111 1111	1111 1111	uuuu uuuu
OSCCON	PIC18F2XK20	PIC18F4XK20	0011 qq00	0011 qq00	uuuu uuuu
HLVDCON	PIC18F2XK20	PIC18F4XK20	0-00 0101	0-00 0101	u-uu uuuu
WDTCON	PIC18F2XK20	PIC18F4XK20	---- ---0	---- ---0	---- ---u
RCON(4)	PIC18F2XK20	PIC18F4XK20	0q-1 11q0	0u-q qquu	uu-u qquu
TMR1H	PIC18F2XK20	PIC18F4XK20	xxxx xxxx	uuuu uuuu	uuuu uuuu
TMR1L	PIC18F2XK20	PIC18F4XK20	xxxx xxxx	uuuu uuuu	uuuu uuuu
T1CON	PIC18F2XK20	PIC18F4XK20	0000 0000	u0uu uuuu	uuuu uuuu
TMR2	PIC18F2XK20	PIC18F4XK20	0000 0000	0000 0000	uuuu uuuu
PR2	PIC18F2XK20	PIC18F4XK20	1111 1111	1111 1111	1111 1111
T2CON	PIC18F2XK20	PIC18F4XK20	-000 0000	-000 0000	-uuu uuuu
SSPBUF	PIC18F2XK20	PIC18F4XK20	xxxx xxxx	uuuu uuuu	uuuu uuuu
SSPADD	PIC18F2XK20	PIC18F4XK20	0000 0000	0000 0000	uuuu uuuu
SSPSTAT	PIC18F2XK20	PIC18F4XK20	0000 0000	0000 0000	uuuu uuuu
SSPCON1	PIC18F2XK20	PIC18F4XK20	0000 0000	0000 0000	uuuu uuuu
SSPCON2	PIC18F2XK20	PIC18F4XK20	0000 0000	0000 0000	uuuu uuuu

Legend: u = unchanged, x = unknown, - = unimplemented bit, read as '0', q = value depends on condition.
Shaded cells indicate conditions do not apply for the designated device.

Note 1: One or more bits in the INTCONx or PIRx registers will be affected (to cause wake-up).

2: When the wake-up is due to an interrupt and the GIEL or GIEH bit is set, the PC is loaded with the interrupt vector (0008h or 0018h).

3: When the wake-up is due to an interrupt and the GIEL or GIEH bit is set, the TOSU, TOSH and TOSL are updated with the current value of the PC. The STKPTR is modified to point to the next location in the hardware stack.

4: See Table 4-3 for Reset value for specific condition.

5: Bits 6 and 7 of PORTA, LATA and TRISA are enabled, depending on the oscillator mode selected. When not enabled as PORTA pins, they are disabled and read '0'.

6: All bits of the ANSELH register initialize to '0' if the PBADEN bit of CONFIG3H is '0'.

© 2010 Microchip Technology Inc.

TABLE 4-4: INITIALIZATION CONDITIONS FOR ALL REGISTERS (CONTINUED)

Register	Applicable Devices		Power-on Reset, Brown-out Reset	$\overline{\text{MCLR}}$ Resets, WDT Reset, RESET Instruction, Stack Resets	Wake-up via WDT or Interrupt
ADRESH	PIC18F2XK20	PIC18F4XK20	xxxx xxxx	uuuu uuuu	uuuu uuuu
ADRESL	PIC18F2XK20	PIC18F4XK20	xxxx xxxx	uuuu uuuu	uuuu uuuu
ADCON0	PIC18F2XK20	PIC18F4XK20	--00 0000	--00 0000	--uu uuuu
ADCON1	PIC18F2XK20	PIC18F4XK20	--00 0qqq	--00 0qqq	--uu uuuu
ADCON2	PIC18F2XK20	PIC18F4XK20	0-00 0000	0-00 0000	u-uu uuuu
CCPR1H	PIC18F2XK20	PIC18F4XK20	xxxx xxxx	uuuu uuuu	uuuu uuuu
CCPR1L	PIC18F2XK20	PIC18F4XK20	xxxx xxxx	uuuu uuuu	uuuu uuuu
CCP1CON	PIC18F2XK20	PIC18F4XK20	0000 0000	0000 0000	uuuu uuuu
CCPR2H	PIC18F2XK20	PIC18F4XK20	xxxx xxxx	uuuu uuuu	uuuu uuuu
CCPR2L	PIC18F2XK20	PIC18F4XK20	xxxx xxxx	uuuu uuuu	uuuu uuuu
CCP2CON	PIC18F2XK20	PIC18F4XK20	--00 0000	--00 0000	--uu uuuu
PSTRCON	PIC18F2XK20	PIC18F4XK20	---0 0001	---0 0001	---u uuuu
BAUDCON	PIC18F2XK20	PIC18F4XK20	0100 0-00	0100 0-00	uuuu u-uu
PWM1CON	PIC18F2XK20	PIC18F4XK20	0000 0000	0000 0000	uuuu uuuu
ECCP1AS	PIC18F2XK20	PIC18F4XK20	0000 0000	0000 0000	uuuu uuuu
CVRCON	PIC18F2XK20	PIC18F4XK20	0000 0000	0000 0000	uuuu uuuu
CVRCON2	PIC18F2XK20	PIC18F4XK20	00-- ----	00-- ----	uu-- ----
TMR3H	PIC18F2XK20	PIC18F4XK20	xxxx xxxx	uuuu uuuu	uuuu uuuu
TMR3L	PIC18F2XK20	PIC18F4XK20	xxxx xxxx	uuuu uuuu	uuuu uuuu
T3CON	PIC18F2XK20	PIC18F4XK20	0000 0000	uuuu uuuu	uuuu uuuu
SPBRGH	PIC18F2XK20	PIC18F4XK20	0000 0000	0000 0000	uuuu uuuu
SPBRG	PIC18F2XK20	PIC18F4XK20	0000 0000	0000 0000	uuuu uuuu
RCREG	PIC18F2XK20	PIC18F4XK20	0000 0000	0000 0000	uuuu uuuu
TXREG	PIC18F2XK20	PIC18F4XK20	0000 0000	0000 0000	uuuu uuuu
TXSTA	PIC18F2XK20	PIC18F4XK20	0000 0010	0000 0010	uuuu uuuu
RCSTA	PIC18F2XK20	PIC18F4XK20	0000 000x	0000 000x	uuuu uuuu
EEADR	PIC18F2XK20	PIC18F4XK20	0000 0000	0000 0000	uuuu uuuu
EEADRH	PIC18F26K20	PIC18F46K20	---- --00	---- --00	---- --uu
EEDATA	PIC18F2XK20	PIC18F4XK20	0000 0000	0000 0000	uuuu uuuu
EECON2	PIC18F2XK20	PIC18F4XK20	0000 0000	0000 0000	0000 0000
EECON1	PIC18F2XK20	PIC18F4XK20	xx-0 x000	uu-0 u000	uu-0 u000

Legend: u = unchanged, x = unknown, - = unimplemented bit, read as '0', q = value depends on condition.
Shaded cells indicate conditions do not apply for the designated device.

Note 1: One or more bits in the INTCONx or PIRx registers will be affected (to cause wake-up).

2: When the wake-up is due to an interrupt and the GIEL or GIEH bit is set, the PC is loaded with the interrupt vector (0008h or 0018h).

3: When the wake-up is due to an interrupt and the GIEL or GIEH bit is set, the TOSU, TOSH and TOSL are updated with the current value of the PC. The STKPTR is modified to point to the next location in the hardware stack.

4: See Table 4-3 for Reset value for specific condition.

5: Bits 6 and 7 of PORTA, LATA and TRISA are enabled, depending on the oscillator mode selected. When not enabled as PORTA pins, they are disabled and read '0'.

6: All bits of the ANSELH register initialize to '0' if the PBADEN bit of CONFIG3H is '0'.

TABLE 4-4: INITIALIZATION CONDITIONS FOR ALL REGISTERS (CONTINUED)

Register	Applicable Devices		Power-on Reset, Brown-out Reset	$\overline{\text{MCLR}}$ Resets, WDT Reset, RESET Instruction, Stack Resets	Wake-up via WDT or Interrupt
IPR2	PIC18F2XK20	PIC18F4XK20	1111 1111	1111 1111	uuuu uuuu
PIR2	PIC18F2XK20	PIC18F4XK20	0000 0000	0000 0000	uuuu uuuu(1)
PIE2	PIC18F2XK20	PIC18F4XK20	0000 0000	0000 0000	uuuu uuuu
IPR1	PIC18F2XK20	PIC18F4XK20	1111 1111	1111 1111	uuuu uuuu
	PIC18F2XK20	PIC18F4XK20	-111 1111	-111 1111	-uuu uuuu
PIR1	PIC18F2XK20	PIC18F4XK20	0000 0000	0000 0000	uuuu uuuu(1)
	PIC18F2XK20	PIC18F4XK20	-000 0000	-000 0000	-uuu uuuu(1)
PIE1	PIC18F2XK20	PIC18F4XK20	0000 0000	0000 0000	uuuu uuuu
	PIC18F2XK20	PIC18F4XK20	-000 0000	-000 0000	-uuu uuuu
OSCTUNE	PIC18F2XK20	PIC18F4XK20	0000 0000	0000 0000	uuuu uuuu
TRISE	PIC18F2XK20	PIC18F4XK20	---- -111	---- -111	---- -uuu
TRISD	PIC18F2XK20	PIC18F4XK20	1111 1111	1111 1111	uuuu uuuu
TRISC	PIC18F2XK20	PIC18F4XK20	1111 1111	1111 1111	uuuu uuuu
TRISB	PIC18F2XK20	PIC18F4XK20	1111 1111	1111 1111	uuuu uuuu
TRISA(5)	PIC18F2XK20	PIC18F4XK20	1111 1111(5)	1111 1111(5)	uuuu uuuu(5)
LATE	PIC18F2XK20	PIC18F4XK20	---- -xxx	---- -uuu	---- -uuu
LATD	PIC18F2XK20	PIC18F4XK20	xxxx xxxx	uuuu uuuu	uuuu uuuu
LATC	PIC18F2XK20	PIC18F4XK20	xxxx xxxx	uuuu uuuu	uuuu uuuu
LATB	PIC18F2XK20	PIC18F4XK20	xxxx xxxx	uuuu uuuu	uuuu uuuu
LATA(5)	PIC18F2XK20	PIC18F4XK20	xxxx xxxx(5)	uuuu uuuu(5)	uuuu uuuu(5)
PORTE	PIC18F2XK20	PIC18F4XK20	---- x000	---- u000	---- uuuu
	PIC18F2XK20	PIC18F4XK20	---- x---	---- u---	---- u---
PORTD	PIC18F2XK20	PIC18F4XK20	xxxx xxxx	uuuu uuuu	uuuu uuuu
PORTC	PIC18F2XK20	PIC18F4XK20	xxxx xxxx	uuuu uuuu	uuuu uuuu
PORTB	PIC18F2XK20	PIC18F4XK20	xxx0 0000	uuu0 0000	uuuu uuuu
PORTA(5)	PIC18F2XK20	PIC18F4XK20	xx0x 0000(5)	uu0u 0000(5)	uuuu uuuu(5)
ANSELH(6)	PIC18F2XK20	PIC18F4XK20	---1 1111	---1 1111	---u uuuu
ANSEL	PIC18F2XK20	PIC18F4XK20	1111 1111	1111 1111	uuuu uuuu
IOCB	PIC18F2XK20	PIC18F4XK20	0000 ----	0000 ----	uuuu ----
WPUB	PIC18F2XK20	PIC18F4XK20	1111 1111	1111 1111	uuuu uuuu
CM1CON0	PIC18F2XK20	PIC18F4XK20	0000 0000	0000 0000	uuuu uuuu
CM2CON0	PIC18F2XK20	PIC18F4XK20	0000 0000	0000 0000	uuuu uuuu

Legend: u = unchanged, x = unknown, - = unimplemented bit, read as '0', q = value depends on condition.
Shaded cells indicate conditions do not apply for the designated device.

Note 1: One or more bits in the INTCONx or PIRx registers will be affected (to cause wake-up).

2: When the wake-up is due to an interrupt and the GIEL or GIEH bit is set, the PC is loaded with the interrupt vector (0008h or 0018h).

3: When the wake-up is due to an interrupt and the GIEL or GIEH bit is set, the TOSU, TOSH and TOSL are updated with the current value of the PC. The STKPTR is modified to point to the next location in the hardware stack.

4: See Table 4-3 for Reset value for specific condition.

5: Bits 6 and 7 of PORTA, LATA and TRISA are enabled, depending on the oscillator mode selected. When not enabled as PORTA pins, they are disabled and read '0'.

6: All bits of the ANSELH register initialize to '0' if the PBADEN bit of CONFIG3H is '0'.

© 2010 Microchip Technology Inc.

TABLE 4-4: INITIALIZATION CONDITIONS FOR ALL REGISTERS (CONTINUED)

Register	Applicable Devices		Power-on Reset, Brown-out Reset	$\overline{\text{MCLR}}$ Resets, WDT Reset, RESET Instruction, Stack Resets	Wake-up via WDT or Interrupt
CM2CON1	PIC18F2XK20	PIC18F4XK20	0000 ----	0000 ----	uuuu ----
SLRCON	PIC18F2XK20	PIC18F4XK20	---1 1111	---1 1111	---u uuuu
SSPMSK	PIC18F2XK20	PIC18F4XK20	1111 1111	1111 1111	uuuu uuuu

Legend: u = unchanged, x = unknown, - = unimplemented bit, read as '0', q = value depends on condition.
Shaded cells indicate conditions do not apply for the designated device.

Note 1: One or more bits in the INTCONx or PIRx registers will be affected (to cause wake-up).

2: When the wake-up is due to an interrupt and the GIEL or GIEH bit is set, the PC is loaded with the interrupt vector (0008h or 0018h).

3: When the wake-up is due to an interrupt and the GIEL or GIEH bit is set, the TOSU, TOSH and TOSL are updated with the current value of the PC. The STKPTR is modified to point to the next location in the hardware stack.

4: See Table 4-3 for Reset value for specific condition.

5: Bits 6 and 7 of PORTA, LATA and TRISA are enabled, depending on the oscillator mode selected. When not enabled as PORTA pins, they are disabled and read '0'.

6: All bits of the ANSELH register initialize to '0' if the PBADEN bit of CONFIG3H is '0'.

NOTES:

© 2010 Microchip Technology Inc.

5.0 MEMORY ORGANIZATION

There are three types of memory in PIC18 Enhanced microcontroller devices:

- Program Memory
- Data RAM
- Data EEPROM

As Harvard architecture devices, the data and program memories use separate busses; this allows for concurrent access of the two memory spaces. The data EEPROM, for practical purposes, can be regarded as a peripheral device, since it is addressed and accessed through a set of control registers.

Additional detailed information on the operation of the Flash program memory is provided in **Section 6.0 "Flash Program Memory"**. Data EEPROM is discussed separately in **Section 7.0 "Data EEPROM Memory"**.

5.1 Program Memory Organization

PIC18 microcontrollers implement a 21-bit program counter, which is capable of addressing a 2-Mbyte program memory space. Accessing a location between the upper boundary of the physically implemented memory and the 2-Mbyte address will return all '0's (a NOP instruction).

This family of devices contain the following:

- PIC18F23K20, PIC18F43K20: 8 Kbytes of Flash Memory, up to 4,096 single-word instructions
- PIC18F24K20, PIC18F44K20: 16 Kbytes of Flash Memory, up to 8,192 single-word instructions
- PIC18F25K20, PIC18F45K20: 32 Kbytes of Flash Memory, up to 16,384 single-word instructions
- PIC18F26K20, PIC18F46K20: 64 Kbytes of Flash Memory, up to 37,768 single-word instructions

PIC18 devices have two interrupt vectors. The Reset vector address is at 0000h and the interrupt vector addresses are at 0008h and 0018h.

The program memory map for PIC18F2XK20/4XK20 devices is shown in Figure 5-1. Memory block details are shown in Figure 23-2.

FIGURE 5-1: PROGRAM MEMORY MAP AND STACK FOR PIC18F2XK20/4XK20 DEVICES

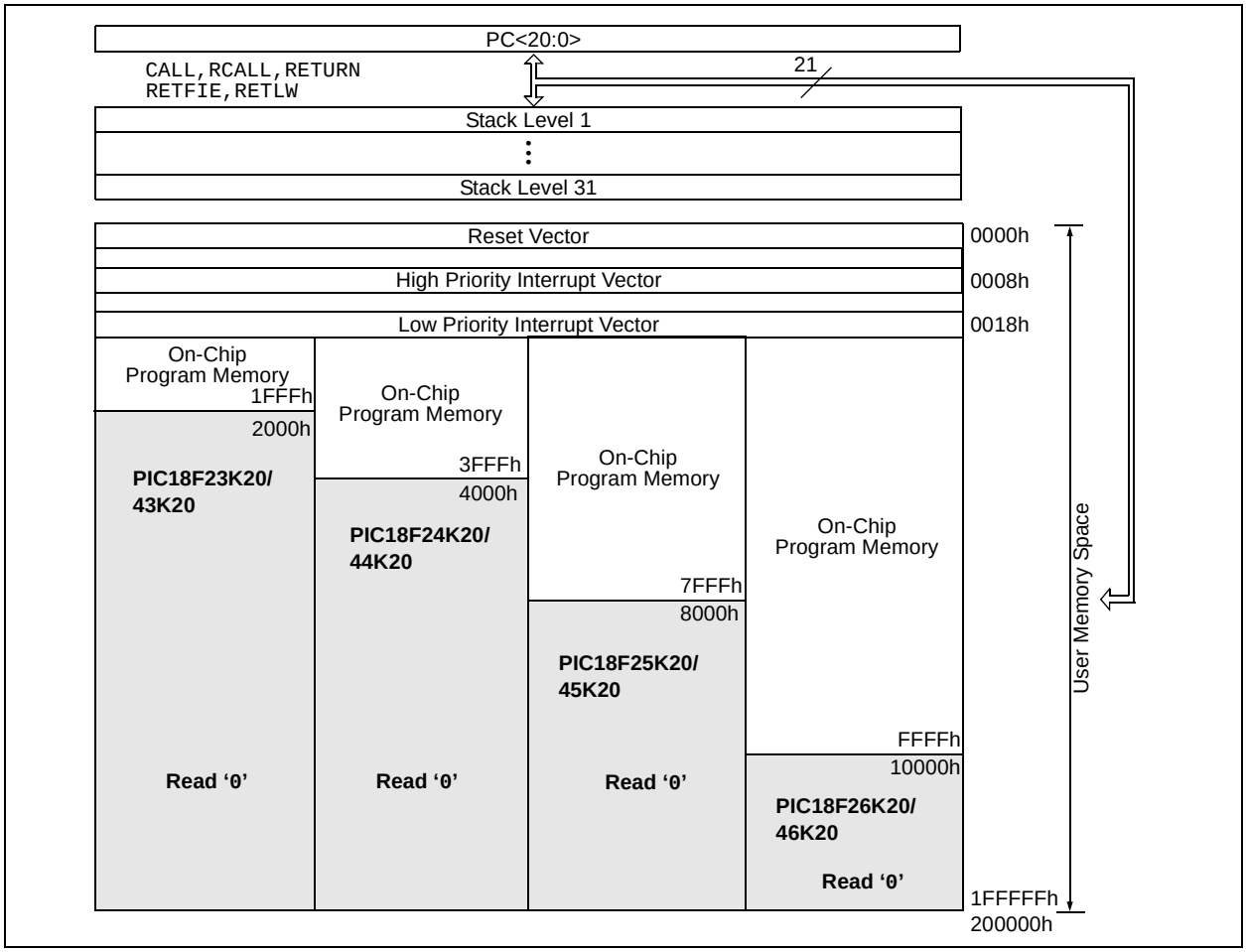

5.1.1 PROGRAM COUNTER

The Program Counter (PC) specifies the address of the instruction to fetch for execution. The PC is 21 bits wide and is contained in three separate 8-bit registers. The low byte, known as the PCL register, is both readable and writable. The high byte, or PCH register, contains the PC<15:8> bits; it is not directly readable or writable. Updates to the PCH register are performed through the PCLATH register. The upper byte is called PCU. This register contains the PC<20:16> bits; it is also not directly readable or writable. Updates to the PCU register are performed through the PCLATU register.

The contents of PCLATH and PCLATU are transferred to the program counter by any operation that writes PCL. Similarly, the upper two bytes of the program counter are transferred to PCLATH and PCLATU by an operation that reads PCL. This is useful for computed offsets to the PC (see **Section 5.1.4.1 "Computed GOTO"**).

The PC addresses bytes in the program memory. To prevent the PC from becoming misaligned with word instructions, the Least Significant bit of PCL is fixed to a value of '0'. The PC increments by 2 to address sequential instructions in the program memory.

The CALL, RCALL, GOTO and program branch instructions write to the program counter directly. For these instructions, the contents of PCLATH and PCLATU are not transferred to the program counter.

5.1.2 RETURN ADDRESS STACK

The return address stack allows any combination of up to 31 program calls and interrupts to occur. The PC is pushed onto the stack when a CALL or RCALL instruction is executed or an interrupt is Acknowledged. The PC value is pulled off the stack on a RETURN, RETLW or a RETFIE instruction. PCLATU and PCLATH are not affected by any of the RETURN or CALL instructions.

The stack operates as a 31-word by 21-bit RAM and a 5-bit Stack Pointer, STKPTR. The stack space is not part of either program or data space. The Stack Pointer is readable and writable and the address on the top of the stack is readable and writable through the Top-of-Stack (TOS) Special File Registers. Data can also be pushed to, or popped from the stack, using these registers.

A CALL type instruction causes a push onto the stack; the Stack Pointer is first incremented and the location pointed to by the Stack Pointer is written with the contents of the PC (already pointing to the instruction following the CALL). A RETURN type instruction causes a pop from the stack; the contents of the location pointed to by the STKPTR are transferred to the PC and then the Stack Pointer is decremented.

The Stack Pointer is initialized to '00000' after all Resets. There is no RAM associated with the location corresponding to a Stack Pointer value of '00000'; this is only a Reset value. Status bits indicate if the stack is full or has overflowed or has underflowed.

5.1.2.1 Top-of-Stack Access

Only the top of the return address stack (TOS) is readable and writable. A set of three registers, TOSU:TOSH:TOSL, hold the contents of the stack location pointed to by the STKPTR register (Figure 5-2). This allows users to implement a software stack if necessary. After a CALL, RCALL or interrupt, the software can read the pushed value by reading the TOSU:TOSH:TOSL registers. These values can be placed on a user defined software stack. At return time, the software can return these values to TOSU:TOSH:TOSL and do a return.

The user must disable the global interrupt enable bits while accessing the stack to prevent inadvertent stack corruption.

FIGURE 5-2: RETURN ADDRESS STACK AND ASSOCIATED REGISTERS

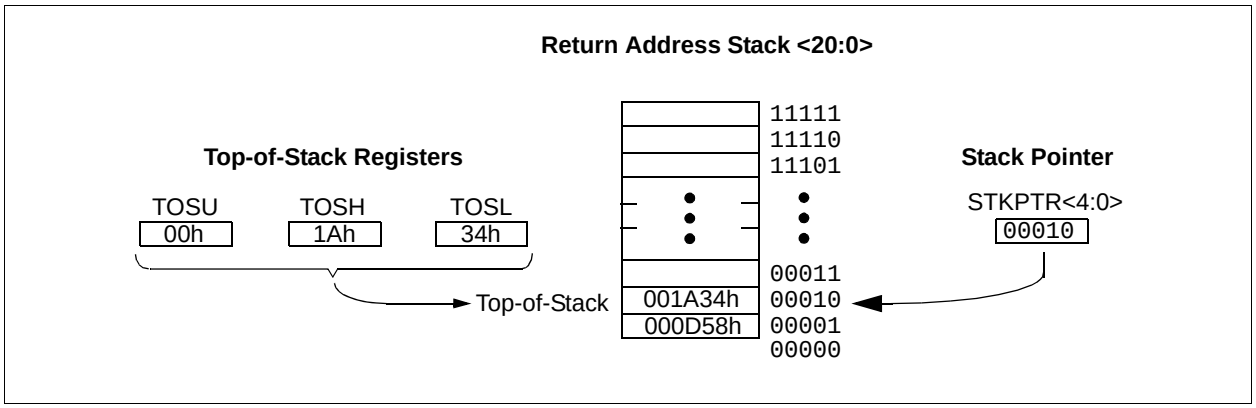

© 2010 Microchip Technology Inc.

5.1.2.2 Return Stack Pointer (STKPTR)

The STKPTR register (Register 5-1) contains the Stack Pointer value, the STKFUL (stack full) Status bit and the STKUNF (stack underflow) Status bits. The value of the Stack Pointer can be 0 through 31. The Stack Pointer increments before values are pushed onto the stack and decrements after values are popped off the stack. On Reset, the Stack Pointer value will be zero. The user may read and write the Stack Pointer value. This feature can be used by a Real-Time Operating System (RTOS) for return stack maintenance.

After the PC is pushed onto the stack 31 times (without popping any values off the stack), the STKFUL bit is set. The STKFUL bit is cleared by software or by a POR.

The action that takes place when the stack becomes full depends on the state of the STVREN (Stack Overflow Reset Enable) Configuration bit. (Refer to **Section 23.1 "Configuration Bits"** for a description of the device Configuration bits.) If STVREN is set (default), the 31st push will push the (PC + 2) value onto the stack, set the STKFUL bit and reset the device. The STKFUL bit will remain set and the Stack Pointer will be set to zero.

If STVREN is cleared, the STKFUL bit will be set on the 31st push and the Stack Pointer will increment to 31. Any additional pushes will not overwrite the 31st push and STKPTR will remain at 31.

When the stack has been popped enough times to unload the stack, the next pop will return a value of zero to the PC and sets the STKUNF bit, while the Stack Pointer remains at zero. The STKUNF bit will remain set until cleared by software or until a POR occurs.

Note:	Returning a value of zero to the PC on an underflow has the effect of vectoring the program to the Reset vector, where the stack conditions can be verified and appropriate actions can be taken. This is not the same as a Reset, as the contents of the SFRs are not affected.

5.1.2.3 PUSH and POP Instructions

Since the Top-of-Stack is readable and writable, the ability to push values onto the stack and pull values off the stack without disturbing normal program execution is a desirable feature. The PIC18 instruction set includes two instructions, PUSH and POP, that permit the TOS to be manipulated under software control. TOSU, TOSH and TOSL can be modified to place data or a return address on the stack.

The PUSH instruction places the current PC value onto the stack. This increments the Stack Pointer and loads the current PC value onto the stack.

The POP instruction discards the current TOS by decrementing the Stack Pointer. The previous value pushed onto the stack then becomes the TOS value.

REGISTER 5-1: STKPTR: STACK POINTER REGISTER

R/C-0	R/C-0	U-0	R/W-0	R/W-0	R/W-0	R/W-0	R/W-0
STKFUL(1)	STKUNF(1)	—	SP4	SP3	SP2	SP1	SP0
bit 7							bit 0

Legend:			
R = Readable bit	W = Writable bit	U = Unimplemented	C = Clearable only bit
-n = Value at POR	'1' = Bit is set	'0' = Bit is cleared	x = Bit is unknown

bit 7 **STKFUL:** Stack Full Flag bit(1)
1 = Stack became full or overflowed
0 = Stack has not become full or overflowed

bit 6 **STKUNF:** Stack Underflow Flag bit(1)
1 = Stack underflow occurred
0 = Stack underflow did not occur

bit 5 **Unimplemented:** Read as '0'

bit 4-0 **SP<4:0>:** Stack Pointer Location bits

Note 1: Bit 7 and bit 6 are cleared by user software or by a POR.

5.1.2.4 Stack Full and Underflow Resets

Device Resets on stack overflow and stack underflow conditions are enabled by setting the STVREN bit in Configuration Register 4L. When STVREN is set, a full or underflow will set the appropriate STKFUL or STKUNF bit and then cause a device Reset. When STVREN is cleared, a full or underflow condition will set the appropriate STKFUL or STKUNF bit but not cause a device Reset. The STKFUL or STKUNF bits are cleared by the user software or a Power-on Reset.

5.1.3 FAST REGISTER STACK

A fast register stack is provided for the Status, WREG and BSR registers, to provide a “fast return” option for interrupts. The stack for each register is only one level deep and is neither readable nor writable. It is loaded with the current value of the corresponding register when the processor vectors for an interrupt. All interrupt sources will push values into the stack registers. The values in the registers are then loaded back into their associated registers if the `RETFIE, FAST` instruction is used to return from the interrupt.

If both low and high priority interrupts are enabled, the stack registers cannot be used reliably to return from low priority interrupts. If a high priority interrupt occurs while servicing a low priority interrupt, the stack register values stored by the low priority interrupt will be overwritten. In these cases, users must save the key registers by software during a low priority interrupt.

If interrupt priority is not used, all interrupts may use the fast register stack for returns from interrupt. If no interrupts are used, the fast register stack can be used to restore the Status, WREG and BSR registers at the end of a subroutine call. To use the fast register stack for a subroutine call, a `CALL label, FAST` instruction must be executed to save the Status, WREG and BSR registers to the fast register stack. A `RETURN, FAST` instruction is then executed to restore these registers from the fast register stack.

Example 5-1 shows a source code example that uses the fast register stack during a subroutine call and return.

EXAMPLE 5-1: FAST REGISTER STACK CODE EXAMPLE

```
CALL SUB1, FAST    ;STATUS, WREG, BSR
                   ;SAVED IN FAST REGISTER
                   ;STACK
       •
       •

SUB1   •
       •
   RETURN, FAST    ;RESTORE VALUES SAVED
                   ;IN FAST REGISTER STACK
```

5.1.4 LOOK-UP TABLES IN PROGRAM MEMORY

There may be programming situations that require the creation of data structures, or look-up tables, in program memory. For PIC18 devices, look-up tables can be implemented in two ways:

- Computed `GOTO`
- Table Reads

5.1.4.1 Computed GOTO

A computed `GOTO` is accomplished by adding an offset to the program counter. An example is shown in Example 5-2.

A look-up table can be formed with an `ADDWF PCL` instruction and a group of `RETLW nn` instructions. The W register is loaded with an offset into the table before executing a call to that table. The first instruction of the called routine is the `ADDWF PCL` instruction. The next instruction executed will be one of the `RETLW nn` instructions that returns the value ‘nn’ to the calling function.

The offset value (in WREG) specifies the number of bytes that the program counter should advance and should be multiples of 2 (LSb = `0`).

In this method, only one data byte may be stored in each instruction location and room on the return address stack is required.

EXAMPLE 5-2: COMPUTED GOTO USING AN OFFSET VALUE

```
        MOVF   OFFSET, W
        CALL   TABLE
ORG     nn00h
TABLE   ADDWF  PCL
        RETLW  nnh
        RETLW  nnh
        RETLW  nnh
        .
        .
        .
```

5.1.4.2 Table Reads and Table Writes

A better method of storing data in program memory allows two bytes of data to be stored in each instruction location.

Look-up table data may be stored two bytes per program word by using table reads and writes. The Table Pointer (TBLPTR) register specifies the byte address and the Table Latch (TABLAT) register contains the data that is read from or written to program memory. Data is transferred to or from program memory one byte at a time.

Table read and table write operations are discussed further in **Section 6.1 “Table Reads and Table Writes”**.

© 2010 Microchip Technology Inc.

5.2 PIC18 Instruction Cycle

5.2.1 CLOCKING SCHEME

The microcontroller clock input, whether from an internal or external source, is internally divided by four to generate four non-overlapping quadrature clocks (Q1, Q2, Q3 and Q4). Internally, the program counter is incremented on every Q1; the instruction is fetched from the program memory and latched into the instruction register during Q4. The instruction is decoded and executed during the following Q1 through Q4. The clocks and instruction execution flow are shown in Figure 5-3.

5.2.2 INSTRUCTION FLOW/PIPELINING

An “Instruction Cycle” consists of four Q cycles: Q1 through Q4. The instruction fetch and execute are pipelined in such a manner that a fetch takes one instruction cycle, while the decode and execute take another instruction cycle. However, due to the pipelining, each instruction effectively executes in one cycle. If an instruction causes the program counter to change (e.g., `GOTO`), then two cycles are required to complete the instruction (Example 5-3).

A fetch cycle begins with the Program Counter (PC) incrementing in Q1.

In the execution cycle, the fetched instruction is latched into the Instruction Register (IR) in cycle Q1. This instruction is then decoded and executed during the Q2, Q3 and Q4 cycles. Data memory is read during Q2 (operand read) and written during Q4 (destination write).

FIGURE 5-3: CLOCK/INSTRUCTION CYCLE

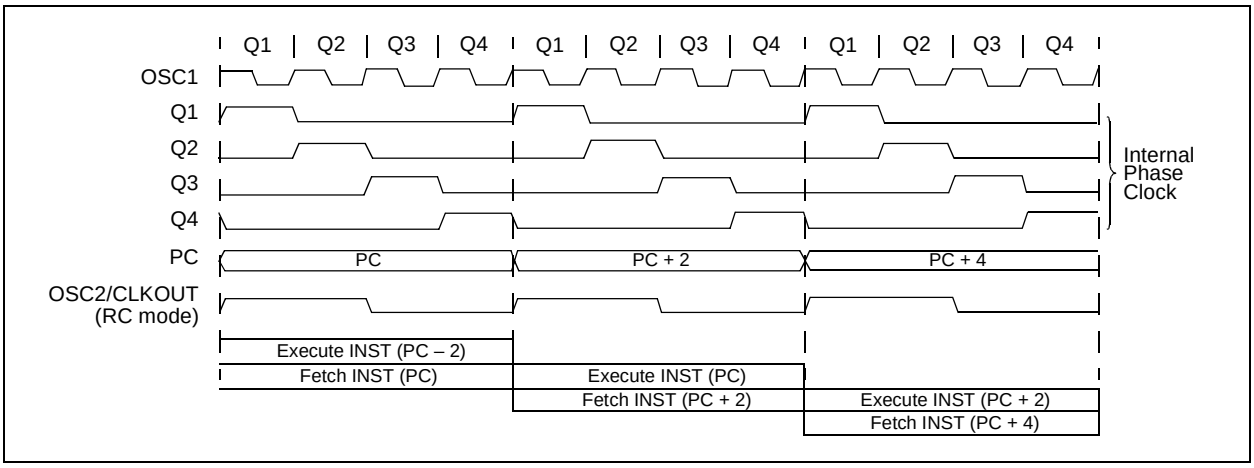

EXAMPLE 5-3: INSTRUCTION PIPELINE FLOW

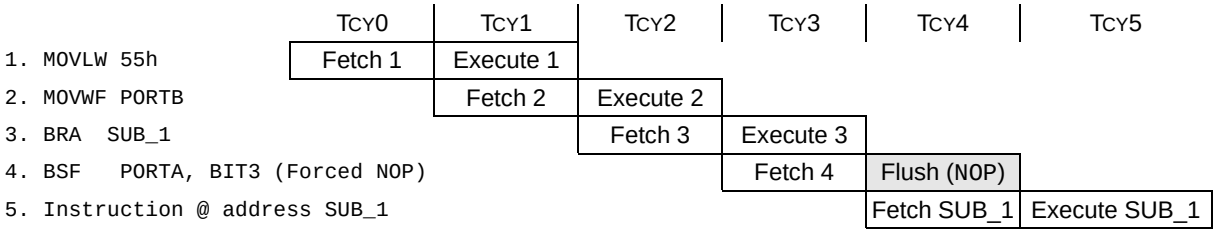

All instructions are single cycle, except for any program branches. These take two cycles since the fetch instruction is “flushed” from the pipeline while the new instruction is being fetched and then executed.

5.2.3 INSTRUCTIONS IN PROGRAM MEMORY

The program memory is addressed in bytes. Instructions are stored as either two bytes or four bytes in program memory. The Least Significant Byte of an instruction word is always stored in a program memory location with an even address (LSb = 0). To maintain alignment with instruction boundaries, the PC increments in steps of 2 and the LSb will always read '0' (see **Section 5.1.1 "Program Counter"**).

Figure 5-4 shows an example of how instruction words are stored in the program memory.

The CALL and GOTO instructions have the absolute program memory address embedded into the instruction. Since instructions are always stored on word boundaries, the data contained in the instruction is a word address. The word address is written to PC<20:1>, which accesses the desired byte address in program memory. Instruction #2 in Figure 5-4 shows how the instruction GOTO 0006h is encoded in the program memory. Program branch instructions, which encode a relative address offset, operate in the same manner. The offset value stored in a branch instruction represents the number of single-word instructions that the PC will be offset by. **Section 24.0 "Instruction Set Summary"** provides further details of the instruction set.

FIGURE 5-4: INSTRUCTIONS IN PROGRAM MEMORY

			LSB = 1	LSB = 0	Word Address ↓
Program Memory Byte Locations →					000000h
					000002h
					000004h
					000006h
Instruction 1:	MOVLW	055h	0Fh	55h	000008h
Instruction 2:	GOTO	0006h	EFh	03h	00000Ah
			F0h	00h	00000Ch
Instruction 3:	MOVFF	123h, 456h	C1h	23h	00000Eh
			F4h	56h	000010h
					000012h
					000014h

5.2.4 TWO-WORD INSTRUCTIONS

The standard PIC18 instruction set has four two-word instructions: CALL, MOVFF, GOTO and LSFR. In all cases, the second word of the instruction always has '1111' as its four Most Significant bits; the other 12 bits are literal data, usually a data memory address.

The use of '1111' in the 4 MSbs of an instruction specifies a special form of NOP. If the instruction is executed in proper sequence – immediately after the first word – the data in the second word is accessed and used by the instruction sequence. If the first word is skipped for some reason and the second word is executed by itself, a NOP is executed instead. This is necessary for cases when the two-word instruction is preceded by a conditional instruction that changes the PC. Example 5-4 shows how this works.

Note:	See **Section 5.6 "PIC18 Instruction Execution and the Extended Instruction Set"** for information on two-word instructions in the extended instruction set.

EXAMPLE 5-4: TWO-WORD INSTRUCTIONS

CASE 1:

Object Code	Source Code		
0110 0110 0000 0000	TSTFSZ	REG1	; is RAM location 0?
1100 0001 0010 0011	MOVFF	REG1, REG2	; No, skip this word
1111 0100 0101 0110			; Execute this word as a NOP
0010 0100 0000 0000	ADDWF	REG3	; continue code

CASE 2:

Object Code	Source Code		
0110 0110 0000 0000	TSTFSZ	REG1	; is RAM location 0?
1100 0001 0010 0011	MOVFF	REG1, REG2	; Yes, execute this word
1111 0100 0101 0110			; 2nd word of instruction
0010 0100 0000 0000	ADDWF	REG3	; continue code

© 2010 Microchip Technology Inc.

5.3 Data Memory Organization

Note:	The operation of some aspects of data memory are changed when the PIC18 extended instruction set is enabled. See **Section 5.5 "Data Memory and the Extended Instruction Set"** for more information.

The data memory in PIC18 devices is implemented as static RAM. Each register in the data memory has a 12-bit address, allowing up to 4096 bytes of data memory. The memory space is divided into as many as 16 banks that contain 256 bytes each. Figures 5-5 through 5-7 show the data memory organization for the PIC18F2XK20/4XK20 devices.

The data memory contains Special Function Registers (SFRs) and General Purpose Registers (GPRs). The SFRs are used for control and status of the controller and peripheral functions, while GPRs are used for data storage and scratchpad operations in the user's application. Any read of an unimplemented location will read as '0's.

The instruction set and architecture allow operations across all banks. The entire data memory may be accessed by Direct, Indirect or Indexed Addressing modes. Addressing modes are discussed later in this subsection.

To ensure that commonly used registers (SFRs and select GPRs) can be accessed in a single cycle, PIC18 devices implement an Access Bank. This is a 256-byte memory space that provides fast access to SFRs and the lower portion of GPR Bank 0 without using the Bank Select Register (BSR). **Section 5.3.2 "Access Bank"** provides a detailed description of the Access RAM.

5.3.1 BANK SELECT REGISTER (BSR)

Large areas of data memory require an efficient addressing scheme to make rapid access to any address possible. Ideally, this means that an entire address does not need to be provided for each read or write operation. For PIC18 devices, this is accomplished with a RAM banking scheme. This divides the memory space into 16 contiguous banks of 256 bytes. Depending on the instruction, each location can be addressed directly by its full 12-bit address, or an 8-bit low-order address and a 4-bit Bank Pointer.

Most instructions in the PIC18 instruction set make use of the Bank Pointer, known as the Bank Select Register (BSR). This SFR holds the 4 Most Significant bits of a location's address; the instruction itself includes the 8 Least Significant bits. Only the four lower bits of the BSR are implemented (BSR<3:0>). The upper four bits are unused; they will always read '0' and cannot be written to. The BSR can be loaded directly by using the MOVLB instruction.

The value of the BSR indicates the bank in data memory; the 8 bits in the instruction show the location in the bank and can be thought of as an offset from the bank's lower boundary. The relationship between the BSR's value and the bank division in data memory is shown in Figures 5-5 through 5-7.

Since up to 16 registers may share the same low-order address, the user must always be careful to ensure that the proper bank is selected before performing a data read or write. For example, writing what should be program data to an 8-bit address of F9h while the BSR is 0Fh will end up resetting the program counter.

While any bank can be selected, only those banks that are actually implemented can be read or written to. Writes to unimplemented banks are ignored, while reads from unimplemented banks will return '0's. Even so, the STATUS register will still be affected as if the operation was successful. The data memory maps in Figures 5-5 through 5-7 indicate which banks are implemented.

In the core PIC18 instruction set, only the MOVFF instruction fully specifies the 12-bit address of the source and target registers. This instruction ignores the BSR completely when it executes. All other instructions include only the low-order address as an operand and must use either the BSR or the Access Bank to locate their target registers.

FIGURE 5-5: DATA MEMORY MAP FOR PIC18F23K20/43K20 DEVICES

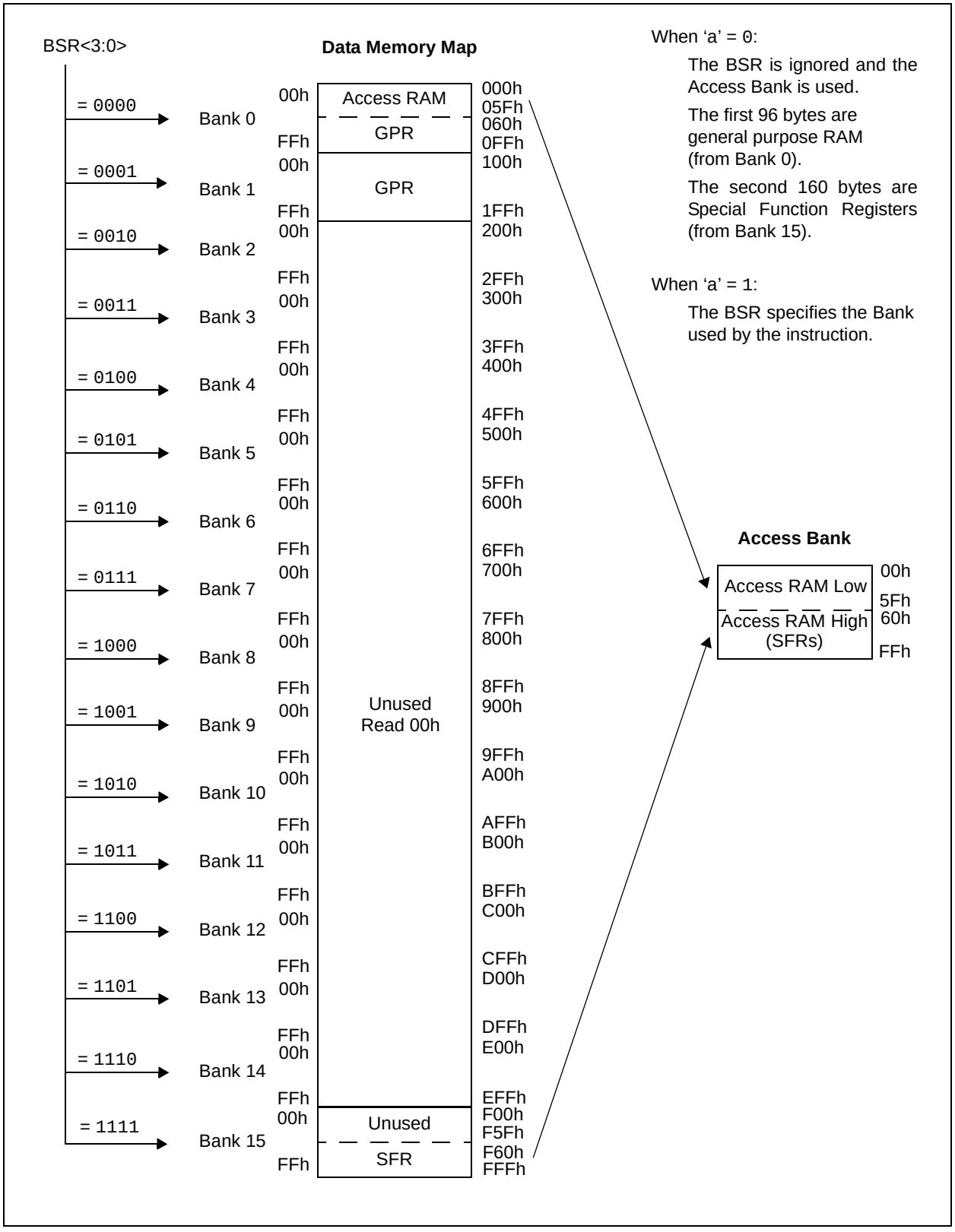

© 2010 Microchip Technology Inc.

FIGURE 5-6: DATA MEMORY MAP FOR PIC18F24K20/44K20 DEVICES

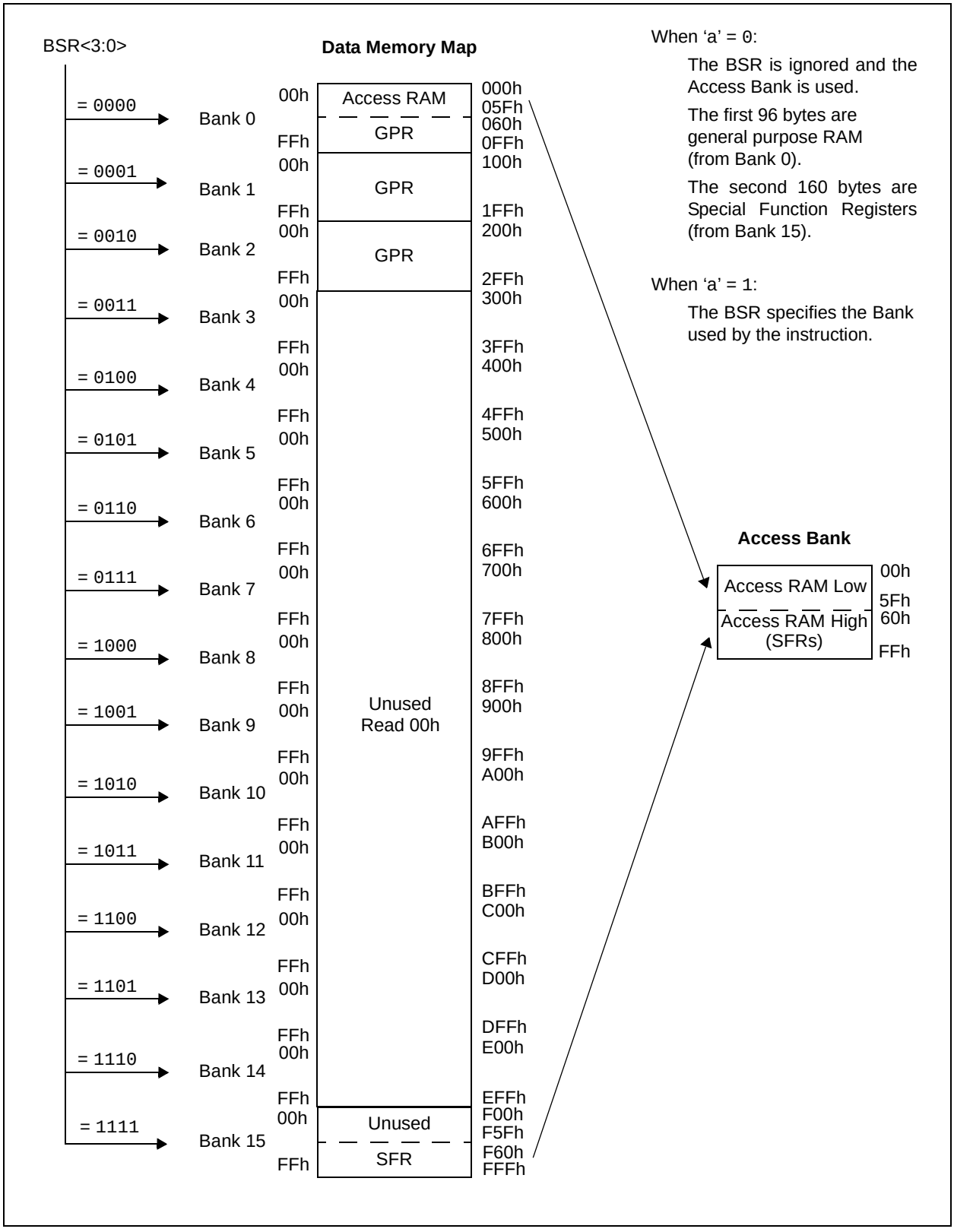

FIGURE 5-7: DATA MEMORY MAP FOR PIC18F25K20/45K20 DEVICES

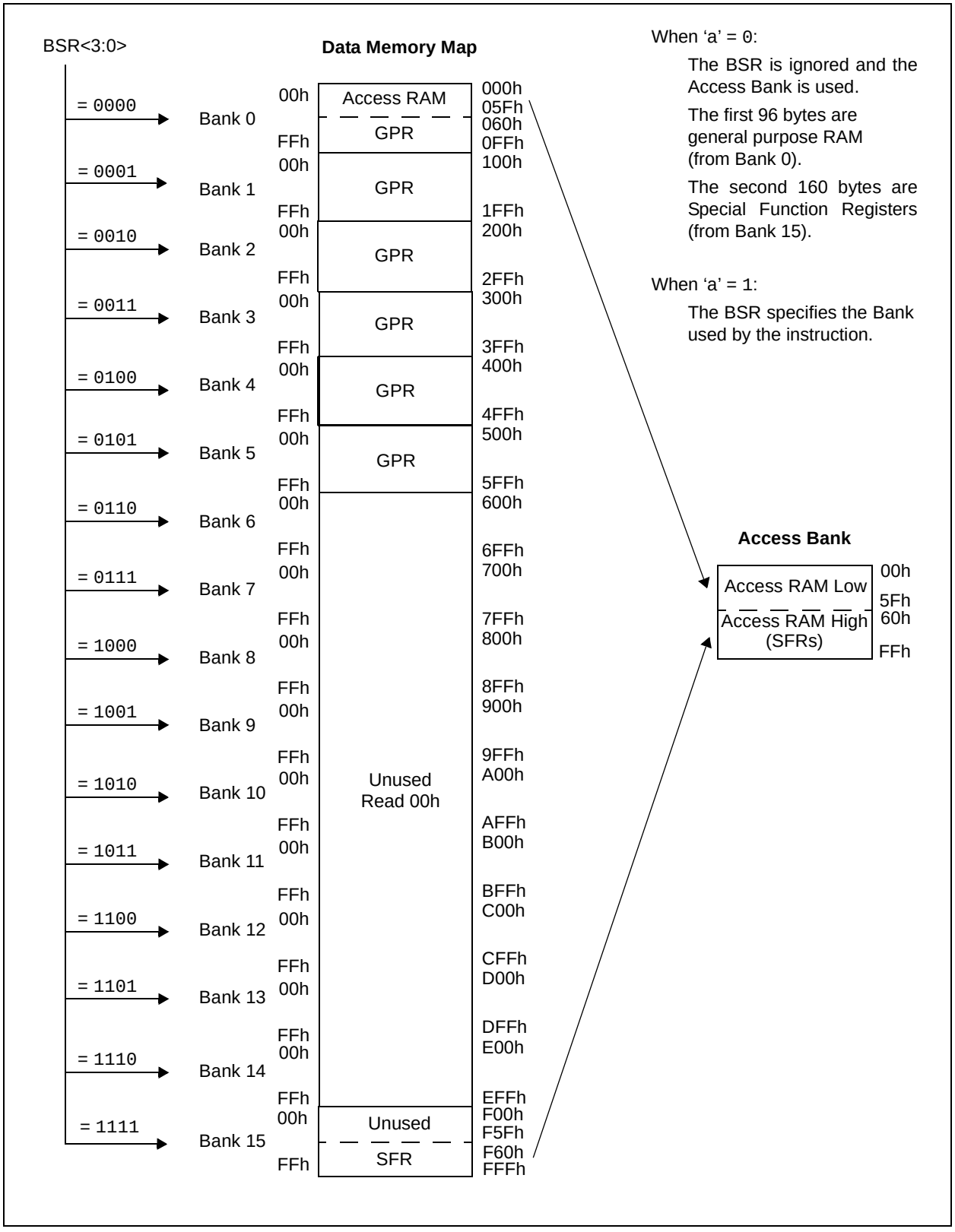

© 2010 Microchip Technology Inc.

FIGURE 5-8: DATA MEMORY MAP FOR PIC18F26K20/46K20 DEVICES

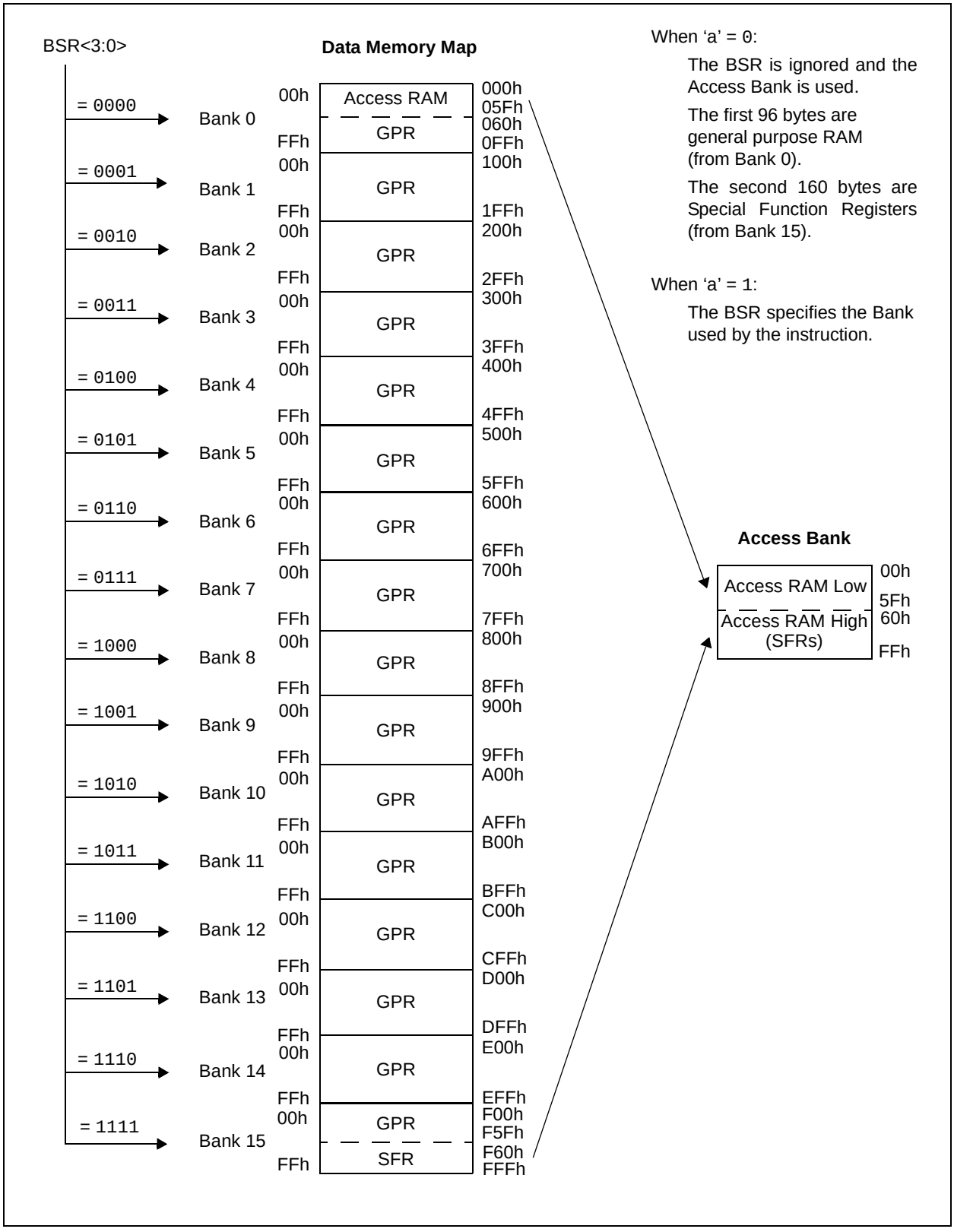

FIGURE 5-9: USE OF THE BANK SELECT REGISTER (DIRECT ADDRESSING)

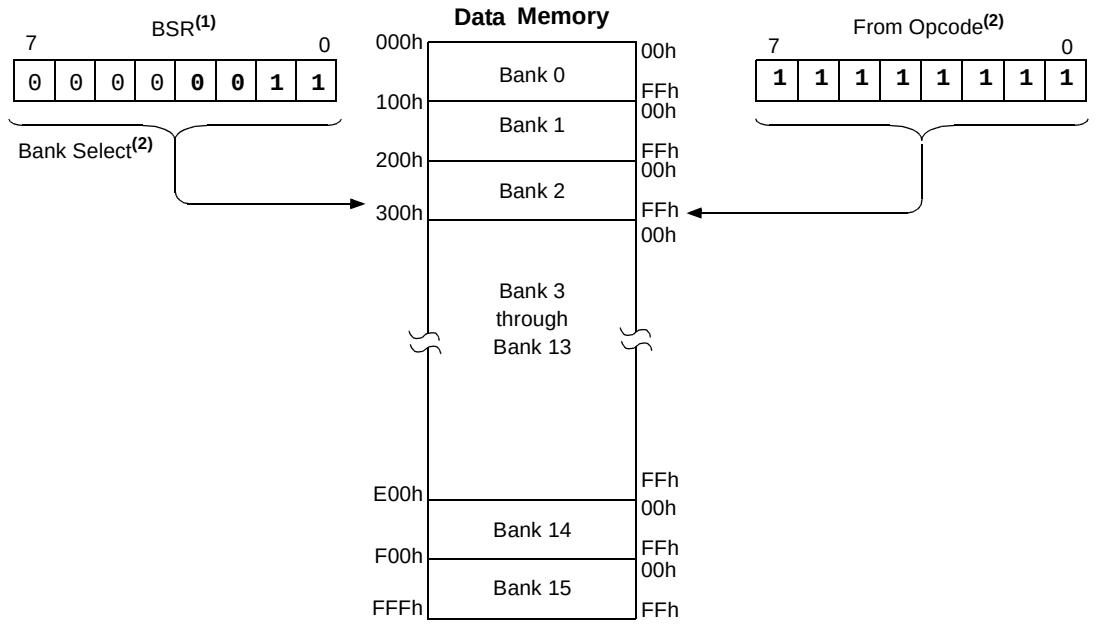

Note 1: The Access RAM bit of the instruction can be used to force an override of the selected bank (BSR<3:0>) to the registers of the Access Bank.

2: The `MOVFF` instruction embeds the entire 12-bit address in the instruction.

© 2010 Microchip Technology Inc.

5.3.2 ACCESS BANK

While the use of the BSR with an embedded 8-bit address allows users to address the entire range of data memory, it also means that the user must always ensure that the correct bank is selected. Otherwise, data may be read from or written to the wrong location. This can be disastrous if a GPR is the intended target of an operation, but an SFR is written to instead. Verifying and/or changing the BSR for each read or write to data memory can become very inefficient.

To streamline access for the most commonly used data memory locations, the data memory is configured with an Access Bank, which allows users to access a mapped block of memory without specifying a BSR. The Access Bank consists of the first 96 bytes of memory (00h-5Fh) in Bank 0 and the last 160 bytes of memory (60h-FFh) in Block 15. The lower half is known as the “Access RAM” and is composed of GPRs. This upper half is also where the device’s SFRs are mapped. These two areas are mapped contiguously in the Access Bank and can be addressed in a linear fashion by an 8-bit address (Figures 5-5 through 5-7).

The Access Bank is used by core PIC18 instructions that include the Access RAM bit (the ‘a’ parameter in the instruction). When ‘a’ is equal to ‘1’, the instruction uses the BSR and the 8-bit address included in the opcode for the data memory address. When ‘a’ is ‘0’, however, the instruction is forced to use the Access Bank address map; the current value of the BSR is ignored entirely.

Using this “forced” addressing allows the instruction to operate on a data address in a single cycle, without updating the BSR first. For 8-bit addresses of 60h and above, this means that users can evaluate and operate on SFRs more efficiently. The Access RAM below 60h is a good place for data values that the user might need to access rapidly, such as immediate computational results or common program variables. Access RAM also allows for faster and more code efficient context saving and switching of variables.

The mapping of the Access Bank is slightly different when the extended instruction set is enabled (XINST Configuration bit = 1). This is discussed in more detail in **Section 5.5.3 “Mapping the Access Bank in Indexed Literal Offset Mode”**.

5.3.3 GENERAL PURPOSE REGISTER FILE

PIC18 devices may have banked memory in the GPR area. This is data RAM, which is available for use by all instructions. GPRs start at the bottom of Bank 0 (address 000h) and grow upwards towards the bottom of the SFR area. GPRs are not initialized by a Power-on Reset and are unchanged on all other Resets.

5.3.4 SPECIAL FUNCTION REGISTERS

The Special Function Registers (SFRs) are registers used by the CPU and peripheral modules for controlling the desired operation of the device. These registers are implemented as static RAM. SFRs start at the top of data memory (FFFh) and extend downward to occupy the top portion of Bank 15 (F60h to FFFh). A list of these registers is given in Table 5-1 and Table 5-2.

The SFRs can be classified into two sets: those associated with the “core” device functionality (ALU, Resets and interrupts) and those related to the peripheral functions. The Reset and interrupt registers are described in their respective chapters, while the ALU’s STATUS register is described later in this section. Registers related to the operation of a peripheral feature are described in the chapter for that peripheral.

The SFRs are typically distributed among the peripherals whose functions they control. Unused SFR locations are unimplemented and read as ‘0’s.

TABLE 5-1: SPECIAL FUNCTION REGISTER MAP FOR PIC18F2XK20/4XK20 DEVICES

Address	Name	Address	Name	Address	Name	Address	Name
FFFh	TOSU	FD7h	TMR0H	FAFh	SPBRG	F87h	—(2)
FFEh	TOSH	FD6h	TMR0L	FAEh	RCREG	F86h	—(2)
FFDh	TOSL	FD5h	T0CON	FADh	TXREG	F85h	—(2)
FFCh	STKPTR	FD4h	—(2)	FACh	TXSTA	F84h	PORTE
FFBh	PCLATU	FD3h	OSCCON	FABh	RCSTA	F83h	PORTD(3)
FFAh	PCLATH	FD2h	HLVDCON	FAAh	EEADRH(4)	F82h	PORTC
FF9h	PCL	FD1h	WDTCON	FA9h	EEADR	F81h	PORTB
FF8h	TBLPTRU	FD0h	RCON	FA8h	EEDATA	F80h	PORTA
FF7h	TBLPTRH	FCFh	TMR1H	FA7h	EECON2(1)	F7Fh	ANSELH
FF6h	TBLPTRL	FCEh	TMR1L	FA6h	EECON1	F7Eh	ANSEL
FF5h	TABLAT	FCDh	T1CON	FA5h	—(2)	F7Dh	IOCB
FF4h	PRODH	FCCh	TMR2	FA4h	—(2)	F7Ch	WPUB
FF3h	PRODL	FCBh	PR2	FA3h	—(2)	F7Bh	CM1CON0
FF2h	INTCON	FCAh	T2CON	FA2h	IPR2	F7Ah	CM2CON0
FF1h	INTCON2	FC9h	SSPBUF	FA1h	PIR2	F79h	CM2CON1
FF0h	INTCON3	FC8h	SSPADD	FA0h	PIE2	F78h	SLRCON
FEFh	INDF0(1)	FC7h	SSPSTAT	F9Fh	IPR1	F77h	SSPMSK
FEEh	POSTINC0(1)	FC6h	SSPCON1	F9Eh	PIR1	F76h	—(2)
FEDh	POSTDEC0(1)	FC5h	SSPCON2	F9Dh	PIE1	F75h	—(2)
FECh	PREINC0(1)	FC4h	ADRESH	F9Ch	—(2)	F74h	—(2)
FEBh	PLUSW0(1)	FC3h	ADRESL	F9Bh	OSCTUNE	F73h	—(2)
FEAh	FSR0H	FC2h	ADCON0	F9Ah	—(2)	F72h	—(2)
FE9h	FSR0L	FC1h	ADCON1	F99h	—(2)	F71h	—(2)
FE8h	WREG	FC0h	ADCON2	F98h	—(2)	F70h	—(2)
FE7h	INDF1(1)	FBFh	CCPR1H	F97h	—(2)	F6Fh	—(2)
FE6h	POSTINC1(1)	FBEh	CCPR1L	F96h	TRISE(3)	F6Eh	—(2)
FE5h	POSTDEC1(1)	FBDh	CCP1CON	F95h	TRISD(3)	F6Dh	—(2)
FE4h	PREINC1(1)	FBCh	CCPR2H	F94h	TRISC	F6Ch	—(2)
FE3h	PLUSW1(1)	FBBh	CCPR2L	F93h	TRISB	F6Bh	—(2)
FE2h	FSR1H	FBAh	CCP2CON	F92h	TRISA	F6Ah	—(2)
FE1h	FSR1L	FB9h	PSTRCON	F91h	—(2)	F69h	—(2)
FE0h	BSR	FB8h	BAUDCON	F90h	—(2)	F68h	—(2)
FDFh	INDF2(1)	FB7h	PWM1CON	F8Fh	—(2)	F67h	—(2)
FDEh	POSTINC2(1)	FB6h	ECCP1AS	F8Eh	—(2)	F66h	—(2)
FDDh	POSTDEC2(1)	FB5h	CVRCON	F8Dh	LATE(3)	F65h	—(2)
FDCh	PREINC2(1)	FB4h	CVRCON2	F8Ch	LATD(3)	F64h	—(2)
FDBh	PLUSW2(1)	FB3h	TMR3H	F8Bh	LATC	F63h	—(2)
FDAh	FSR2H	FB2h	TMR3L	F8Ah	LATB	F62h	—(2)
FD9h	FSR2L	FB1h	T3CON	F89h	LATA	F61h	—(2)
FD8h	STATUS	FB0h	SPBRGH	F88h	—(2)	F60h	—(2)

Note 1: This is not a physical register.

2: Unimplemented registers are read as '0'.

3: This register is not available on PIC18F2XK20 devices.

4: This register is only implemented in the PIC18F46K20 and PIC18F26K20 devices.

© 2010 Microchip Technology Inc.

TABLE 5-2: REGISTER FILE SUMMARY (PIC18F2XK20/4XK20)

File Name	Bit 7	Bit 6	Bit 5	Bit 4	Bit 3	Bit 2	Bit 1	Bit 0	Value on POR, BOR	Details on page:
TOSU	—	—	—	Top-of-Stack Upper Byte (TOS<20:16>)					---0 0000	59, 66
TOSH	Top-of-Stack, High Byte (TOS<15:8>)								0000 0000	59, 66
TOSL	Top-of-Stack, Low Byte (TOS<7:0>)								0000 0000	59, 66
STKPTR	STKFUL	STKUNF	—	SP4	SP3	SP2	SP1	SP0	00-0 0000	59, 67
PCLATU	—	—	—	Holding Register for PC<20:16>					---0 0000	59, 66
PCLATH	Holding Register for PC<15:8>								0000 0000	59, 66
PCL	PC, Low Byte (PC<7:0>)								0000 0000	59, 66
TBLPTRU	—	—	bit 21	Program Memory Table Pointer Upper Byte (TBLPTR<20:16>)					--00 0000	59, 92
TBLPTRH	Program Memory Table Pointer, High Byte (TBLPTR<15:8>)								0000 0000	59, 92
TBLPTRL	Program Memory Table Pointer, Low Byte (TBLPTR<7:0>)								0000 0000	59, 92
TABLAT	Program Memory Table Latch								0000 0000	59, 92
PRODH	Product Register, High Byte								xxxx xxxx	59, 105
PRODL	Product Register, Low Byte								xxxx xxxx	59, 105
INTCON	GIE/GIEH	PEIE/GIEL	TMR0IE	INT0IE	RBIE	TMR0IF	INT0IF	RBIF	0000 000x	59, 109
INTCON2	$\overline{\text{RBPU}}$	INTEDG0	INTEDG1	INTEDG2	—	TMR0IP	—	RBIP	1111 -1-1	59, 110
INTCON3	INT2IP	INT1IP	—	INT2IE	INT1IE	—	INT2IF	INT1IF	11-0 0-00	59, 111
INDF0	Uses contents of FSR0 to address data memory – value of FSR0 not changed (not a physical register)								N/A	59, 84
POSTINC0	Uses contents of FSR0 to address data memory – value of FSR0 post-incremented (not a physical register)								N/A	59, 84
POSTDEC0	Uses contents of FSR0 to address data memory – value of FSR0 post-decremented (not a physical register)								N/A	59, 84
PREINC0	Uses contents of FSR0 to address data memory – value of FSR0 pre-incremented (not a physical register)								N/A	59, 84
PLUSW0	Uses contents of FSR0 to address data memory – value of FSR0 offset by W (not a physical register) –								N/A	59, 84
FSR0H	—	—	—	—	Indirect Data Memory Address Pointer 0, High Byte				---- 0000	59, 84
FSR0L	Indirect Data Memory Address Pointer 0, Low Byte								xxxx xxxx	59, 84
WREG	Working Register								xxxx xxxx	59
INDF1	Uses contents of FSR1 to address data memory – value of FSR1 not changed (not a physical register)								N/A	59, 84
POSTINC1	Uses contents of FSR1 to address data memory – value of FSR1 post-incremented (not a physical register)								N/A	59, 84
POSTDEC1	Uses contents of FSR1 to address data memory – value of FSR1 post-decremented (not a physical register)								N/A	59, 84
PREINC1	Uses contents of FSR1 to address data memory – value of FSR1 pre-incremented (not a physical register)								N/A	59, 84
PLUSW1	Uses contents of FSR1 to address data memory – value of FSR1 offset by W (not a physical register) – value of								N/A	59, 84
FSR1H	—	—	—	—	Indirect Data Memory Address Pointer 1, High Byte				---- 0000	60, 84
FSR1L	Indirect Data Memory Address Pointer 1, Low Byte								xxxx xxxx	60, 84
BSR	—	—	—	—	Bank Select Register				---- 0000	60, 71
INDF2	Uses contents of FSR2 to address data memory – value of FSR2 not changed (not a physical register)								N/A	60, 84
POSTINC2	Uses contents of FSR2 to address data memory – value of FSR2 post-incremented (not a physical register)								N/A	60, 84
POSTDEC2	Uses contents of FSR2 to address data memory – value of FSR2 post-decremented (not a physical register)								N/A	60, 84
PREINC2	Uses contents of FSR2 to address data memory – value of FSR2 pre-incremented (not a physical register)								N/A	60, 84
PLUSW2	Uses contents of FSR2 to address data memory – value of FSR2 offset by W (not a physical register) – value of								N/A	60, 84
FSR2H	—	—	—	—	Indirect Data Memory Address Pointer 2, High Byte				---- 0000	60, 84
FSR2L	Indirect Data Memory Address Pointer 2, Low Byte								xxxx xxxx	60, 84
STATUS	—	—	—	N	OV	Z	DC	C	---x xxxx	60, 82

Legend: x = unknown, u = unchanged, – = unimplemented, q = value depends on condition

Note 1: The SBOREN bit is only available when the BOREN<1:0> Configuration bits = 01; otherwise it is disabled and reads as '0'. See **Section 4.4 "Brown-out Reset (BOR)"**.

2: These registers and/or bits are not implemented on 28-pin devices and are read as '0'. Reset values are shown for 40/44-pin devices; individual unimplemented bits should be interpreted as '-'.

3: The PLLEN bit is only available in specific oscillator configuration; otherwise it is disabled and reads as '0'. See **Section 2.6.2 "PLL in HFINTOSC Modes"**.

4: The RE3 bit is only available when Master Clear Reset is disabled (MCLRE Configuration bit = 0). Otherwise, RE3 reads as '0'. This bit is read-only.

5: RA6/RA7 and their associated latch and direction bits are individually configured as port pins based on various primary oscillator modes. When disabled, these bits read as '0'.

6: All bits of the ANSELH register initialize to '0' if the PBADEN bit of CONFIG3H is '0'.

7: This register is only implemented in the PIC18F46K20 and PIC18F26K20 devices.

TABLE 5-2: REGISTER FILE SUMMARY (PIC18F2XK20/4XK20) (CONTINUED)

File Name	Bit 7	Bit 6	Bit 5	Bit 4	Bit 3	Bit 2	Bit 1	Bit 0	Value on POR, BOR	Details on page:
TMR0H	Timer0 Register, High Byte								0000 0000	60, 157
TMR0L	Timer0 Register, Low Byte								xxxx xxxx	60, 157
T0CON	TMR0ON	T08BIT	T0CS	T0SE	PSA	T0PS2	T0PS1	T0PS0	1111 1111	60, 155
OSCCON	IDLEN	IRCF2	IRCF1	IRCF0	OSTS	IOFS	SCS1	SCS0	0011 qq00	29, 60
HLVDCON	VDIRMAG	—	IRVST	HLVDEN	HLVDL3	HLVDL2	HLVDL1	HLVDL0	0-00 0101	60, 293
WDTCON	—	—	—	—	—	—	—	SWDTEN	--- ---0	60, 309
RCON	IPEN	SBOREN(1)	—	$\overline{RI}$	$\overline{TO}$	$\overline{PD}$	$\overline{POR}$	$\overline{BOR}$	0q-1 11q0	51, 58, 118
TMR1H	Timer1 Register, High Byte								xxxx xxxx	60, 165
TMR1L	Timer1 Register, Low Bytes								xxxx xxxx	60, 165
T1CON	RD16	T1RUN	T1CKPS1	T1CKPS0	T1OSCEN	$\overline{T1SYNC}$	TMR1CS	TMR1ON	0000 0000	60, 159
TMR2	Timer2 Register								0000 0000	60, 168
PR2	Timer2 Period Register								1111 1111	60, 168
T2CON	—	T2OUTPS3	T2OUTPS2	T2OUTPS1	T2OUTPS0	TMR2ON	T2CKPS1	T2CKPS0	-000 0000	60, 167
SSPBUF	SSP Receive Buffer/Transmit Register								xxxx xxxx	60, 201, 202
SSPADD	SSP Address Register in I^2C™ Slave Mode. SSP Baud Rate Reload Register in I^2C Master Mode.								0000 0000	60, 202
SSPSTAT	SMP	CKE	D/$\overline{A}$	P	S	R/$\overline{W}$	UA	BF	0000 0000	60, 194, 204
SSPCON1	WCOL	SSPOV	SSPEN	CKP	SSPM3	SSPM2	SSPM1	SSPM0	0000 0000	60, 195, 205
SSPCON2	GCEN	ACKSTAT	ACKDT	ACKEN	RCEN	PEN	RSEN	SEN	0000 0000	60, 206
ADRESH	A/D Result Register, High Byte								xxxx xxxx	61, 277
ADRESL	A/D Result Register, Low Byte								xxxx xxxx	61, 277
ADCON0	—	—	CHS3	CHS2	CHS1	CHS0	GO/$\overline{DONE}$	ADON	--00 0000	61, 271
ADCON1	—	—	VCFG1	VCFG0	—	—	—	—	--00 ----	59, 272
ADCON2	ADFM	—	ACQT2	ACQT1	ACQT0	ADCS2	ADCS1	ADCS0	0-00 0000	61, 273
CCPR1H	Capture/Compare/PWM Register 1, High Byte								xxxx xxxx	61, 144
CCPR1L	Capture/Compare/PWM Register 1, Low Byte								xxxx xxxx	61, 144
CCP1CON	P1M1	P1M0	DC1B1	DC1B0	CCP1M3	CCP1M2	CCP1M1	CCP1M0	0000 0000	61, 173
CCPR2H	Capture/Compare/PWM Register 2, High Byte								xxxx xxxx	61, 144
CCPR2L	Capture/Compare/PWM Register 2, Low Byte								xxxx xxxx	61, 144
CCP2CON	—	—	DC2B1	DC2B0	CCP2M3	CCP2M2	CCP2M1	CCP2M0	--00 0000	61, 143
PSTRCON	—	—	—	STRSYNC	STRD	STRC	STRB	STRA	---0 0001	61, 187
BAUDCON	ABDOVF	RCIDL	DTRXP	CKTXP	BRG16	—	WUE	ABDEN	0100 0-00	61, 248
PWM1CON	PRSEN	PDC6	PDC5	PDC4	PDC3	PDC2	PDC1	PDC0	0000 0000	61, 186
ECCP1AS	ECCPASE	ECCPAS2	ECCPAS1	ECCPAS0	PSSAC1	PSSAC0	PSSBD1	PSSBD0	0000 0000	61, 183
CVRCON	CVREN	CVROE	CVRR	CVRSS	CVR3	CVR2	CVR1	CVR0	0000 0000	61, 291
CVRCON2	FVREN	FVRST	—	—	—	—	—	—	00-- ----	61, 292
TMR3H	Timer3 Register, High Byte								xxxx xxxx	61, 172
TMR3L	Timer3 Register, Low Byte								xxxx xxxx	61, 172
T3CON	RD16	T3CCP2	T3CKPS1	T3CKPS0	T3CCP1	$\overline{T3SYNC}$	TMR3CS	TMR3ON	0000 0000	61, 169

Legend: x = unknown, u = unchanged, – = unimplemented, q = value depends on condition

Note 1: The SBOREN bit is only available when the BOREN<1:0> Configuration bits = 01; otherwise it is disabled and reads as '0'. See **Section 4.4 "Brown-out Reset (BOR)"**.

2: These registers and/or bits are not implemented on 28-pin devices and are read as '0'. Reset values are shown for 40/44-pin devices; individual unimplemented bits should be interpreted as '-'.

3: The PLLEN bit is only available in specific oscillator configuration; otherwise it is disabled and reads as '0'. See **Section 2.6.2 "PLL in HFINTOSC Modes"**.

4: The RE3 bit is only available when Master Clear Reset is disabled (MCLRE Configuration bit = 0). Otherwise, RE3 reads as '0'. This bit is read-only.

5: RA6/RA7 and their associated latch and direction bits are individually configured as port pins based on various primary oscillator modes. When disabled, these bits read as '0'.

6: All bits of the ANSELH register initialize to '0' if the PBADEN bit of CONFIG3H is '0'.

7: This register is only implemented in the PIC18F46K20 and PIC18F26K20 devices.

© 2010 Microchip Technology Inc.

TABLE 5-2: REGISTER FILE SUMMARY (PIC18F2XK20/4XK20) (CONTINUED)

File Name	Bit 7	Bit 6	Bit 5	Bit 4	Bit 3	Bit 2	Bit 1	Bit 0	Value on POR, BOR	Details on page:
SPBRGH	EUSART Baud Rate Generator Register, High Byte								0000 0000	61, 241
SPBRG	EUSART Baud Rate Generator Register, Low Byte								0000 0000	61, 241
RCREG	EUSART Receive Register								0000 0000	61, 238
TXREG	EUSART Transmit Register								0000 0000	61, 237
TXSTA	CSRC	TX9	TXEN	SYNC	SENDB	BRGH	TRMT	TX9D	0000 0010	61, 246
RCSTA	SPEN	RX9	SREN	CREN	ADDEN	FERR	OERR	RX9D	0000 000x	61, 247
EEADR	EEADR7	EEADR6	EEADR5	EEADR4	EEADR3	EEADR2	EEADR1	EEADR0	0000 0000	61, 90, 99
EEADRH(7)	—	—	—	—	—	—	EEADR9	EEADR8	---- --00	61, 90, 99
EEDATA	EEPROM Data Register								0000 0000	61, 90, 99
EECON2	EEPROM Control Register 2 (not a physical register)								0000 0000	61, 90, 99
EECON1	EEPGD	CFGS	—	FREE	WRERR	WREN	WR	RD	xx-0 x000	61, 91, 99
IPR2	OSCFIP	C1IP	C2IP	EEIP	BCLIP	HLVDIP	TMR3IP	CCP2IP	1111 1111	62, 117
PIR2	OSCFIF	C1IF	C2IF	EEIF	BCLIF	HLVDIF	TMR3IF	CCP2IF	0000 0000	62, 113
PIE2	OSCFIE	C1IE	C2IE	EEIE	BCLIE	HLVDIE	TMR3IE	CCP2IE	0000 0000	62, 115
IPR1	PSPIP(2)	ADIP	RCIP	TXIP	SSPIP	CCP1IP	TMR2IP	TMR1IP	1111 1111	62, 116
PIR1	PSPIF(2)	ADIF	RCIF	TXIF	SSPIF	CCP1IF	TMR2IF	TMR1IF	0000 0000	62, 112
PIE1	PSPIE(2)	ADIE	RCIE	TXIE	SSPIE	CCP1IE	TMR2IE	TMR1IE	0000 0000	62, 114
OSCTUNE	INTSRC	PLLEN(3)	TUN5	TUN4	TUN3	TUN2	TUN1	TUN0	0q00 0000	33, 62
TRISE(2)	IBF	OBF	IBOV	PSPMODE	—	TRISE2	TRISE1	TRISE0	0000 -111	62, 134
TRISD(2)	PORTD Data Direction Control Register								1111 1111	62, 130
TRISC	PORTC Data Direction Control Register								1111 1111	62, 127
TRISB	PORTB Data Direction Control Register								1111 1111	62, 124
TRISA	TRISA7(5)	TRISA6(5)	Data Direction Control Register for PORTA						1111 1111	62, 121
LATE(2)	—	—	—	—	—	PORTE Data Latch Register (Read and Write to Data Latch)			---- -xxx	62, 133
LATD(2)	PORTD Data Latch Register (Read and Write to Data Latch)								xxxx xxxx	62, 130
LATC	PORTC Data Latch Register (Read and Write to Data Latch)								xxxx xxxx	62, 127
LATB	PORTB Data Latch Register (Read and Write to Data Latch)								xxxx xxxx	62, 124
LATA	LATA7(5)	LATA6(5)	PORTA Data Latch Register (Read and Write to Data Latch)						xxxx xxxx	62, 121
PORTE	—	—	—	—	RE3(4)	RE2(2)	RE1(2)	RE0(2)	---- x000	62, 133
PORTD(2)	RD7	RD6	RD5	RD4	RD3	RD2	RD1	RD0	xxxx xxxx	62, 130
PORTC	RC7	RC6	RC5	RC4	RC3	RC2	RC1	RC0	xxxx xxxx	62, 127
PORTB	RB7	RB6	RB5	RB4	RB3	RB2	RB1	RB0	xxx0 0000	62, 124
PORTA	RA7(5)	RA6(5)	RA5	RA4	RA3	RA2	RA1	RA0	xx0x 0000	62, 121
ANSELH(6)	—	—	—	ANS12	ANS11	ANS10	ANS9	ANS8	---1 1111	62, 137
ANSEL	ANS7(2)	ANS6(2)	ANS5(2)	ANS4	ANS3	ANS2	ANS1	ANS0	1111 1111	62, 136
IOCB	IOCB7	IOCB6	IOCB5	IOCB4	—	—	—	—	0000 ----	62, 124
WPUB	WPUB7	WPUB6	WPUB5	WPUB4	WPUB3	WPUB2	WPUB1	WPUB0	1111 1111	62, 124
CM1CON0	C1ON	C1OUT	C1OE	C1POL	C1SP	C1R	C1CH1	C1CH0	0000 0000	62, 284
CM2CON0	C2ON	C2OUT	C2OE	C2POL	C2SP	C2R	C2CH1	C2CH0	0000 0000	62, 285
CM2CON1	MC1OUT	MC2OUT	C1RSEL	C2RSEL	—	—	—	—	0000 ----	63, 287
SLRCON	—	—	—	SLRE(2)	SLRD(2)	SLRC	SLRB	SLRA	---1 1111	63, 138
SSPMSK	MSK7	MSK6	MSK5	MSK4	MSK3	MSK2	MSK1	MSK0	1111 1111	63, 213

Legend: x = unknown, u = unchanged, – = unimplemented, q = value depends on condition

Note 1: The SBOREN bit is only available when the BOREN<1:0> Configuration bits = 01; otherwise it is disabled and reads as '0'. See **Section 4.4 "Brown-out Reset (BOR)"**.

2: These registers and/or bits are not implemented on 28-pin devices and are read as '0'. Reset values are shown for 40/44-pin devices; individual unimplemented bits should be interpreted as '-'.

3: The PLLEN bit is only available in specific oscillator configuration; otherwise it is disabled and reads as '0'. See **Section 2.6.2 "PLL in HFINTOSC Modes"**.

4: The RE3 bit is only available when Master Clear Reset is disabled (MCLRE Configuration bit = 0). Otherwise, RE3 reads as '0'. This bit is read-only.

5: RA6/RA7 and their associated latch and direction bits are individually configured as port pins based on various primary oscillator modes. When disabled, these bits read as '0'.

6: All bits of the ANSELH register initialize to '0' if the PBADEN bit of CONFIG3H is '0'.

7: This register is only implemented in the PIC18F46K20 and PIC18F26K20 devices.

5.3.5 STATUS REGISTER

The STATUS register, shown in Register 5-2, contains the arithmetic status of the ALU. As with any other SFR, it can be the operand for any instruction.

If the STATUS register is the destination for an instruction that affects the Z, DC, C, OV or N bits, the results of the instruction are not written; instead, the STATUS register is updated according to the instruction performed. Therefore, the result of an instruction with the STATUS register as its destination may be different than intended. As an example, `CLRF STATUS` will set the Z bit and leave the remaining Status bits unchanged (‘`000u u1uu`’).

It is recommended that only `BCF`, `BSF`, `SWAPF`, `MOVFF` and `MOVWF` instructions are used to alter the STATUS register, because these instructions do not affect the Z, C, DC, OV or N bits in the STATUS register.

For other instructions that do not affect Status bits, see the instruction set summaries in Table 24-2 and Table 24-3.

Note:	The C and DC bits operate as the $\overline{\text{borrow}}$ and digit $\overline{\text{borrow}}$ bits, respectively, in subtraction.

REGISTER 5-2: STATUS: STATUS REGISTER

U-0	U-0	U-0	R/W-x	R/W-x	R/W-x	R/W-x	R/W-x
—	—	—	N	OV	Z	DC(1)	C(1)
bit 7							bit 0

Legend:			
R = Readable bit	W = Writable bit	U = Unimplemented bit, read as ‘0’	
-n = Value at POR	‘1’ = Bit is set	‘0’ = Bit is cleared	x = Bit is unknown

bit 7-5 **Unimplemented:** Read as ‘0’

bit 4 **N:** Negative bit
This bit is used for signed arithmetic (two’s complement). It indicates whether the result was negative (ALU MSB = 1).
1 = Result was negative
0 = Result was positive

bit 3 **OV:** Overflow bit
This bit is used for signed arithmetic (two’s complement). It indicates an overflow of the 7-bit magnitude which causes the sign bit (bit 7 of the result) to change state.
1 = Overflow occurred for signed arithmetic (in this arithmetic operation)
0 = No overflow occurred

bit 2 **Z:** Zero bit
1 = The result of an arithmetic or logic operation is zero
0 = The result of an arithmetic or logic operation is not zero

bit 1 **DC:** Digit Carry/$\overline{\text{Borrow}}$ bit (`ADDWF`, `ADDLW`, `SUBLW`, `SUBWF` instructions)(1)
1 = A carry-out from the 4th low-order bit of the result occurred
0 = No carry-out from the 4th low-order bit of the result

bit 0 **C:** Carry/$\overline{\text{Borrow}}$ bit (`ADDWF`, `ADDLW`, `SUBLW`, `SUBWF` instructions)(1)
1 = A carry-out from the Most Significant bit of the result occurred
0 = No carry-out from the Most Significant bit of the result occurred

Note 1: For $\overline{\text{Borrow}}$, the polarity is reversed. A subtraction is executed by adding the two’s complement of the second operand. For rotate (`RRF`, `RLF`) instructions, this bit is loaded with either the high-order or low-order bit of the source register.

© 2010 Microchip Technology Inc.

5.4 Data Addressing Modes

Note:	The execution of some instructions in the core PIC18 instruction set are changed when the PIC18 extended instruction set is enabled. See **Section 5.5 "Data Memory and the Extended Instruction Set"** for more information.

While the program memory can be addressed in only one way – through the program counter – information in the data memory space can be addressed in several ways. For most instructions, the addressing mode is fixed. Other instructions may use up to three modes, depending on which operands are used and whether or not the extended instruction set is enabled.

The addressing modes are:

- Inherent
- Literal
- Direct
- Indirect

An additional addressing mode, Indexed Literal Offset, is available when the extended instruction set is enabled (XINST Configuration bit = 1). Its operation is discussed in greater detail in **Section 5.5.1 "Indexed Addressing with Literal Offset"**.

5.4.1 INHERENT AND LITERAL ADDRESSING

Many PIC18 control instructions do not need any argument at all; they either perform an operation that globally affects the device or they operate implicitly on one register. This addressing mode is known as Inherent Addressing. Examples include SLEEP, RESET and DAW.

Other instructions work in a similar way but require an additional explicit argument in the opcode. This is known as Literal Addressing mode because they require some literal value as an argument. Examples include ADDLW and MOVLW, which respectively, add or move a literal value to the W register. Other examples include CALL and GOTO, which include a 20-bit program memory address.

5.4.2 DIRECT ADDRESSING

Direct addressing specifies all or part of the source and/or destination address of the operation within the opcode itself. The options are specified by the arguments accompanying the instruction.

In the core PIC18 instruction set, bit-oriented and byte-oriented instructions use some version of direct addressing by default. All of these instructions include some 8-bit literal address as their Least Significant Byte. This address specifies either a register address in one of the banks of data RAM (**Section 5.3.3 "General Purpose Register File"**) or a location in the Access Bank (**Section 5.3.2 "Access Bank"**) as the data source for the instruction.

The Access RAM bit 'a' determines how the address is interpreted. When 'a' is '1', the contents of the BSR (**Section 5.3.1 "Bank Select Register (BSR)"**) are used with the address to determine the complete 12-bit address of the register. When 'a' is '0', the address is interpreted as being a register in the Access Bank. Addressing that uses the Access RAM is sometimes also known as Direct Forced Addressing mode.

A few instructions, such as MOVFF, include the entire 12-bit address (either source or destination) in their opcodes. In these cases, the BSR is ignored entirely.

The destination of the operation's results is determined by the destination bit 'd'. When 'd' is '1', the results are stored back in the source register, overwriting its original contents. When 'd' is '0', the results are stored in the W register. Instructions without the 'd' argument have a destination that is implicit in the instruction; their destination is either the target register being operated on or the W register.

5.4.3 INDIRECT ADDRESSING

Indirect addressing allows the user to access a location in data memory without giving a fixed address in the instruction. This is done by using File Select Registers (FSRs) as pointers to the locations which are to be read or written. Since the FSRs are themselves located in RAM as Special File Registers, they can also be directly manipulated under program control. This makes FSRs very useful in implementing data structures, such as tables and arrays in data memory.

The registers for indirect addressing are also implemented with Indirect File Operands (INDFs) that permit automatic manipulation of the pointer value with auto-incrementing, auto-decrementing or offsetting with another value. This allows for efficient code, using loops, such as the example of clearing an entire RAM bank in Example 5-5.

EXAMPLE 5-5: HOW TO CLEAR RAM (BANK 1) USING INDIRECT ADDRESSING

```
        LFSR    FSR0, 100h ;
NEXT    CLRF    POSTINC0   ; Clear INDF
                           ; register then
                           ; inc pointer
        BTFSS   FSR0H, 1   ; All done with
                           ; Bank1?
        BRA     NEXT       ; NO, clear next
CONTINUE                   ; YES, continue
```

5.4.3.1 FSR Registers and the INDF Operand

At the core of indirect addressing are three sets of registers: FSR0, FSR1 and FSR2. Each represents a pair of 8-bit registers, FSRnH and FSRnL. Each FSR pair holds a 12-bit value, therefore the four upper bits of the FSRnH register are not used. The 12-bit FSR value can address the entire range of the data memory in a linear fashion. The FSR register pairs, then, serve as pointers to data memory locations.

Indirect addressing is accomplished with a set of Indirect File Operands, INDF0 through INDF2. These can be thought of as “virtual” registers: they are mapped in the SFR space but are not physically implemented. Reading or writing to a particular INDF register actually accesses its corresponding FSR register pair. A read from INDF1, for example, reads the data at the address indicated by FSR1H:FSR1L. Instructions that use the INDF registers as operands actually use the contents of their corresponding FSR as a pointer to the instruction’s target. The INDF operand is just a convenient way of using the pointer.

Because indirect addressing uses a full 12-bit address, data RAM banking is not necessary. Thus, the current contents of the BSR and the Access RAM bit have no effect on determining the target address.

5.4.3.2 FSR Registers and POSTINC, POSTDEC, PREINC and PLUSW

In addition to the INDF operand, each FSR register pair also has four additional indirect operands. Like INDF, these are “virtual” registers which cannot be directly read or written. Accessing these registers actually accesses the location to which the associated FSR register pair points, and also performs a specific action on the FSR value. They are:

- POSTDEC: accesses the location to which the FSR points, then automatically decrements the FSR by 1 afterwards
- POSTINC: accesses the location to which the FSR points, then automatically increments the FSR by 1 afterwards
- PREINC: automatically increments the FSR by 1, then uses the location to which the FSR points in the operation
- PLUSW: adds the signed value of the W register (range of -127 to 128) to that of the FSR and uses the location to which the result points in the operation.

In this context, accessing an INDF register uses the value in the associated FSR register without changing it. Similarly, accessing a PLUSW register gives the FSR value an offset by that in the W register; however, neither W nor the FSR is actually changed in the operation. Accessing the other virtual registers changes the value of the FSR register.

FIGURE 5-10: INDIRECT ADDRESSING

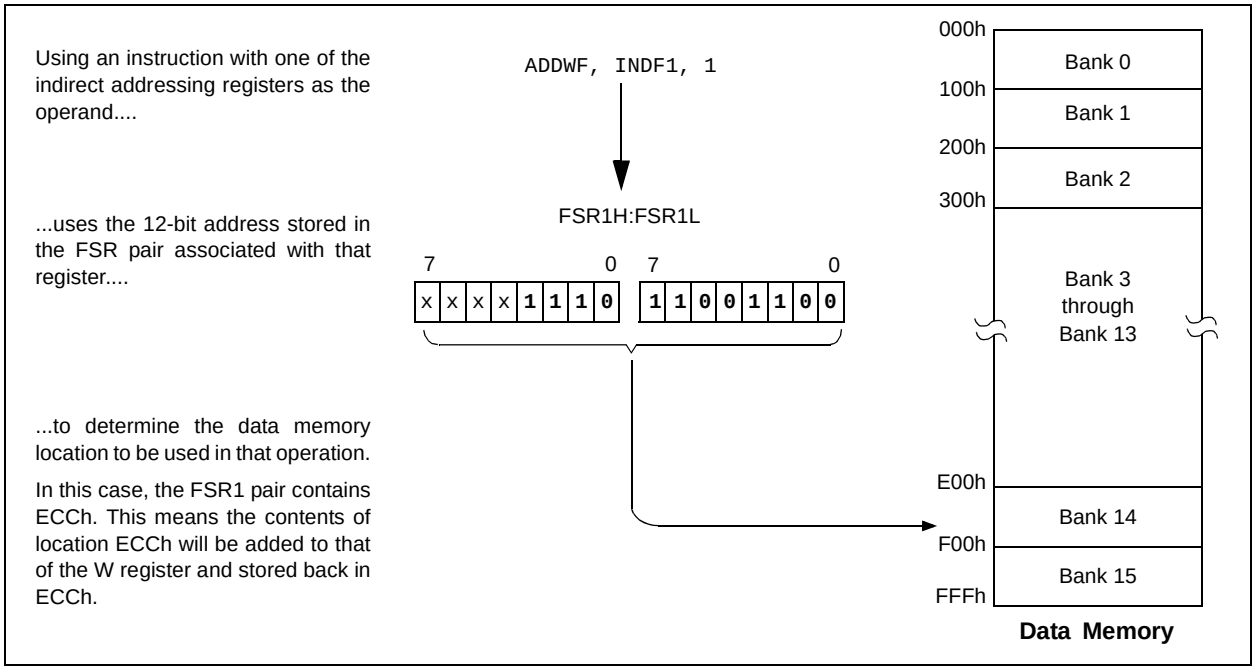

© 2010 Microchip Technology Inc.

Operations on the FSRs with POSTDEC, POSTINC and PREINC affect the entire register pair; that is, roll-overs of the FSRnL register from FFh to 00h carry over to the FSRnH register. On the other hand, results of these operations do not change the value of any flags in the STATUS register (e.g., Z, N, OV, etc.).

The PLUSW register can be used to implement a form of indexed addressing in the data memory space. By manipulating the value in the W register, users can reach addresses that are fixed offsets from pointer addresses. In some applications, this can be used to implement some powerful program control structure, such as software stacks, inside of data memory.

5.4.3.3 Operations by FSRs on FSRs

Indirect addressing operations that target other FSRs or virtual registers represent special cases. For example, using an FSR to point to one of the virtual registers will not result in successful operations. As a specific case, assume that FSR0H:FSR0L contains FE7h, the address of INDF1. Attempts to read the value of the INDF1 using INDF0 as an operand will return 00h. Attempts to write to INDF1 using INDF0 as the operand will result in a NOP.

On the other hand, using the virtual registers to write to an FSR pair may not occur as planned. In these cases, the value will be written to the FSR pair but without any incrementing or decrementing. Thus, writing to either the INDF2 or POSTDEC2 register will write the same value to the FSR2H:FSR2L.

Since the FSRs are physical registers mapped in the SFR space, they can be manipulated through all direct operations. Users should proceed cautiously when working on these registers, particularly if their code uses indirect addressing.

Similarly, operations by indirect addressing are generally permitted on all other SFRs. Users should exercise the appropriate caution that they do not inadvertently change settings that might affect the operation of the device.

5.5 Data Memory and the Extended Instruction Set

Enabling the PIC18 extended instruction set (XINST Configuration bit = 1) significantly changes certain aspects of data memory and its addressing. Specifically, the use of the Access Bank for many of the core PIC18 instructions is different; this is due to the introduction of a new addressing mode for the data memory space.

What does not change is just as important. The size of the data memory space is unchanged, as well as its linear addressing. The SFR map remains the same. Core PIC18 instructions can still operate in both Direct and Indirect Addressing mode; inherent and literal instructions do not change at all. Indirect addressing with FSR0 and FSR1 also remain unchanged.

5.5.1 INDEXED ADDRESSING WITH LITERAL OFFSET

Enabling the PIC18 extended instruction set changes the behavior of indirect addressing using the FSR2 register pair within Access RAM. Under the proper conditions, instructions that use the Access Bank – that is, most bit-oriented and byte-oriented instructions – can invoke a form of indexed addressing using an offset specified in the instruction. This special addressing mode is known as Indexed Addressing with Literal Offset, or Indexed Literal Offset mode.

When using the extended instruction set, this addressing mode requires the following:

- The use of the Access Bank is forced (‘a’ = 0) and
- The file address argument is less than or equal to 5Fh.

Under these conditions, the file address of the instruction is not interpreted as the lower byte of an address (used with the BSR in direct addressing), or as an 8-bit address in the Access Bank. Instead, the value is interpreted as an offset value to an Address Pointer, specified by FSR2. The offset and the contents of FSR2 are added to obtain the target address of the operation.

5.5.2 INSTRUCTIONS AFFECTED BY INDEXED LITERAL OFFSET MODE

Any of the core PIC18 instructions that can use direct addressing are potentially affected by the Indexed Literal Offset Addressing mode. This includes all byte-oriented and bit-oriented instructions, or almost one-half of the standard PIC18 instruction set. Instructions that only use Inherent or Literal Addressing modes are unaffected.

Additionally, byte-oriented and bit-oriented instructions are not affected if they do not use the Access Bank (Access RAM bit is ‘1’), or include a file address of 60h or above. Instructions meeting these criteria will continue to execute as before. A comparison of the different possible addressing modes when the extended instruction set is enabled is shown in Figure 5-11.

Those who desire to use byte-oriented or bit-oriented instructions in the Indexed Literal Offset mode should note the changes to assembler syntax for this mode. This is described in more detail in **Section 24.2.1 “Extended Instruction Syntax”**.

FIGURE 5-11: COMPARING ADDRESSING OPTIONS FOR BIT-ORIENTED AND BYTE-ORIENTED INSTRUCTIONS (EXTENDED INSTRUCTION SET ENABLED)

EXAMPLE INSTRUCTION: `ADDWF, f, d, a` (Opcode: `0010 01da ffff ffff`)

When 'a' = 0 and f ≥ 60h:

The instruction executes in Direct Forced mode. 'f' is interpreted as a location in the Access RAM between 060h and 0FFh. This is the same as locations F60h to FFFh (Bank 15) of data memory.

Locations below 60h are not available in this addressing mode.

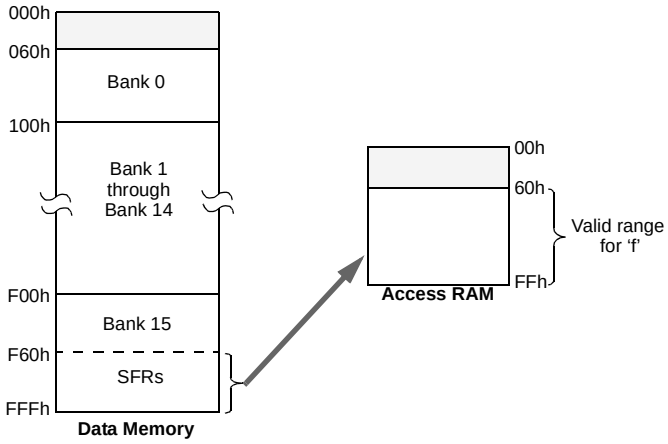

When 'a' = 0 and f ≤ 5Fh:

The instruction executes in Indexed Literal Offset mode. 'f' is interpreted as an offset to the address value in FSR2. The two are added together to obtain the address of the target register for the instruction. The address can be anywhere in the data memory space.

Note that in this mode, the correct syntax is now:
`ADDWF [k], d`
where 'k' is the same as 'f'.

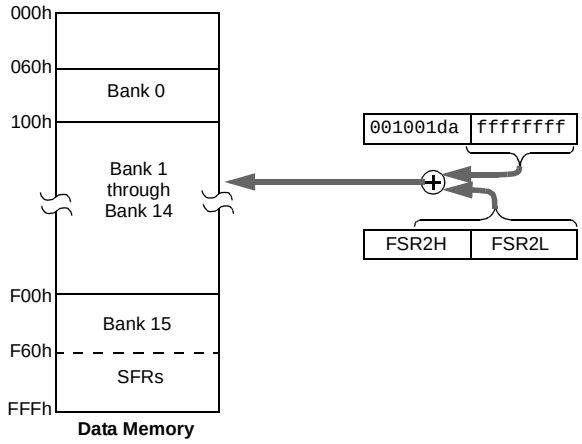

When 'a' = 1 (all values of f):

The instruction executes in Direct mode (also known as Direct Long mode). 'f' is interpreted as a location in one of the 16 banks of the data memory space. The bank is designated by the Bank Select Register (BSR). The address can be in any implemented bank in the data memory space.

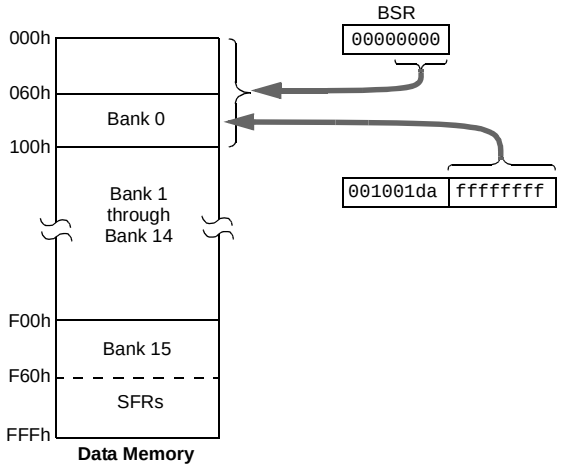

© 2010 Microchip Technology Inc.

5.5.3 MAPPING THE ACCESS BANK IN INDEXED LITERAL OFFSET MODE

The use of Indexed Literal Offset Addressing mode effectively changes how the first 96 locations of Access RAM (00h to 5Fh) are mapped. Rather than containing just the contents of the bottom section of Bank 0, this mode maps the contents from a user defined “window” that can be located anywhere in the data memory space. The value of FSR2 establishes the lower boundary of the addresses mapped into the window, while the upper boundary is defined by FSR2 plus 95 (5Fh). Addresses in the Access RAM above 5Fh are mapped as previously described (see **Section 5.3.2 “Access Bank”**). An example of Access Bank remapping in this addressing mode is shown in Figure 5-12.

Remapping of the Access Bank applies *only* to operations using the Indexed Literal Offset mode. Operations that use the BSR (Access RAM bit is ‘1’) will continue to use direct addressing as before.

5.6 PIC18 Instruction Execution and the Extended Instruction Set

Enabling the extended instruction set adds eight additional commands to the existing PIC18 instruction set. These instructions are executed as described in **Section 24.2 “Extended Instruction Set”**.

FIGURE 5-12: REMAPPING THE ACCESS BANK WITH INDEXED LITERAL OFFSET ADDRESSING

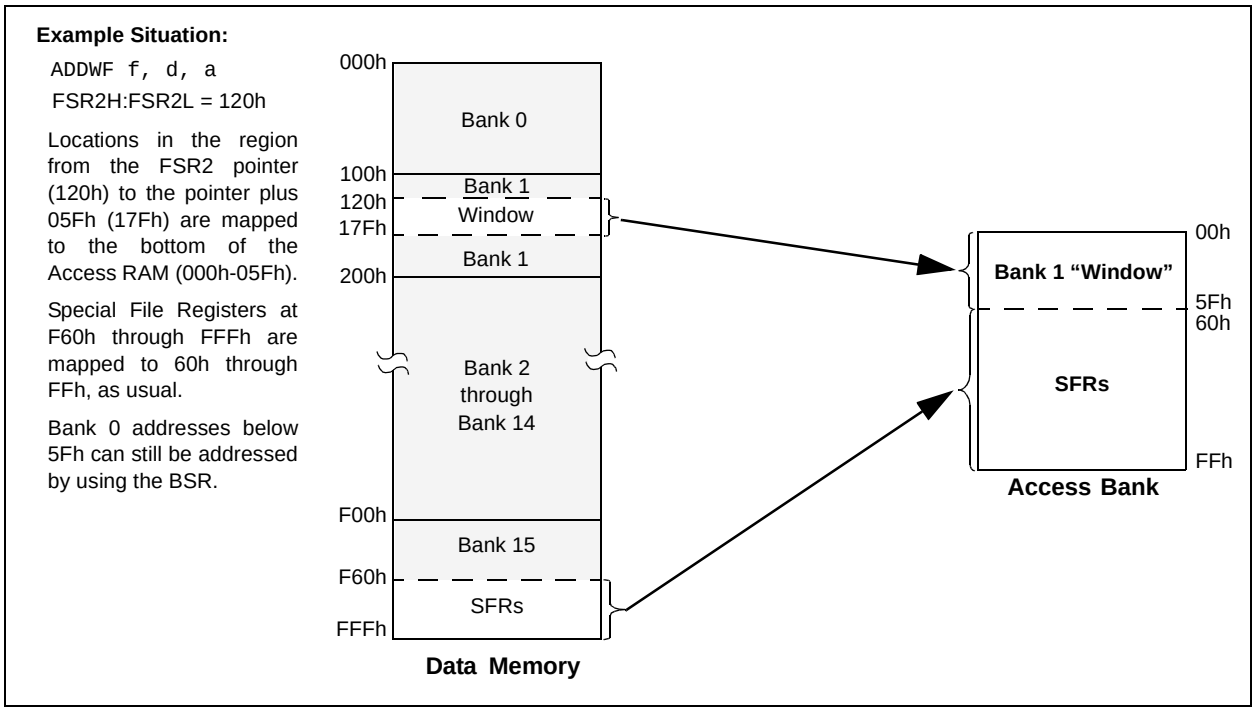

NOTES:

© 2010 Microchip Technology Inc.

6.0 FLASH PROGRAM MEMORY

The Flash program memory is readable, writable and erasable during normal operation over the entire VDD range.

A read from program memory is executed one byte at a time. A write to program memory is executed on blocks of 64, 32 or 16 bytes at a time, depending on the specific device (See Table 6-1). Program memory is erased in blocks of 64 bytes at a time. The difference between the write and erase block sizes requires from 1 to 4 block writes to restore the contents of a single block erase. A bulk erase operation cannot be issued from user code.

TABLE 6-1: WRITE/ERASE BLOCK SIZES

Device	Write Block Size (bytes)	Erase Block Size (bytes)
PIC18F43K20, PIC18F23K20	16	64
PIC18F24K20, PIC18F25K20, PIC18F44K20, PIC18F45K20	32	64
PIC18F26K20, PIC18F46K20	64	64

Writing or erasing program memory will cease instruction fetches until the operation is complete. The program memory cannot be accessed during the write or erase, therefore, code cannot execute. An internal programming timer terminates program memory writes and erases.

A value written to program memory does not need to be a valid instruction. Executing a program memory location that forms an invalid instruction results in a NOP.

6.1 Table Reads and Table Writes

In order to read and write program memory, there are two operations that allow the processor to move bytes between the program memory space and the data RAM:

- Table Read (TBLRD)
- Table Write (TBLWT)

The program memory space is 16 bits wide, while the data RAM space is 8 bits wide. Table reads and table writes move data between these two memory spaces through an 8-bit register (TABLAT).

The table read operation retrieves one byte of data directly from program memory and places it into the TABLAT register. Figure 6-1 shows the operation of a table read.

The table write operation stores one byte of data from the TABLAT register into a write block holding register. The procedure to write the contents of the holding registers into program memory is detailed in **Section 6.5 "Writing to Flash Program Memory"**. Figure 6-2 shows the operation of a table write with program memory and data RAM.

Table operations work with byte entities. Tables containing data, rather than program instructions, are not required to be word aligned. Therefore, a table can start and end at any byte address. If a table write is being used to write executable code into program memory, program instructions will need to be word aligned.

FIGURE 6-1: TABLE READ OPERATION

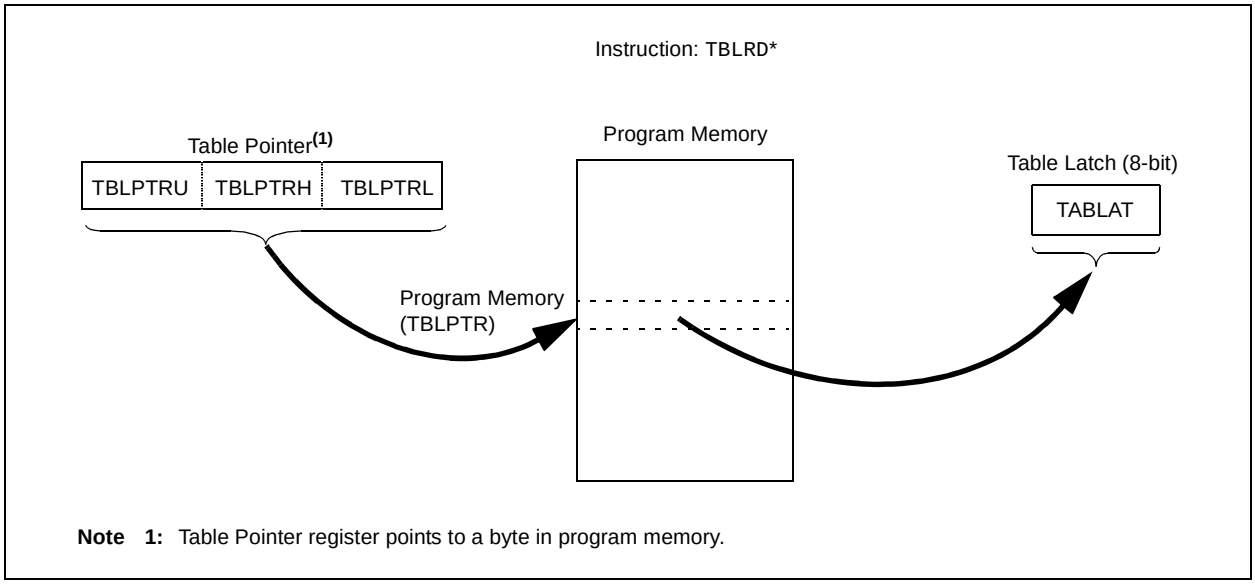

Note 1: Table Pointer register points to a byte in program memory.

FIGURE 6-2: TABLE WRITE OPERATION

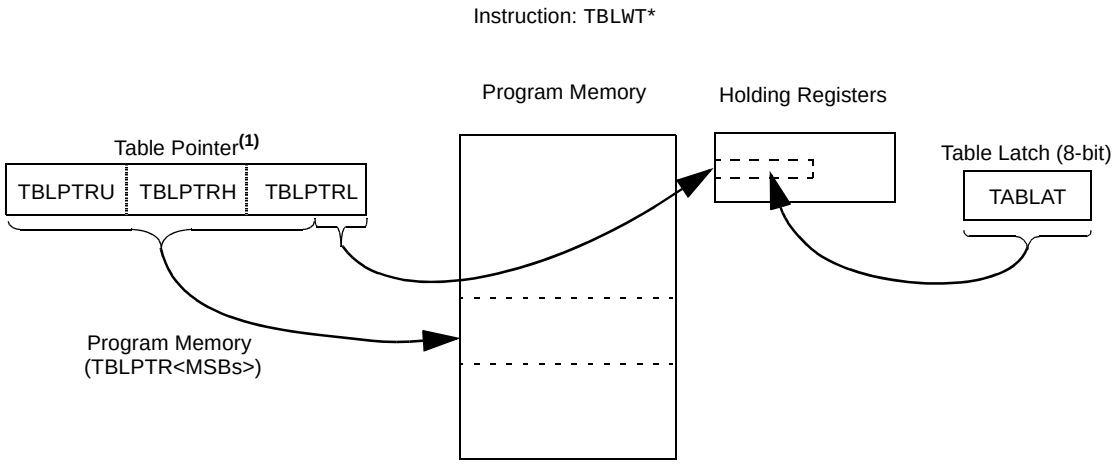

Note 1: During table writes the Table Pointer does not point directly to Program Memory. The LSBs of TBLPRTL actually point to an address within the write block holding registers. The MSBs of the Table Pointer determine where the write block will eventually be written. The process for writing the holding registers to the program memory array is discussed in **Section 6.5 "Writing to Flash Program Memory"**.

6.2 Control Registers

Several control registers are used in conjunction with the TBLRD and TBLWT instructions. These include the:

- EECON1 register
- EECON2 register
- TABLAT register
- TBLPTR registers

6.2.1 EECON1 AND EECON2 REGISTERS

The EECON1 register (Register 6-1) is the control register for memory accesses. The EECON2 register is not a physical register; it is used exclusively in the memory write and erase sequences. Reading EECON2 will read all '0's.

The EEPGD control bit determines if the access will be a program or data EEPROM memory access. When EEPGD is clear, any subsequent operations will operate on the data EEPROM memory. When EEPGD is set, any subsequent operations will operate on the program memory.

The CFGS control bit determines if the access will be to the Configuration/Calibration registers or to program memory/data EEPROM memory. When CFGS is set, subsequent operations will operate on Configuration registers regardless of EEPGD (see **Section 23.0 "Special Features of the CPU"**). When CFGS is clear, memory selection access is determined by EEPGD.

The FREE bit allows the program memory erase operation. When FREE is set, an erase operation is initiated on the next WR command. When FREE is clear, only writes are enabled.

The WREN bit, when set, will allow a write operation. The WREN bit is clear on power-up.

The WRERR bit is set by hardware when the WR bit is set and cleared when the internal programming timer expires and the write operation is complete.

Note:	During normal operation, the WRERR is read as '1'. This can indicate that a write operation was prematurely terminated by a Reset, or a write operation was attempted improperly.

The WR control bit initiates write operations. The WR bit cannot be cleared, only set, by firmware. Then WR bit is cleared by hardware at the completion of the write operation.

Note:	The EEIF interrupt flag bit of the PIR2 register is set when the write is complete. The EEIF flag stays set until cleared by firmware.

© 2010 Microchip Technology Inc.

REGISTER 6-1: EECON1: DATA EEPROM CONTROL 1 REGISTER

R/W-x	R/W-x	U-0	R/W-0	R/W-x	R/W-0	R/S-0	R/S-0
EEPGD	CFGS	—	FREE	WRERR	WREN	WR	RD
bit 7							bit 0

Legend:			
R = Readable bit	W = Writable bit		
S = Bit can be set by software, but not cleared		U = Unimplemented bit, read as '0'	
-n = Value at POR	'1' = Bit is set	'0' = Bit is cleared	x = Bit is unknown

bit 7 **EEPGD:** Flash Program or Data EEPROM Memory Select bit
- 1 = Access Flash program memory
- 0 = Access data EEPROM memory

bit 6 **CFGS:** Flash Program/Data EEPROM or Configuration Select bit
- 1 = Access Configuration registers
- 0 = Access Flash program or data EEPROM memory

bit 5 **Unimplemented:** Read as '0'

bit 4 **FREE:** Flash Row (Block) Erase Enable bit
- 1 = Erase the program memory block addressed by TBLPTR on the next WR command (cleared by completion of erase operation)
- 0 = Perform write-only

bit 3 **WRERR:** Flash Program/Data EEPROM Error Flag bit(1)
- 1 = A write operation is prematurely terminated (any Reset during self-timed programming in normal operation, or an improper write attempt)
- 0 = The write operation completed

bit 2 **WREN:** Flash Program/Data EEPROM Write Enable bit
- 1 = Allows write cycles to Flash program/data EEPROM
- 0 = Inhibits write cycles to Flash program/data EEPROM

bit 1 **WR:** Write Control bit
- 1 = Initiates a data EEPROM erase/write cycle or a program memory erase cycle or write cycle. (The operation is self-timed and the bit is cleared by hardware once write is complete. The WR bit can only be set (not cleared) by software.)
- 0 = Write cycle to the EEPROM is complete

bit 0 **RD:** Read Control bit
- 1 = Initiates an EEPROM read (Read takes one cycle. RD is cleared by hardware. The RD bit can only be set (not cleared) by software. RD bit cannot be set when EEPGD = 1 or CFGS = 1.)
- 0 = Does not initiate an EEPROM read

Note 1: When a WRERR occurs, the EEPGD and CFGS bits are not cleared. This allows tracing of the error condition.

6.2.2 TABLAT – TABLE LATCH REGISTER

The Table Latch (TABLAT) is an 8-bit register mapped into the SFR space. The Table Latch register is used to hold 8-bit data during data transfers between program memory and data RAM.

6.2.3 TBLPTR – TABLE POINTER REGISTER

The Table Pointer (TBLPTR) register addresses a byte within the program memory. The TBLPTR is comprised of three SFR registers: Table Pointer Upper Byte, Table Pointer High Byte and Table Pointer Low Byte (TBLPTRU:TBLPTRH:TBLPTRL). These three registers join to form a 22-bit wide pointer. The low-order 21 bits allow the device to address up to 2 Mbytes of program memory space. The 22nd bit allows access to the device ID, the user ID and the Configuration bits.

The Table Pointer register, TBLPTR, is used by the TBLRD and TBLWT instructions. These instructions can update the TBLPTR in one of four ways based on the table operation. These operations are shown in Table 6-2. These operations on the TBLPTR affect only the low-order 21 bits.

6.2.4 TABLE POINTER BOUNDARIES

TBLPTR is used in reads, writes and erases of the Flash program memory.

When a TBLRD is executed, all 22 bits of the TBLPTR determine which byte is read from program memory directly into the TABLAT register.

When a TBLWT is executed the byte in the TABLAT register is written, not to Flash memory but, to a holding register in preparation for a program memory write. The holding registers constitute a write block which varies depending on the device (See Table 6-1).The 3, 4, or 5 LSbs of the TBLPTRL register determine which specific address within the holding register block is written to. The MSBs of the Table Pointer have no effect during TBLWT operations.

When a program memory write is executed the entire holding register block is written to the Flash memory at the address determined by the MSbs of the TBLPTR. The 3, 4, or 5 LSBs are ignored during Flash memory writes. For more detail, see **Section 6.5 “Writing to Flash Program Memory”**.

When an erase of program memory is executed, the 16 MSbs of the Table Pointer register (TBLPTR<21:6>) point to the 64-byte block that will be erased. The Least Significant bits (TBLPTR<5:0>) are ignored.

Figure 6-3 describes the relevant boundaries of TBLPTR based on Flash program memory operations.

TABLE 6-2: TABLE POINTER OPERATIONS WITH TBLRD AND TBLWT INSTRUCTIONS

Example	Operation on Table Pointer
TBLRD* TBLWT*	TBLPTR is not modified
TBLRD*+ TBLWT*+	TBLPTR is incremented after the read/write
TBLRD*- TBLWT*-	TBLPTR is decremented after the read/write
TBLRD+* TBLWT+*	TBLPTR is incremented before the read/write

FIGURE 6-3: TABLE POINTER BOUNDARIES BASED ON OPERATION

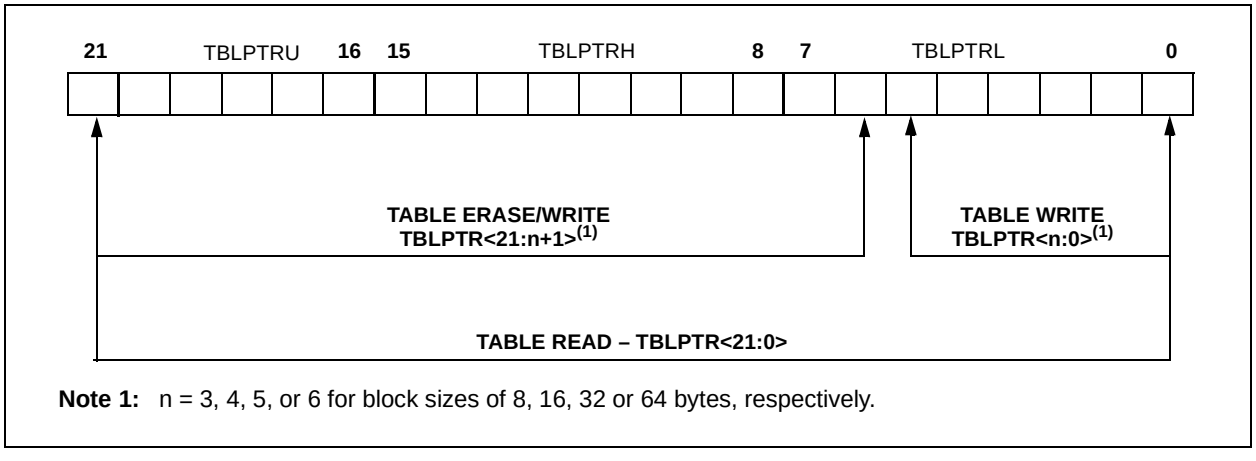

Note 1: n = 3, 4, 5, or 6 for block sizes of 8, 16, 32 or 64 bytes, respectively.

© 2010 Microchip Technology Inc.

6.3 Reading the Flash Program Memory

The TBLRD instruction retrieves data from program memory and places it into data RAM. Table reads from program memory are performed one byte at a time.

TBLPTR points to a byte address in program space. Executing TBLRD places the byte pointed to into TABLAT. In addition, TBLPTR can be modified automatically for the next table read operation.

The internal program memory is typically organized by words. The Least Significant bit of the address selects between the high and low bytes of the word. Figure 6-4 shows the interface between the internal program memory and the TABLAT.

FIGURE 6-4: READS FROM FLASH PROGRAM MEMORY

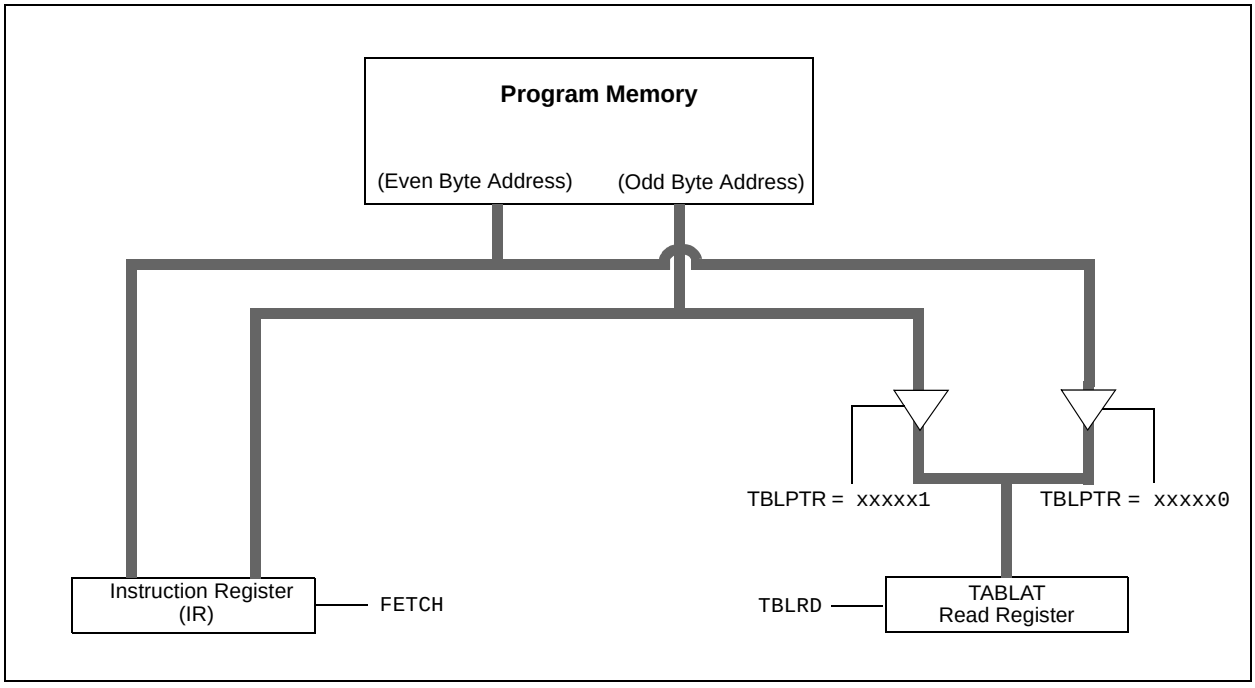

EXAMPLE 6-1: READING A FLASH PROGRAM MEMORY WORD

```
            MOVLW     CODE_ADDR_UPPER         ; Load TBLPTR with the base
            MOVWF     TBLPTRU                 ; address of the word
            MOVLW     CODE_ADDR_HIGH
            MOVWF     TBLPTRH
            MOVLW     CODE_ADDR_LOW
            MOVWF     TBLPTRL
READ_WORD
            TBLRD*+                           ; read into TABLAT and increment
            MOVF      TABLAT, W               ; get data
            MOVWF     WORD_EVEN
            TBLRD*+                           ; read into TABLAT and increment
            MOVFW     TABLAT, W               ; get data
            MOVF      WORD_ODD
```

6.4 Erasing Flash Program Memory

The minimum erase block is 32 words or 64 bytes. Only through the use of an external programmer, or through ICSP™ control, can larger blocks of program memory be bulk erased. Word erase in the Flash array is not supported.

When initiating an erase sequence from the Microcontroller itself, a block of 64 bytes of program memory is erased. The Most Significant 16 bits of the TBLPTR<21:6> point to the block being erased. The TBLPTR<5:0> bits are ignored.

The EECON1 register commands the erase operation. The EEPGD bit must be set to point to the Flash program memory. The WREN bit must be set to enable write operations. The FREE bit is set to select an erase operation.

The write initiate sequence for EECON2, shown as steps 4 through 6 in **Section 6.4.1 "Flash Program Memory Erase Sequence"**, is used to guard against accidental writes. This is sometimes referred to as a long write.

A long write is necessary for erasing the internal Flash. Instruction execution is halted during the long write cycle. The long write is terminated by the internal programming timer.

6.4.1 FLASH PROGRAM MEMORY ERASE SEQUENCE

The sequence of events for erasing a block of internal program memory is:

1. Load Table Pointer register with address of block being erased.
2. Set the EECON1 register for the erase operation:
   - set EEPGD bit to point to program memory;
   - clear the CFGS bit to access program memory;
   - set WREN bit to enable writes;
   - set FREE bit to enable the erase.
3. Disable interrupts.
4. Write 55h to EECON2.
5. Write 0AAh to EECON2.
6. Set the WR bit. This will begin the block erase cycle.
7. The CPU will stall for duration of the erase (about 2 ms using internal timer).
8. Re-enable interrupts.

EXAMPLE 6-2: ERASING A FLASH PROGRAM MEMORY BLOCK

```
                    MOVLW   CODE_ADDR_UPPER         ; load TBLPTR with the base
                    MOVWF   TBLPTRU                 ; address of the memory block
                    MOVLW   CODE_ADDR_HIGH
                    MOVWF   TBLPTRH
                    MOVLW   CODE_ADDR_LOW
                    MOVWF   TBLPTRL
          ERASE_BLOCK
                    BSF     EECON1, EEPGD           ; point to Flash program memory
                    BCF     EECON1, CFGS            ; access Flash program memory
                    BSF     EECON1, WREN            ; enable write to memory
                    BSF     EECON1, FREE            ; enable block Erase operation
                    BCF     INTCON, GIE             ; disable interrupts
     Required       MOVLW   55h
     Sequence       MOVWF   EECON2                  ; write 55h
                    MOVLW   0AAh
                    MOVWF   EECON2                  ; write 0AAh
                    BSF     EECON1, WR              ; start erase (CPU stall)
                    BSF     INTCON, GIE             ; re-enable interrupts
```


© 2010 Microchip Technology Inc.

6.5 Writing to Flash Program Memory

The programming block size is 16, 32 or 64 bytes, depending on the device (See Table 6-1). Word or byte programming is not supported.

Table writes are used internally to load the holding registers needed to program the Flash memory. There are only as many holding registers as there are bytes in a write block (See Table 6-1).

Since the Table Latch (TABLAT) is only a single byte, the TBLWT instruction may need to be executed 16, 32 or 64 times, depending on the device, for each programming operation. All of the table write operations will essentially be short writes because only the holding registers are written. After all the holding registers have been written, the programming operation of that block of memory is started by configuring the EECON1 register for a program memory write and performing the long write sequence.

The long write is necessary for programming the internal Flash. Instruction execution is halted during a long write cycle. The long write will be terminated by the internal programming timer.

The EEPROM on-chip timer controls the write time. The write/erase voltages are generated by an on-chip charge pump, rated to operate over the voltage range of the device.

Note:	The default value of the holding registers on device Resets and after write operations is FFh. A write of FFh to a holding register does not modify that byte. This means that individual bytes of program memory may be modified, provided that the change does not attempt to change any bit from a '0' to a '1'. When modifying individual bytes, it is not necessary to load all holding registers before executing a long write operation.

FIGURE 6-5: TABLE WRITES TO FLASH PROGRAM MEMORY

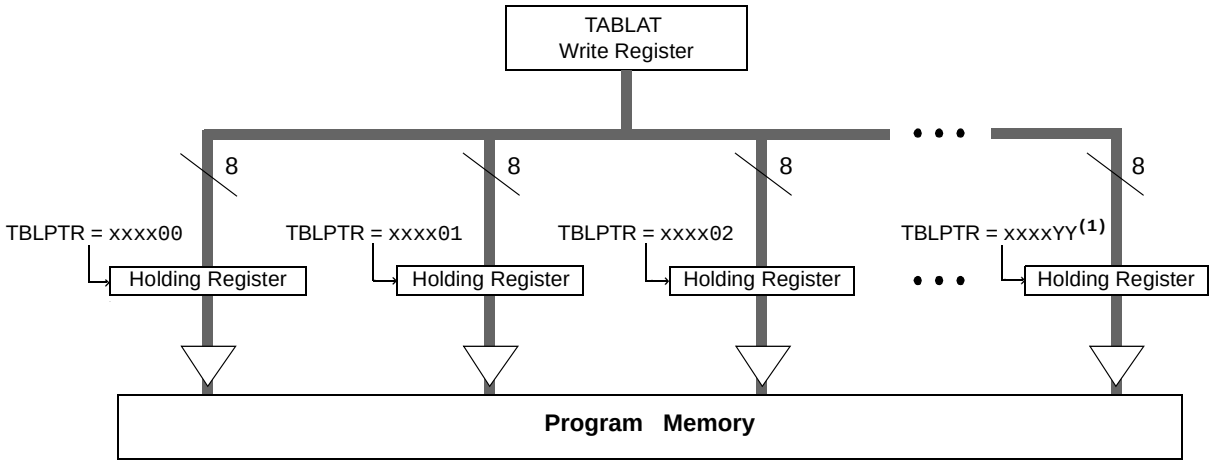

Note 1: YY = x7, xF, or 1F for 8, 16 or 32 byte write blocks, respectively.

6.5.1 FLASH PROGRAM MEMORY WRITE SEQUENCE

The sequence of events for programming an internal program memory location should be:

1. Read 64 bytes into RAM.
2. Update data values in RAM as necessary.
3. Load Table Pointer register with address being erased.
4. Execute the block erase procedure.
5. Load Table Pointer register with address of first byte being written.
6. Write the 16, 32 or 64 byte block into the holding registers with auto-increment.
7. Set the EECON1 register for the write operation:
   - set EEPGD bit to point to program memory;
   - clear the CFGS bit to access program memory;
   - set WREN to enable byte writes.
8. Disable interrupts.
9. Write 55h to EECON2.
10. Write 0AAh to EECON2.
11. Set the WR bit. This will begin the write cycle.
12. The CPU will stall for duration of the write (about 2 ms using internal timer).
13. Re-enable interrupts.
14. Repeat steps 6 to 13 for each block until all 64 bytes are written.
15. Verify the memory (table read).

This procedure will require about 6 ms to update each write block of memory. An example of the required code is given in Example 6-3.

Note:	Before setting the WR bit, the Table Pointer address needs to be within the intended address range of the bytes in the holding registers.

EXAMPLE 6-3: WRITING TO FLASH PROGRAM MEMORY

```
                    MOVLW     D'64'                   ; number of bytes in erase block
                    MOVWF     COUNTER
                    MOVLW     BUFFER_ADDR_HIGH        ; point to buffer
                    MOVWF     FSR0H
                    MOVLW     BUFFER_ADDR_LOW
                    MOVWF     FSR0L
                    MOVLW     CODE_ADDR_UPPER         ; Load TBLPTR with the base
                    MOVWF     TBLPTRU                 ; address of the memory block
                    MOVLW     CODE_ADDR_HIGH
                    MOVWF     TBLPTRH
                    MOVLW     CODE_ADDR_LOW
                    MOVWF     TBLPTRL
READ_BLOCK
                    TBLRD*+                           ; read into TABLAT, and inc
                    MOVF      TABLAT, W               ; get data
                    MOVWF     POSTINC0                ; store data
                    DECFSZ    COUNTER                 ; done?
                    BRA       READ_BLOCK              ; repeat
MODIFY_WORD
                    MOVLW     BUFFER_ADDR_HIGH        ; point to buffer
                    MOVWF     FSR0H
                    MOVLW     BUFFER_ADDR_LOW
                    MOVWF     FSR0L
                    MOVLW     NEW_DATA_LOW            ; update buffer word
                    MOVWF     POSTINC0
                    MOVLW     NEW_DATA_HIGH
                    MOVWF     INDF0
ERASE_BLOCK
                    MOVLW     CODE_ADDR_UPPER         ; load TBLPTR with the base
                    MOVWF     TBLPTRU                 ; address of the memory block
                    MOVLW     CODE_ADDR_HIGH
                    MOVWF     TBLPTRH
                    MOVLW     CODE_ADDR_LOW
                    MOVWF     TBLPTRL
                    BSF       EECON1, EEPGD           ; point to Flash program memory
                    BCF       EECON1, CFGS            ; access Flash program memory
                    BSF       EECON1, WREN            ; enable write to memory
                    BSF       EECON1, FREE            ; enable Erase operation
                    BCF       INTCON, GIE             ; disable interrupts
                    MOVLW     55h
Required            MOVWF     EECON2                  ; write 55h
Sequence            MOVLW     0AAh
                    MOVWF     EECON2                  ; write 0AAh
                    BSF       EECON1, WR              ; start erase (CPU stall)
                    BSF       INTCON, GIE             ; re-enable interrupts
                    TBLRD*-                           ; dummy read decrement
                    MOVLW     BUFFER_ADDR_HIGH        ; point to buffer
                    MOVWF     FSR0H
                    MOVLW     BUFFER_ADDR_LOW
                    MOVWF     FSR0L
WRITE_BUFFER_BACK
                    MOVLW     BlockSize               ; number of bytes in holding register
                    MOVWF     COUNTER
                    MOVLW     D'64'/BlockSize         ; number of write blocks in 64 bytes
                    MOVWF     COUNTER2
WRITE_BYTE_TO_HREGS
                    MOVF      POSTINC0, W             ; get low byte of buffer data
                    MOVWF     TABLAT                  ; present data to table latch
                    TBLWT+*                           ; write data, perform a short write
                                                      ; to internal TBLWT holding register.
```


© 2010 Microchip Technology Inc.

EXAMPLE 6-3: WRITING TO FLASH PROGRAM MEMORY (CONTINUED)

```
                DECFSZ  COUNTER                 ; loop until holding registers are full
                BRA     WRITE_WORD_TO_HREGS
PROGRAM_MEMORY
                BSF     EECON1, EEPGD           ; point to Flash program memory
                BCF     EECON1, CFGS            ; access Flash program memory
                BSF     EECON1, WREN            ; enable write to memory
                BCF     INTCON, GIE             ; disable interrupts
                MOVLW   55h
    Required    MOVWF   EECON2                  ; write 55h
    Sequence    MOVLW   0AAh
                MOVWF   EECON2                  ; write 0AAh
                BSF     EECON1, WR              ; start program (CPU stall)
                DCFSZ   COUNTER2                ; repeat for remaining write blocks
                BRA     WRITE_BYTE_TO_HREGS     ;
                BSF     INTCON, GIE             ; re-enable interrupts
                BCF     EECON1, WREN            ; disable write to memory
```

6.5.2 WRITE VERIFY

Depending on the application, good programming practice may dictate that the value written to the memory should be verified against the original value. This should be used in applications where excessive writes can stress bits near the specification limit.

6.5.3 UNEXPECTED TERMINATION OF WRITE OPERATION

If a write is terminated by an unplanned event, such as loss of power or an unexpected Reset, the memory location just programmed should be verified and reprogrammed if needed. If the write operation is interrupted by a $\overline{\text{MCLR}}$ Reset or a WDT Time-out Reset during normal operation, the WRERR bit will be set which the user can check to decide whether a rewrite of the location(s) is needed.

6.5.4 PROTECTION AGAINST SPURIOUS WRITES

To protect against spurious writes to Flash program memory, the write initiate sequence must also be followed. See **Section 23.0 "Special Features of the CPU"** for more detail.

6.6 Flash Program Operation During Code Protection

See **Section 23.3 "Program Verification and Code Protection"** for details on code protection of Flash program memory.

TABLE 6-3: REGISTERS ASSOCIATED WITH PROGRAM FLASH MEMORY

Name	Bit 7	Bit 6	Bit 5	Bit 4	Bit 3	Bit 2	Bit 1	Bit 0	Reset Values on page
TBLPTRU	—	—	bit 21	Program Memory Table Pointer Upper Byte (TBLPTR<20:16>)					59
TBPLTRH	Program Memory Table Pointer High Byte (TBLPTR<15:8>)								59
TBLPTRL	Program Memory Table Pointer Low Byte (TBLPTR<7:0>)								59
TABLAT	Program Memory Table Latch								59
INTCON	GIE/GIEH	PEIE/GIEL	TMR0IE	INT0IE	RBIE	TMR0IF	INT0IF	RBIF	59
EECON2	EEPROM Control Register 2 (not a physical register)								61
EECON1	EEPGD	CFGS	—	FREE	WRERR	WREN	WR	RD	61
IPR2	OSCFIP	C1IP	C2IP	EEIP	BCLIP	HLVDIP	TMR3IP	CCP2IP	62
PIR2	OSCFIF	C1IF	C2IF	EEIF	BCLIF	HLVDIF	TMR3IF	CCP2IF	62
PIE2	OSCFIE	C1IE	C2IE	EEIE	BCLIE	HLVDIE	TMR3IE	CCP2IE	62

Legend: — = unimplemented, read as '0'. Shaded cells are not used during Flash/EEPROM access.

NOTES:

© 2010 Microchip Technology Inc.

7.0 DATA EEPROM MEMORY

The data EEPROM is a nonvolatile memory array, separate from the data RAM and program memory, which is used for long-term storage of program data. It is not directly mapped in either the register file or program memory space but is indirectly addressed through the Special Function Registers (SFRs). The EEPROM is readable and writable during normal operation over the entire VDD range.

Four SFRs are used to read and write to the data EEPROM as well as the program memory. They are:

- EECON1
- EECON2
- EEDATA
- EEADR
- EEADRH

The data EEPROM allows byte read and write. When interfacing to the data memory block, EEDATA holds the 8-bit data for read/write and the EEADR:EEADRH register pair hold the address of the EEPROM location being accessed.

The EEPROM data memory is rated for high erase/write cycle endurance. A byte write automatically erases the location and writes the new data (erase-before-write). The write time is controlled by an on-chip timer; it will vary with voltage and temperature as well as from chip-to-chip. Please refer to parameter D122 (Table 26.10 in **Section 26.0 "Electrical Characteristics"**) for exact limits.

7.1 EEADR and EEADRH Registers

The EEADR register is used to address the data EEPROM for read and write operations. The 8-bit range of the register can address a memory range of 256 bytes (00h to FFh). The EEADRH register expands the range to 1024 bytes by adding an additional two address bits.

7.2 EECON1 and EECON2 Registers

Access to the data EEPROM is controlled by two registers: EECON1 and EECON2. These are the same registers which control access to the program memory and are used in a similar manner for the data EEPROM.

The EECON1 register (Register 7-1) is the control register for data and program memory access. Control bit EEPGD determines if the access will be to program or data EEPROM memory. When the EEPGD bit is clear, operations will access the data EEPROM memory. When the EEPGD bit is set, program memory is accessed.

Control bit, CFGS, determines if the access will be to the Configuration registers or to program memory/data EEPROM memory. When the CFGS bit is set, subsequent operations access Configuration registers. When the CFGS bit is clear, the EEPGD bit selects either program Flash or data EEPROM memory.

The WREN bit, when set, will allow a write operation. On power-up, the WREN bit is clear.

The WRERR bit is set by hardware when the WR bit is set and cleared when the internal programming timer expires and the write operation is complete.

Note:	During normal operation, the WRERR may read as '1'. This can indicate that a write operation was prematurely terminated by a Reset, or a write operation was attempted improperly.

The WR control bit initiates write operations. The bit can be set but not cleared by software. It is cleared only by hardware at the completion of the write operation.

Note:	The EEIF interrupt flag bit of the PIR2 register is set when the write is complete. It must be cleared by software.

Control bits, RD and WR, start read and erase/write operations, respectively. These bits are set by firmware and cleared by hardware at the completion of the operation.

The RD bit cannot be set when accessing program memory (EEPGD = 1). Program memory is read using table read instructions. See **Section 6.1 "Table Reads and Table Writes"** regarding table reads.

The EECON2 register is not a physical register. It is used exclusively in the memory write and erase sequences. Reading EECON2 will read all '0's.

REGISTER 7-1: EECON1: DATA EEPROM CONTROL 1 REGISTER

R/W-x	R/W-x	U-0	R/W-0	R/W-x	R/W-0	R/S-0	R/S-0
EEPGD	CFGS	—	FREE	WRERR	WREN	WR	RD
bit 7							bit 0

Legend:			
R = Readable bit	W = Writable bit		
S = Bit can be set by software, but not cleared		U = Unimplemented bit, read as '0'	
-n = Value at POR	'1' = Bit is set	'0' = Bit is cleared	x = Bit is unknown

bit 7 **EEPGD:** Flash Program or Data EEPROM Memory Select bit
- 1 = Access Flash program memory
- 0 = Access data EEPROM memory

bit 6 **CFGS:** Flash Program/Data EEPROM or Configuration Select bit
- 1 = Access Configuration registers
- 0 = Access Flash program or data EEPROM memory

bit 5 **Unimplemented:** Read as '0'

bit 4 **FREE:** Flash Row (Block) Erase Enable bit
- 1 = Erase the program memory block addressed by TBLPTR on the next WR command (cleared by completion of erase operation)
- 0 = Perform write-only

bit 3 **WRERR:** Flash Program/Data EEPROM Error Flag bit(1)
- 1 = A write operation is prematurely terminated (any Reset during self-timed programming in normal operation, or an improper write attempt)
- 0 = The write operation completed

bit 2 **WREN:** Flash Program/Data EEPROM Write Enable bit
- 1 = Allows write cycles to Flash program/data EEPROM
- 0 = Inhibits write cycles to Flash program/data EEPROM

bit 1 **WR:** Write Control bit
- 1 = Initiates a data EEPROM erase/write cycle or a program memory erase cycle or write cycle. (The operation is self-timed and the bit is cleared by hardware once write is complete. The WR bit can only be set (not cleared) by software.)
- 0 = Write cycle to the EEPROM is complete

bit 0 **RD:** Read Control bit
- 1 = Initiates an EEPROM read (Read takes one cycle. RD is cleared by hardware. The RD bit can only be set (not cleared) by software. RD bit cannot be set when EEPGD = 1 or CFGS = 1.)
- 0 = Does not initiate an EEPROM read

Note 1: When a WRERR occurs, the EEPGD and CFGS bits are not cleared. This allows tracing of the error condition.

© 2010 Microchip Technology Inc.

7.3 Reading the Data EEPROM Memory

To read a data memory location, the user must write the address to the EEADR register, clear the EEPGD control bit of the EECON1 register and then set control bit, RD. The data is available on the very next instruction cycle; therefore, the EEDATA register can be read by the next instruction. EEDATA will hold this value until another read operation, or until it is written to by the user (during a write operation).

The basic process is shown in Example 7-1.

7.4 Writing to the Data EEPROM Memory

To write an EEPROM data location, the address must first be written to the EEADR register and the data written to the EEDATA register. The sequence in Example 7-2 must be followed to initiate the write cycle.

The write will not begin if this sequence is not exactly followed (write 55h to EECON2, write 0AAh to EECON2, then set WR bit) for each byte. It is strongly recommended that interrupts be disabled during this code segment.

Additionally, the WREN bit in EECON1 must be set to enable writes. This mechanism prevents accidental writes to data EEPROM due to unexpected code execution (i.e., runaway programs). The WREN bit should be kept clear at all times, except when updating the EEPROM. The WREN bit is not cleared by hardware.

After a write sequence has been initiated, EECON1, EEADR and EEDATA cannot be modified. The WR bit will be inhibited from being set unless the WREN bit is set. Both WR and WREN cannot be set with the same instruction.

At the completion of the write cycle, the WR bit is cleared by hardware and the EEPROM Interrupt Flag bit, EEIF, is set. The user may either enable this interrupt or poll this bit. EEIF must be cleared by software.

7.5 Write Verify

Depending on the application, good programming practice may dictate that the value written to the memory should be verified against the original value. This should be used in applications where excessive writes can stress bits near the specification limit.

EXAMPLE 7-1: DATA EEPROM READ

```
        MOVLW   DATA_EE_ADDR   ;
        MOVWF   EEADR          ; Data Memory Address to read
        BCF     EECON1, EEPGD  ; Point to DATA memory
        BCF     EECON1, CFGS   ; Access EEPROM
        BSF     EECON1, RD     ; EEPROM Read
        MOVF    EEDATA, W      ; W = EEDATA
```

EXAMPLE 7-2: DATA EEPROM WRITE

```
                MOVLW   DATA_EE_ADDR_LOW   ;
                MOVWF   EEADR              ; Data Memory Address to write
                MOVLW   DATA_EE_ADDR_HI    ;
                MOVWF   EEADRH             ;
                MOVLW   DATA_EE_DATA       ;
                MOVWF   EEDATA             ; Data Memory Value to write
                BCF     EECON1, EEPGD      ; Point to DATA memory
                BCF     EECON1, CFGS       ; Access EEPROM
                BSF     EECON1, WREN       ; Enable writes
                BCF     INTCON, GIE        ; Disable Interrupts
                MOVLW   55h                ;
Required        MOVWF   EECON2             ; Write 55h
Sequence        MOVLW   0AAh               ;
                MOVWF   EECON2             ; Write 0AAh
                BSF     EECON1, WR         ; Set WR bit to begin write
                BSF     INTCON, GIE        ; Enable Interrupts

                                           ; User code execution
                BCF     EECON1, WREN       ; Disable writes on write complete (EEIF set)
```

7.6 Operation During Code-Protect

Data EEPROM memory has its own code-protect bits in Configuration Words. External read and write operations are disabled if code protection is enabled.

The microcontroller itself can both read and write to the internal data EEPROM, regardless of the state of the code-protect Configuration bit. Refer to **Section 23.0 "Special Features of the CPU"** for additional information.

7.7 Protection Against Spurious Write

There are conditions when the user may not want to write to the data EEPROM memory. To protect against spurious EEPROM writes, various mechanisms have been implemented. On power-up, the WREN bit is cleared. In addition, writes to the EEPROM are blocked during the Power-up Timer period (TPWRT, parameter 33).

The write initiate sequence and the WREN bit together help prevent an accidental write during brown-out, power glitch or software malfunction.

7.8 Using the Data EEPROM

The data EEPROM is a high-endurance, byte addressable array that has been optimized for the storage of frequently changing information (e.g., program variables or other data that are updated often). When variables in one section change frequently, while variables in another section do not change, it is possible to exceed the total number of write cycles to the EEPROM (specification D124) without exceeding the total number of write cycles to a single byte (specification D120). If this is the case, then an array refresh must be performed. For this reason, variables that change infrequently (such as constants, IDs, calibration, etc.) should be stored in Flash program memory.

A simple data EEPROM refresh routine is shown in Example 7-3.

Note:	If data EEPROM is only used to store constants and/or data that changes rarely, an array refresh is likely not required. See specification.

EXAMPLE 7-3: DATA EEPROM REFRESH ROUTINE

```
        CLRF    EEADR               ; Start at address 0
        BCF     EECON1, CFGS        ; Set for memory
        BCF     EECON1, EEPGD       ; Set for Data EEPROM
        BCF     INTCON, GIE         ; Disable interrupts
        BSF     EECON1, WREN        ; Enable writes
Loop                                ; Loop to refresh array
        BSF     EECON1, RD          ; Read current address
        MOVLW   55h                 ;
        MOVWF   EECON2              ; Write 55h
        MOVLW   0AAh                ;
        MOVWF   EECON2              ; Write 0AAh
        BSF     EECON1, WR          ; Set WR bit to begin write
        BTFSC   EECON1, WR          ; Wait for write to complete
        BRA     $-2
        INCFSZ  EEADR, F            ; Increment address
        BRA     LOOP                ; Not zero, do it again

        BCF     EECON1, WREN        ; Disable writes
        BSF     INTCON, GIE         ; Enable interrupts
```


© 2010 Microchip Technology Inc.

TABLE 7-1: REGISTERS ASSOCIATED WITH DATA EEPROM MEMORY

Name	Bit 7	Bit 6	Bit 5	Bit 4	Bit 3	Bit 2	Bit 1	Bit 0	Reset Values on page
INTCON	GIE/GIEH	PEIE/GIEL	TMR0IE	INT0IE	RBIE	TMR0IF	INT0IF	RBIF	59
EEADR	EEADR7	EEADR6	EEADR5	EEADR4	EEADR3	EEADR2	EEADR1	EEADR0	61
EEADRH(1)	—	—	—	—	—	—	EEADR9	EEADR8	61
EEDATA	EEPROM Data Register								61
EECON2	EEPROM Control Register 2 (not a physical register)								61
EECON1	EEPGD	CFGS	—	FREE	WRERR	WREN	WR	RD	61
IPR2	OSCFIP	C1IP	C2IP	EEIP	BCLIP	HLVDIP	TMR3IP	CCP2IP	62
PIR2	OSCFIF	C1IF	C2IF	EEIF	BCLIF	HLVDIF	TMR3IF	CCP2IF	62
PIE2	OSCFIE	C1IE	C2IE	EEIE	BCLIE	HLVDIE	TMR3IE	CCP2IE	62

Legend: — = unimplemented, read as '0'. Shaded cells are not used during Flash/EEPROM access.

Note 1: PIC18F26K20/PIC18F46K20 only.

NOTES:

© 2010 Microchip Technology Inc.

8.0 8 x 8 HARDWARE MULTIPLIER

8.1 Introduction

All PIC18 devices include an 8 x 8 hardware multiplier as part of the ALU. The multiplier performs an unsigned operation and yields a 16-bit result that is stored in the product register pair, PRODH:PRODL. The multiplier's operation does not affect any flags in the STATUS register.

Making multiplication a hardware operation allows it to be completed in a single instruction cycle. This has the advantages of higher computational throughput and reduced code size for multiplication algorithms and allows the PIC18 devices to be used in many applications previously reserved for digital signal processors. A comparison of various hardware and software multiply operations, along with the savings in memory and execution time, is shown in Table 8-1.

8.2 Operation

Example 8-1 shows the instruction sequence for an 8 x 8 unsigned multiplication. Only one instruction is required when one of the arguments is already loaded in the WREG register.

Example 8-2 shows the sequence to do an 8 x 8 signed multiplication. To account for the sign bits of the arguments, each argument's Most Significant bit (MSb) is tested and the appropriate subtractions are done.

EXAMPLE 8-1: 8 x 8 UNSIGNED MULTIPLY ROUTINE

```
MOVF    ARG1, W     ;
MULWF   ARG2        ; ARG1 * ARG2 ->
                    ; PRODH:PRODL
```

EXAMPLE 8-2: 8 x 8 SIGNED MULTIPLY ROUTINE

```
MOVF    ARG1, W
MULWF   ARG2        ; ARG1 * ARG2 ->
                    ; PRODH:PRODL
BTFSC   ARG2, SB    ; Test Sign Bit
SUBWF   PRODH, F    ; PRODH = PRODH
                    ;         - ARG1
MOVF    ARG2, W
BTFSC   ARG1, SB    ; Test Sign Bit
SUBWF   PRODH, F    ; PRODH = PRODH
                    ;         - ARG2
```

TABLE 8-1: PERFORMANCE COMPARISON FOR VARIOUS MULTIPLY OPERATIONS

Routine	Multiply Method	Program Memory (Words)	Cycles (Max)	Time		
				@ 40 MHz	@ 10 MHz	@ 4 MHz
8 x 8 unsigned	Without hardware multiply	13	69	6.9 μs	27.6 μs	69 μs
	Hardware multiply	1	1	100 ns	400 ns	1 μs
8 x 8 signed	Without hardware multiply	33	91	9.1 μs	36.4 μs	91 μs
	Hardware multiply	6	6	600 ns	2.4 μs	6 μs
16 x 16 unsigned	Without hardware multiply	21	242	24.2 μs	96.8 μs	242 μs
	Hardware multiply	28	28	2.8 μs	11.2 μs	28 μs
16 x 16 signed	Without hardware multiply	52	254	25.4 μs	102.6 μs	254 μs
	Hardware multiply	35	40	4.0 μs	16.0 μs	40 μs

Example 8-3 shows the sequence to do a 16 x 16 unsigned multiplication. Equation 8-1 shows the algorithm that is used. The 32-bit result is stored in four registers (RES<3:0>).

EQUATION 8-1: 16 x 16 UNSIGNED MULTIPLICATION ALGORITHM

$$
\begin{aligned}
RES3:RES0 &= ARG1H:ARG1L \bullet ARG2H:ARG2L \\
&= (ARG1H \bullet ARG2H \bullet 2^{16}) + \\
&\quad (ARG1H \bullet ARG2L \bullet 2^{8}) + \\
&\quad (ARG1L \bullet ARG2H \bullet 2^{8}) + \\
&\quad (ARG1L \bullet ARG2L)
\end{aligned}
$$

EXAMPLE 8-3: 16 x 16 UNSIGNED MULTIPLY ROUTINE

```
    MOVF    ARG1L, W
    MULWF   ARG2L           ; ARG1L * ARG2L->
                            ; PRODH:PRODL
    MOVFF   PRODH, RES1     ;
    MOVFF   PRODL, RES0     ;
;
    MOVF    ARG1H, W
    MULWF   ARG2H           ; ARG1H * ARG2H->
                            ; PRODH:PRODL
    MOVFF   PRODH, RES3     ;
    MOVFF   PRODL, RES2     ;
;
    MOVF    ARG1L, W
    MULWF   ARG2H           ; ARG1L * ARG2H->
                            ; PRODH:PRODL
    MOVF    PRODL, W        ;
    ADDWF   RES1, F         ; Add cross
    MOVF    PRODH, W        ; products
    ADDWFC  RES2, F         ;
    CLRF    WREG            ;
    ADDWFC  RES3, F         ;
;
    MOVF    ARG1H, W        ;
    MULWF   ARG2L           ; ARG1H * ARG2L->
                            ; PRODH:PRODL
    MOVF    PRODL, W        ;
    ADDWF   RES1, F         ; Add cross
    MOVF    PRODH, W        ; products
    ADDWFC  RES2, F         ;
    CLRF    WREG            ;
    ADDWFC  RES3, F         ;
```

Example 8-4 shows the sequence to do a 16 x 16 signed multiply. Equation 8-2 shows the algorithm used. The 32-bit result is stored in four registers (RES<3:0>). To account for the sign bits of the arguments, the MSb for each argument pair is tested and the appropriate subtractions are done.

EQUATION 8-2: 16 x 16 SIGNED MULTIPLICATION ALGORITHM

$$
\begin{aligned}
RES3:RES0 &= ARG1H:ARG1L \bullet ARG2H:ARG2L \\
&= (ARG1H \bullet ARG2H \bullet 2^{16}) + \\
&\quad (ARG1H \bullet ARG2L \bullet 2^{8}) + \\
&\quad (ARG1L \bullet ARG2H \bullet 2^{8}) + \\
&\quad (ARG1L \bullet ARG2L) + \\
&\quad (-1 \bullet ARG2H\langle 7\rangle \bullet ARG1H:ARG1L \bullet 2^{16}) + \\
&\quad (-1 \bullet ARG1H\langle 7\rangle \bullet ARG2H:ARG2L \bullet 2^{16})
\end{aligned}
$$

EXAMPLE 8-4: 16 x 16 SIGNED MULTIPLY ROUTINE

```
    MOVF    ARG1L, W
    MULWF   ARG2L           ; ARG1L * ARG2L ->
                            ; PRODH:PRODL
    MOVFF   PRODH, RES1     ;
    MOVFF   PRODL, RES0     ;
;
    MOVF    ARG1H, W
    MULWF   ARG2H           ; ARG1H * ARG2H ->
                            ; PRODH:PRODL
    MOVFF   PRODH, RES3     ;
    MOVFF   PRODL, RES2     ;
;
    MOVF    ARG1L, W
    MULWF   ARG2H           ; ARG1L * ARG2H ->
                            ; PRODH:PRODL
    MOVF    PRODL, W        ;
    ADDWF   RES1, F         ; Add cross
    MOVF    PRODH, W        ; products
    ADDWFC  RES2, F         ;
    CLRF    WREG            ;
    ADDWFC  RES3, F         ;
;
    MOVF    ARG1H, W        ;
    MULWF   ARG2L           ; ARG1H * ARG2L ->
                            ; PRODH:PRODL
    MOVF    PRODL, W        ;
    ADDWF   RES1, F         ; Add cross
    MOVF    PRODH, W        ; products
    ADDWFC  RES2, F         ;
    CLRF    WREG            ;
    ADDWFC  RES3, F         ;
;
    BTFSS   ARG2H, 7        ; ARG2H:ARG2L neg?
    BRA     SIGN_ARG1       ; no, check ARG1
    MOVF    ARG1L, W        ;
    SUBWF   RES2            ;
    MOVF    ARG1H, W        ;
    SUBWFB  RES3
;
SIGN_ARG1
    BTFSS   ARG1H, 7        ; ARG1H:ARG1L neg?
    BRA     CONT_CODE       ; no, done
    MOVF    ARG2L, W        ;
    SUBWF   RES2            ;
    MOVF    ARG2H, W        ;
    SUBWFB  RES3
;
CONT_CODE
    :
```


© 2010 Microchip Technology Inc.

9.0 INTERRUPTS

The PIC18F2XK20/4XK20 devices have multiple interrupt sources and an interrupt priority feature that allows most interrupt sources to be assigned a high priority level or a low priority level. The high priority interrupt vector is at 0008h and the low priority interrupt vector is at 0018h. A high priority interrupt event will interrupt a low priority interrupt that may be in progress.

There are ten registers which are used to control interrupt operation. These registers are:

- RCON
- INTCON
- INTCON2
- INTCON3
- PIR1, PIR2
- PIE1, PIE2
- IPR1, IPR2

It is recommended that the Microchip header files supplied with MPLAB® IDE be used for the symbolic bit names in these registers. This allows the assembler/compiler to automatically take care of the placement of these bits within the specified register.

In general, interrupt sources have three bits to control their operation. They are:

- **Flag bit** to indicate that an interrupt event occurred
- **Enable bit** that allows program execution to branch to the interrupt vector address when the flag bit is set
- **Priority bit** to select high priority or low priority

9.1 Mid-Range Compatibility

When the IPEN bit is cleared (default state), the interrupt priority feature is disabled and interrupts are compatible with PIC® microcontroller mid-range devices. In Compatibility mode, the interrupt priority bits of the IPRx registers have no effect. The PEIE bit of the INTCON register is the global interrupt enable for the peripherals. The PEIE bit disables only the peripheral interrupt sources and enables the peripheral interrupt sources when the GIE bit is also set. The GIE bit of the INTCON register is the global interrupt enable which enables all non-peripheral interrupt sources and disables all interrupt sources, including the peripherals. All interrupts branch to address 0008h in Compatibility mode.

9.2 Interrupt Priority

The interrupt priority feature is enabled by setting the IPEN bit of the RCON register. When interrupt priority is enabled the GIE and PEIE global interrupt enable bits of Compatibility mode are replaced by the GIEH high priority, and GIEL low priority, global interrupt enables. When set, the GIEH bit of the INTCON register enables all interrupts that have their associated IPRx register or INTCONx register priority bit set (high priority). When clear, the GIEH bit disables all interrupt sources including those selected as low priority. When clear, the GIEL bit of the INTCON register disables only the interrupts that have their associated priority bit cleared (low priority). When set, the GIEL bit enables the low priority sources when the GIEH bit is also set.

When the interrupt flag, enable bit and appropriate global interrupt enable bit are all set, the interrupt will vector immediately to address 0008h for high priority, or 0018h for low priority, depending on level of the interrupting source's priority bit. Individual interrupts can be disabled through their corresponding interrupt enable bits.

9.3 Interrupt Response

When an interrupt is responded to, the global interrupt enable bit is cleared to disable further interrupts. The GIE bit is the global interrupt enable when the IPEN bit is cleared. When the IPEN bit is set, enabling interrupt priority levels, the GIEH bit is the high priority global interrupt enable and the GIEL bit is the low priority global interrupt enable. High priority interrupt sources can interrupt a low priority interrupt. Low priority interrupts are not processed while high priority interrupts are in progress.

The return address is pushed onto the stack and the PC is loaded with the interrupt vector address (0008h or 0018h). Once in the Interrupt Service Routine, the source(s) of the interrupt can be determined by polling the interrupt flag bits in the INTCONx and PIRx registers. The interrupt flag bits must be cleared by software before re-enabling interrupts to avoid repeating the same interrupt.

The "return from interrupt" instruction, `RETFIE`, exits the interrupt routine and sets the GIE bit (GIEH or GIEL if priority levels are used), which re-enables interrupts.

For external interrupt events, such as the INT pins or the PORTB interrupt-on-change, the interrupt latency will be three to four instruction cycles. The exact latency is the same for one-cycle or two-cycle instructions. Individual interrupt flag bits are set, regardless of the status of their corresponding enable bits or the global interrupt enable bit.

Note:	Do not use the `MOVFF` instruction to modify any of the interrupt control registers while **any** interrupt is enabled. Doing so may cause erratic microcontroller behavior.

FIGURE 9-1: PIC18 INTERRUPT LOGIC

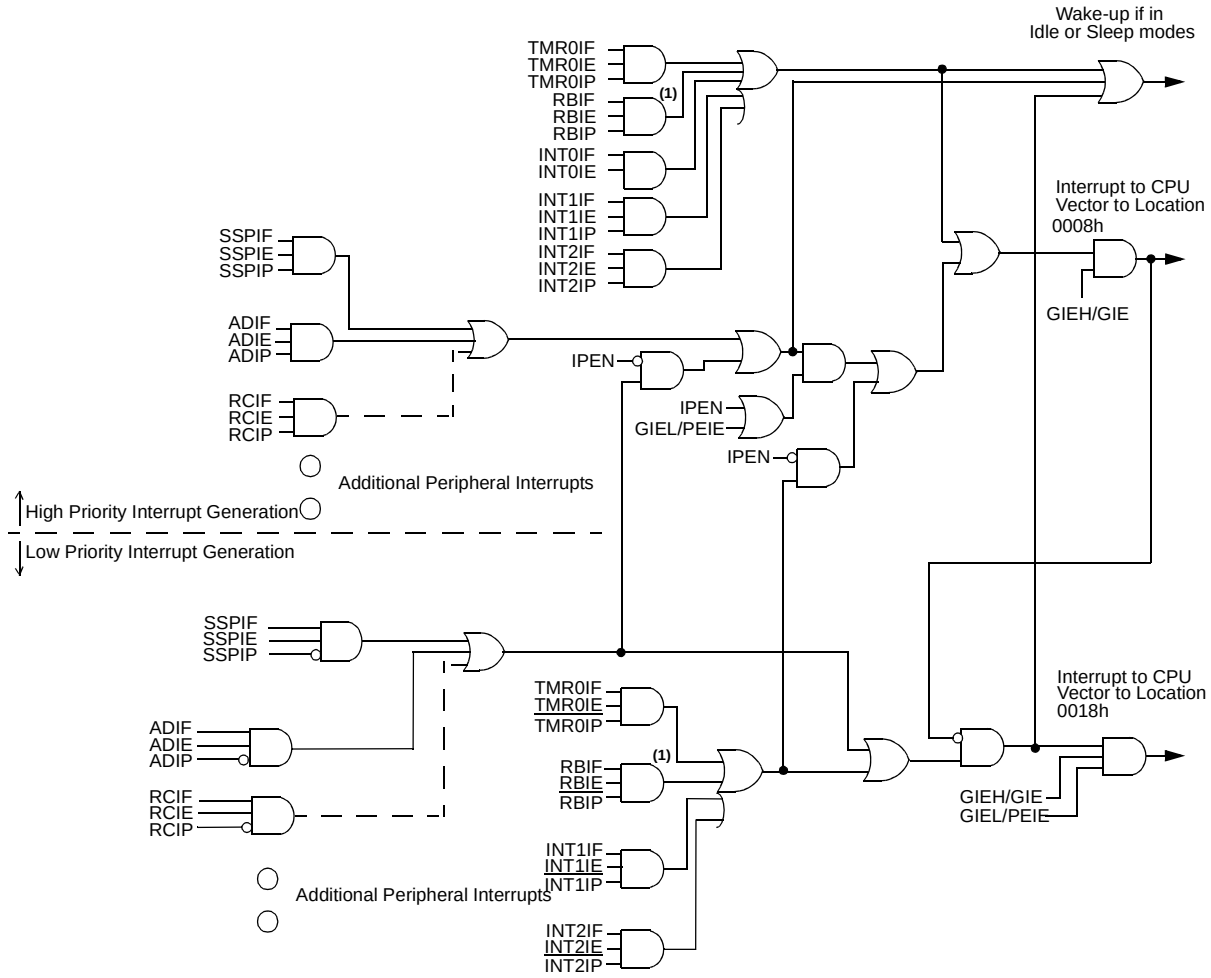

Note 1: The RBIF interrupt also requires the individual pin IOCB enables.

© 2010 Microchip Technology Inc.

9.4 INTCON Registers

The INTCON registers are readable and writable registers, which contain various enable, priority and flag bits.

Note: Interrupt flag bits are set when an interrupt condition occurs, regardless of the state of its corresponding enable bit or the global enable bit. User software should ensure the appropriate interrupt flag bits are clear prior to enabling an interrupt. This feature allows for software polling.

REGISTER 9-1: INTCON: INTERRUPT CONTROL REGISTER

R/W-0	R/W-0	R/W-0	R/W-0	R/W-0	R/W-0	R/W-0	R/W-x
GIE/GIEH	PEIE/GIEL	TMR0IE	INT0IE	RBIE	TMR0IF	INT0IF	RBIF
bit 7							bit 0

Legend:			
R = Readable bit	W = Writable bit	U = Unimplemented bit, read as '0'	
-n = Value at POR	'1' = Bit is set	'0' = Bit is cleared	x = Bit is unknown

bit 7 **GIE/GIEH:** Global Interrupt Enable bit
When IPEN = 0:
1 = Enables all unmasked interrupts
0 = Disables all interrupts including peripherals
When IPEN = 1:
1 = Enables all high priority interrupts
0 = Disables all interrupts including low priority.

bit 6 **PEIE/GIEL:** Peripheral Interrupt Enable bit
When IPEN = 0:
1 = Enables all unmasked peripheral interrupts
0 = Disables all peripheral interrupts
When IPEN = 1:
1 = Enables all low priority interrupts
0 = Disables all low priority interrupts

bit 5 **TMR0IE:** TMR0 Overflow Interrupt Enable bit
1 = Enables the TMR0 overflow interrupt
0 = Disables the TMR0 overflow interrupt

bit 4 **INT0IE:** INT0 External Interrupt Enable bit
1 = Enables the INT0 external interrupt
0 = Disables the INT0 external interrupt

bit 3 **RBIE:** RB Port Change Interrupt Enable bit(2)
1 = Enables the RB port change interrupt
0 = Disables the RB port change interrupt

bit 2 **TMR0IF:** TMR0 Overflow Interrupt Flag bit
1 = TMR0 register has overflowed (must be cleared by software)
0 = TMR0 register did not overflow

bit 1 **INT0IF:** INT0 External Interrupt Flag bit
1 = The INT0 external interrupt occurred (must be cleared by software)
0 = The INT0 external interrupt did not occur

bit 0 **RBIF:** RB Port Change Interrupt Flag bit(1)
1 = At least one of the RB<7:4> pins changed state (must be cleared by software)
0 = None of the RB<7:4> pins have changed state

Note 1: A mismatch condition will continue to set the RBIF bit. Reading PORTB will end the mismatch condition and allow the bit to be cleared.
2: RB port change interrupts also require the individual pin IOCB enables.

REGISTER 9-2: INTCON2: INTERRUPT CONTROL 2 REGISTER

R/W-1	R/W-1	R/W-1	R/W-1	U-0	R/W-1	U-0	R/W-1
$\overline{\text{RBPU}}$	INTEDG0	INTEDG1	INTEDG2	—	TMR0IP	—	RBIP
bit 7							bit 0

Legend:			
R = Readable bit	W = Writable bit	U = Unimplemented bit, read as '0'	
-n = Value at POR	'1' = Bit is set	'0' = Bit is cleared	x = Bit is unknown

bit 7 **$\overline{\text{RBPU}}$:** PORTB Pull-up Enable bit
1 = All PORTB pull-ups are disabled
0 = PORTB pull-ups are enabled provided that the pin is an input and the corresponding WPUB bit is set.

bit 6 **INTEDG0:** External Interrupt 0 Edge Select bit
1 = Interrupt on rising edge
0 = Interrupt on falling edge

bit 5 **INTEDG1:** External Interrupt 1 Edge Select bit
1 = Interrupt on rising edge
0 = Interrupt on falling edge

bit 4 **INTEDG2:** External Interrupt 2 Edge Select bit
1 = Interrupt on rising edge
0 = Interrupt on falling edge

bit 3 **Unimplemented:** Read as '0'

bit 2 **TMR0IP:** TMR0 Overflow Interrupt Priority bit
1 = High priority
0 = Low priority

bit 1 **Unimplemented:** Read as '0'

bit 0 **RBIP:** RB Port Change Interrupt Priority bit
1 = High priority
0 = Low priority

Note: Interrupt flag bits are set when an interrupt condition occurs, regardless of the state of its corresponding enable bit or the global enable bit. User software should ensure the appropriate interrupt flag bits are clear prior to enabling an interrupt. This feature allows for software polling.

© 2010 Microchip Technology Inc.

REGISTER 9-3: INTCON3: INTERRUPT CONTROL 3 REGISTER

R/W-1	R/W-1	U-0	R/W-0	R/W-0	U-0	R/W-0	R/W-0
INT2IP	INT1IP	—	INT2IE	INT1IE	—	INT2IF	INT1IF
bit 7							bit 0

Legend:			
R = Readable bit	W = Writable bit	U = Unimplemented bit, read as ‘0’	
-n = Value at POR	‘1’ = Bit is set	‘0’ = Bit is cleared	x = Bit is unknown

bit 7 **INT2IP:** INT2 External Interrupt Priority bit
1 = High priority
0 = Low priority

bit 6 **INT1IP:** INT1 External Interrupt Priority bit
1 = High priority
0 = Low priority

bit 5 **Unimplemented:** Read as ‘0’

bit 4 **INT2IE:** INT2 External Interrupt Enable bit
1 = Enables the INT2 external interrupt
0 = Disables the INT2 external interrupt

bit 3 **INT1IE:** INT1 External Interrupt Enable bit
1 = Enables the INT1 external interrupt
0 = Disables the INT1 external interrupt

bit 2 **Unimplemented:** Read as ‘0’

bit 1 **INT2IF:** INT2 External Interrupt Flag bit
1 = The INT2 external interrupt occurred (must be cleared by software)
0 = The INT2 external interrupt did not occur

bit 0 **INT1IF:** INT1 External Interrupt Flag bit
1 = The INT1 external interrupt occurred (must be cleared by software)
0 = The INT1 external interrupt did not occur

Note: Interrupt flag bits are set when an interrupt condition occurs, regardless of the state of its corresponding enable bit or the global enable bit. User software should ensure the appropriate interrupt flag bits are clear prior to enabling an interrupt. This feature allows for software polling.

9.5 PIR Registers

The PIR registers contain the individual flag bits for the peripheral interrupts. Due to the number of peripheral interrupt sources, there are two Peripheral Interrupt Request Flag registers (PIR1 and PIR2).

Note 1: Interrupt flag bits are set when an interrupt condition occurs, regardless of the state of its corresponding enable bit or the Global Interrupt Enable bit, GIE of the INTCON register.

2: User software should ensure the appropriate interrupt flag bits are cleared prior to enabling an interrupt and after servicing that interrupt.

REGISTER 9-4: PIR1: PERIPHERAL INTERRUPT REQUEST (FLAG) REGISTER 1

R/W-0	R/W-0	R-0	R-0	R/W-0	R/W-0	R/W-0	R/W-0
PSPIF(1)	ADIF	RCIF	TXIF	SSPIF	CCP1IF	TMR2IF	TMR1IF
bit 7							bit 0

Legend:			
R = Readable bit	W = Writable bit	U = Unimplemented bit, read as '0'	
-n = Value at POR	'1' = Bit is set	'0' = Bit is cleared	x = Bit is unknown

bit 7 **PSPIF:** Parallel Slave Port Read/Write Interrupt Flag bit(1)
1 = A read or a write operation has taken place (must be cleared by software)
0 = No read or write has occurred

bit 6 **ADIF:** A/D Converter Interrupt Flag bit
1 = An A/D conversion completed (must be cleared by software)
0 = The A/D conversion is not complete or has not been started

bit 5 **RCIF:** EUSART Receive Interrupt Flag bit
1 = The EUSART receive buffer, RCREG, is full (cleared when RCREG is read)
0 = The EUSART receive buffer is empty

bit 4 **TXIF:** EUSART Transmit Interrupt Flag bit
1 = The EUSART transmit buffer, TXREG, is empty (cleared when TXREG is written)
0 = The EUSART transmit buffer is full

bit 3 **SSPIF:** Master Synchronous Serial Port Interrupt Flag bit
1 = The transmission/reception is complete (must be cleared by software)
0 = Waiting to transmit/receive

bit 2 **CCP1IF:** CCP1 Interrupt Flag bit
Capture mode:
1 = A TMR1 register capture occurred (must be cleared by software)
0 = No TMR1 register capture occurred
Compare mode:
1 = A TMR1 register compare match occurred (must be cleared by software)
0 = No TMR1 register compare match occurred
PWM mode:
Unused in this mode

bit 1 **TMR2IF:** TMR2 to PR2 Match Interrupt Flag bit
1 = TMR2 to PR2 match occurred (must be cleared by software)
0 = No TMR2 to PR2 match occurred

bit 0 **TMR1IF:** TMR1 Overflow Interrupt Flag bit
1 = TMR1 register overflowed (must be cleared by software)
0 = TMR1 register did not overflow

Note 1: The PSPIF bit is unimplemented on 28-pin devices and will read as '0'.

© 2010 Microchip Technology Inc.

REGISTER 9-5: PIR2: PERIPHERAL INTERRUPT REQUEST (FLAG) REGISTER 2

R/W-0	R/W-0	R/W-0	R/W-0	R/W-0	R/W-0	R/W-0	R/W-0
OSCFIF	C1IF	C2IF	EEIF	BCLIF	HLVDIF	TMR3IF	CCP2IF
bit 7							bit 0

Legend:			
R = Readable bit	W = Writable bit	U = Unimplemented bit, read as '0'	
-n = Value at POR	'1' = Bit is set	'0' = Bit is cleared	x = Bit is unknown

bit 7 **OSCFIF:** Oscillator Fail Interrupt Flag bit
1 = Device oscillator failed, clock input has changed to HFINTOSC (must be cleared by software)
0 = Device clock operating

bit 6 **C1IF:** Comparator C1 Interrupt Flag bit
1 = Comparator C1 output has changed (must be cleared by software)
0 = Comparator C1 output has not changed

bit 5 **C2IF:** Comparator C2 Interrupt Flag bit
1 = Comparator C2 output has changed (must be cleared by software)
0 = Comparator C2 output has not changed

bit 4 **EEIF:** Data EEPROM/Flash Write Operation Interrupt Flag bit
1 = The write operation is complete (must be cleared by software)
0 = The write operation is not complete or has not been started

bit 3 **BCLIF:** Bus Collision Interrupt Flag bit
1 = A bus collision occurred (must be cleared by software)
0 = No bus collision occurred

bit 2 **HLVDIF:** Low-Voltage Detect Interrupt Flag bit
1 = A low-voltage condition occurred (direction determined by the VDIRMAG bit of the HLVDCON register)
0 = A low-voltage condition has not occurred

bit 1 **TMR3IF:** TMR3 Overflow Interrupt Flag bit
1 = TMR3 register overflowed (must be cleared by software)
0 = TMR3 register did not overflow

bit 0 **CCP2IF:** CCP2 Interrupt Flag bit
Capture mode:
1 = A TMR1 register capture occurred (must be cleared by software)
0 = No TMR1 register capture occurred
Compare mode:
1 = A TMR1 register compare match occurred (must be cleared by software)
0 = No TMR1 register compare match occurred
PWM mode:
Unused in this mode.

9.6 PIE Registers

The PIE registers contain the individual enable bits for the peripheral interrupts. Due to the number of peripheral interrupt sources, there are two Peripheral Interrupt Enable registers (PIE1 and PIE2). When IPEN = 0, the PEIE bit must be set to enable any of these peripheral interrupts.

REGISTER 9-6: PIE1: PERIPHERAL INTERRUPT ENABLE (FLAG) REGISTER 1

R/W-0	R/W-0	R/W-0	R/W-0	R/W-0	R/W-0	R/W-0	R/W-0
PSPIE(1)	ADIE	RCIE	TXIE	SSPIE	CCP1IE	TMR2IE	TMR1IE
bit 7							bit 0

Legend:			
R = Readable bit	W = Writable bit	U = Unimplemented bit, read as '0'	
-n = Value at POR	'1' = Bit is set	'0' = Bit is cleared	x = Bit is unknown

bit 7 **PSPIE:** Parallel Slave Port Read/Write Interrupt Enable bit(1)
1 = Enables the PSP read/write interrupt
0 = Disables the PSP read/write interrupt

bit 6 **ADIE:** A/D Converter Interrupt Enable bit
1 = Enables the A/D interrupt
0 = Disables the A/D interrupt

bit 5 **RCIE:** EUSART Receive Interrupt Enable bit
1 = Enables the EUSART receive interrupt
0 = Disables the EUSART receive interrupt

bit 4 **TXIE:** EUSART Transmit Interrupt Enable bit
1 = Enables the EUSART transmit interrupt
0 = Disables the EUSART transmit interrupt

bit 3 **SSPIE:** Master Synchronous Serial Port Interrupt Enable bit
1 = Enables the MSSP interrupt
0 = Disables the MSSP interrupt

bit 2 **CCP1IE:** CCP1 Interrupt Enable bit
1 = Enables the CCP1 interrupt
0 = Disables the CCP1 interrupt

bit 1 **TMR2IE:** TMR2 to PR2 Match Interrupt Enable bit
1 = Enables the TMR2 to PR2 match interrupt
0 = Disables the TMR2 to PR2 match interrupt

bit 0 **TMR1IE:** TMR1 Overflow Interrupt Enable bit
1 = Enables the TMR1 overflow interrupt
0 = Disables the TMR1 overflow interrupt

Note 1: The PSPIE bit is unimplemented on 28-pin devices and will read as '0'.

© 2010 Microchip Technology Inc.

REGISTER 9-7: PIE2: PERIPHERAL INTERRUPT ENABLE (FLAG) REGISTER 2

R/W-0	R/W-0	R/W-0	R/W-0	R/W-0	R/W-0	R/W-0	R/W-0
OSCFIE	C1IE	C2IE	EEIE	BCLIE	HLVDIE	TMR3IE	CCP2IE
bit 7							bit 0

Legend:			
R = Readable bit	W = Writable bit	U = Unimplemented bit, read as '0'	
-n = Value at POR	'1' = Bit is set	'0' = Bit is cleared	x = Bit is unknown

bit 7 **OSCFIE:** Oscillator Fail Interrupt Enable bit
1 = Enabled
0 = Disabled

bit 6 **C1IE:** Comparator C1 Interrupt Enable bit
1 = Enabled
0 = Disabled

bit 5 **C2IE:** Comparator C2 Interrupt Enable bit
1 = Enabled
0 = Disabled

bit 4 **EEIE:** Data EEPROM/Flash Write Operation Interrupt Enable bit
1 = Enabled
0 = Disabled

bit 3 **BCLIE:** Bus Collision Interrupt Enable bit
1 = Enabled
0 = Disabled

bit 2 **HLVDIE:** Low-Voltage Detect Interrupt Enable bit
1 = Enabled
0 = Disabled

bit 1 **TMR3IE:** TMR3 Overflow Interrupt Enable bit
1 = Enabled
0 = Disabled

bit 0 **CCP2IE:** CCP2 Interrupt Enable bit
1 = Enabled
0 = Disabled

9.7 IPR Registers

The IPR registers contain the individual priority bits for the peripheral interrupts. Due to the number of peripheral interrupt sources, there are two Peripheral Interrupt Priority registers (IPR1 and IPR2). Using the priority bits requires that the Interrupt Priority Enable (IPEN) bit be set.

REGISTER 9-8: IPR1: PERIPHERAL INTERRUPT PRIORITY REGISTER 1

R/W-1	R/W-1	R/W-1	R/W-1	R/W-1	R/W-1	R/W-1	R/W-1
PSPIP(1)	ADIP	RCIP	TXIP	SSPIP	CCP1IP	TMR2IP	TMR1IP
bit 7							bit 0

Legend:			
R = Readable bit	W = Writable bit	U = Unimplemented bit, read as '0'	
-n = Value at POR	'1' = Bit is set	'0' = Bit is cleared	x = Bit is unknown

bit 7 **PSPIP:** Parallel Slave Port Read/Write Interrupt Priority bit(1)
1 = High priority
0 = Low priority

bit 6 **ADIP:** A/D Converter Interrupt Priority bit
1 = High priority
0 = Low priority

bit 5 **RCIP:** EUSART Receive Interrupt Priority bit
1 = High priority
0 = Low priority

bit 4 **TXIP:** EUSART Transmit Interrupt Priority bit
1 = High priority
0 = Low priority

bit 3 **SSPIP:** Master Synchronous Serial Port Interrupt Priority bit
1 = High priority
0 = Low priority

bit 2 **CCP1IP:** CCP1 Interrupt Priority bit
1 = High priority
0 = Low priority

bit 1 **TMR2IP:** TMR2 to PR2 Match Interrupt Priority bit
1 = High priority
0 = Low priority

bit 0 **TMR1IP:** TMR1 Overflow Interrupt Priority bit
1 = High priority
0 = Low priority

Note 1: The PSPIF bit is unimplemented on 28-pin devices and will read as '0'.

© 2010 Microchip Technology Inc.

REGISTER 9-9: IPR2: PERIPHERAL INTERRUPT PRIORITY REGISTER 2

R/W-1	R/W-1	R/W-1	R/W-1	R/W-1	R/W-1	R/W-1	R/W-1
OSCFIP	C1IP	C2IP	EEIP	BCLIP	HLVDIP	TMR3IP	CCP2IP
bit 7							bit 0

Legend:			
R = Readable bit	W = Writable bit	U = Unimplemented bit, read as ‘0’	
-n = Value at POR	‘1’ = Bit is set	‘0’ = Bit is cleared	x = Bit is unknown

bit 7 **OSCFIP:** Oscillator Fail Interrupt Priority bit
1 = High priority
0 = Low priority

bit 6 **C1IP:** Comparator C1 Interrupt Priority bit
1 = High priority
0 = Low priority

bit 5 **C2IP:** Comparator C2 Interrupt Priority bit
1 = High priority
0 = Low priority

bit 4 **EEIP:** Data EEPROM/Flash Write Operation Interrupt Priority bit
1 = High priority
0 = Low priority

bit 3 **BCLIP:** Bus Collision Interrupt Priority bit
1 = High priority
0 = Low priority

bit 2 **HLVDIP:** Low-Voltage Detect Interrupt Priority bit
1 = High priority
0 = Low priority

bit 1 **TMR3IP:** TMR3 Overflow Interrupt Priority bit
1 = High priority
0 = Low priority

bit 0 **CCP2IP:** CCP2 Interrupt Priority bit
1 = High priority
0 = Low priority

9.8 RCON Register

The RCON register contains flag bits which are used to determine the cause of the last Reset or wake-up from Idle or Sleep modes. RCON also contains the IPEN bit which enables interrupt priorities.

The operation of the SBOREN bit and the Reset flag bits is discussed in more detail in **Section 4.1 "RCON Register"**.

REGISTER 9-10: RCON: RESET CONTROL REGISTER

R/W-0	R/W-1	U-0	R/W-1	R-1	R-1	R/W-0	R/W-0
IPEN	SBOREN(1)	—	$\overline{RI}$	$\overline{TO}$	$\overline{PD}$	$\overline{POR}$(1)	$\overline{BOR}$
bit 7							bit 0

Legend:			
R = Readable bit	W = Writable bit	U = Unimplemented bit, read as '0'	
-n = Value at POR	'1' = Bit is set	'0' = Bit is cleared	x = Bit is unknown

bit 7 **IPEN:** Interrupt Priority Enable bit
1 = Enable priority levels on interrupts
0 = Disable priority levels on interrupts (Mid-Range Compatibility mode)

bit 6 **SBOREN:** Software BOR Enable bit(1)
For details of bit operation, see Register 4-1.

bit 5 **Unimplemented:** Read as '0'

bit 4 **$\overline{RI}$:** RESET Instruction Flag bit
For details of bit operation, see Register 4-1.

bit 3 **$\overline{TO}$:** Watchdog Time-out Flag bit
For details of bit operation, see Register 4-1.

bit 2 **$\overline{PD}$:** Power-down Detection Flag bit
For details of bit operation, see Register 4-1

bit 1 **$\overline{POR}$:** Power-on Reset Status bit
For details of bit operation, see Register 4-1.

bit 0 **$\overline{BOR}$:** Brown-out Reset Status bit
For details of bit operation, see Register 4-1.

Note 1: Actual Reset values are determined by device configuration and the nature of the device Reset. See Register 4-1 for additional information.

© 2010 Microchip Technology Inc.

9.9 INTn Pin Interrupts

External interrupts on the RB0/INT0, RB1/INT1 and RB2/INT2 pins are edge-triggered. If the corresponding INTEDGx bit in the INTCON2 register is set (= 1), the interrupt is triggered by a rising edge; if the bit is clear, the trigger is on the falling edge. When a valid edge appears on the RBx/INTx pin, the corresponding flag bit, INTxF, is set. This interrupt can be disabled by clearing the corresponding enable bit, INTxE. Flag bit, INTxF, must be cleared by software in the Interrupt Service Routine before re-enabling the interrupt.

All external interrupts (INT0, INT1 and INT2) can wake-up the processor from Idle or Sleep modes if bit INTxE was set prior to going into those modes. If the Global Interrupt Enable bit, GIE, is set, the processor will branch to the interrupt vector following wake-up.

Interrupt priority for INT1 and INT2 is determined by the value contained in the interrupt priority bits, INT1IP and INT2IP of the INTCON3 register. There is no priority bit associated with INT0. It is always a high priority interrupt source.

9.10 TMR0 Interrupt

In 8-bit mode (which is the default), an overflow in the TMR0 register (FFh $\rightarrow$ 00h) will set flag bit, TMR0IF. In 16-bit mode, an overflow in the TMR0H:TMR0L register pair (FFFFh $\rightarrow$ 0000h) will set TMR0IF. The interrupt can be enabled/disabled by setting/clearing enable bit, TMR0IE of the INTCON register. Interrupt priority for Timer0 is determined by the value contained in the interrupt priority bit, TMR0IP of the INTCON2 register. See **Section 12.0 "Timer0 Module"** for further details on the Timer0 module.

9.11 PORTB Interrupt-on-Change

An input change on PORTB<7:4> sets flag bit, RBIF of the INTCON register. The interrupt can be enabled/disabled by setting/clearing enable bit, RBIE of the INTCON register. Pins must also be individually enabled with the IOCB register. Interrupt priority for PORTB interrupt-on-change is determined by the value contained in the interrupt priority bit, RBIP of the INTCON2 register.

9.12 Context Saving During Interrupts

During interrupts, the return PC address is saved on the stack. Additionally, the WREG, STATUS and BSR registers are saved on the fast return stack. If a fast return from interrupt is not used (see **Section 5.1.3 "Fast Register Stack"**), the user may need to save the WREG, STATUS and BSR registers on entry to the Interrupt Service Routine. Depending on the user's application, other registers may also need to be saved. Example 9-1 saves and restores the WREG, STATUS and BSR registers during an Interrupt Service Routine.

EXAMPLE 9-1: SAVING STATUS, WREG AND BSR REGISTERS IN RAM

```
MOVWF     W_TEMP                    ; W_TEMP is in virtual bank
MOVFF     STATUS, STATUS_TEMP       ; STATUS_TEMP located anywhere
MOVFF     BSR, BSR_TEMP             ; BSR_TMEP located anywhere
;
; USER ISR CODE
;
MOVFF     BSR_TEMP, BSR             ; Restore BSR
MOVF      W_TEMP, W                 ; Restore WREG
MOVFF     STATUS_TEMP, STATUS       ; Restore STATUS
```

NOTES:

© 2010 Microchip Technology Inc.

10.0 I/O PORTS

Depending on the device selected and features enabled, there are up to five ports available. Some pins of the I/O ports are multiplexed with an alternate function from the peripheral features on the device. In general, when a peripheral is enabled, that pin may not be used as a general purpose I/O pin.

Each port has three registers for its operation. These registers are:

- TRIS register (data direction register)
- PORT register (reads the levels on the pins of the device)
- LAT register (output latch)

The Data Latch (LAT register) is useful for read-modify-write operations on the value that the I/O pins are driving.

A simplified model of a generic I/O port, without the interfaces to other peripherals, is shown in Figure 10-1.

FIGURE 10-1: GENERIC I/O PORT OPERATION

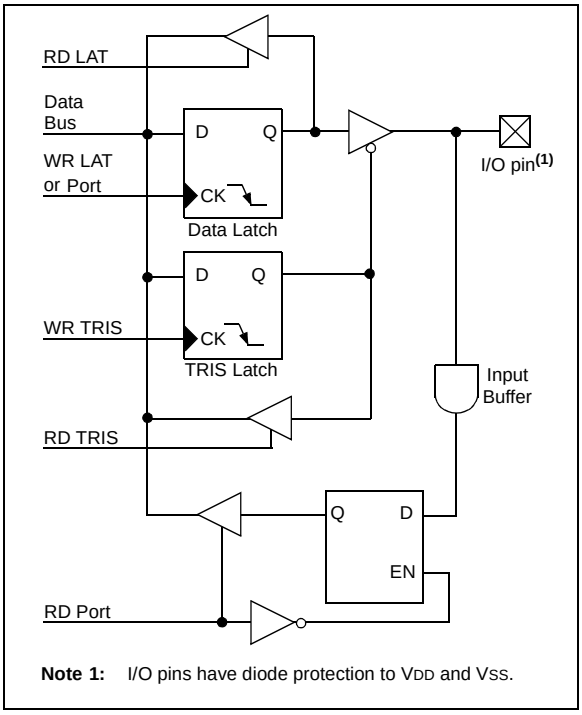

Note 1: I/O pins have diode protection to VDD and VSS.

10.1 PORTA, TRISA and LATA Registers

PORTA is an 8-bit wide, bidirectional port. The corresponding data direction register is TRISA. Setting a TRISA bit (= 1) will make the corresponding PORTA pin an input (i.e., disable the output driver). Clearing a TRISA bit (= 0) will make the corresponding PORTA pin an output (i.e., enable the output driver and put the contents of the output latch on the selected pin).

Reading the PORTA register reads the status of the pins, whereas writing to it, will write to the PORT latch.

The Data Latch (LATA) register is also memory mapped. Read-modify-write operations on the LATA register read and write the latched output value for PORTA.

The RA4 pin is multiplexed with the Timer0 module clock input and one of the comparator outputs to become the RA4/T0CKI/C1OUT pin. Pins RA6 and RA7 are multiplexed with the main oscillator pins; they are enabled as oscillator or I/O pins by the selection of the main oscillator in the Configuration register (see **Section 23.1 "Configuration Bits"** for details). When they are not used as port pins, RA6 and RA7 and their associated TRIS and LAT bits are read as '0'.

The other PORTA pins are multiplexed with analog inputs, the analog VREF+ and VREF- inputs, and the comparator voltage reference output. The operation of pins RA<3:0> and RA5 as analog is selected by setting the ANS<4:0> bits in the ANSEL register which is the default setting after a Power-on Reset.

Pins RA0 through RA5 may also be used as comparator inputs or outputs by setting the appropriate bits in the CM1CON0 and CM2CON0 registers.

Note:	On a Power-on Reset, RA5 and RA<3:0> are configured as analog inputs and read as '0'. RA4 is configured as a digital input.

The RA4/T0CKI/C1OUT pin is a Schmitt Trigger input. All other PORTA pins have TTL input levels and full CMOS output drivers.

The TRISA register controls the drivers of the PORTA pins, even when they are being used as analog inputs. The user should ensure the bits in the TRISA register are maintained set when using them as analog inputs.

EXAMPLE 10-1: INITIALIZING PORTA

```
CLRF    PORTA   ; Initialize PORTA by
                ; clearing output
                ; data latches
CLRF    LATA    ; Alternate method
                ; to clear output
                ; data latches
MOVLW   E0h     ; Configure I/O
MOVWF   ANSEL   ; for digital inputs
MOVLW   0CFh    ; Value used to
                ; initialize data
                ; direction
MOVWF   TRISA   ; Set RA<3:0> as inputs
                ; RA<5:4> as outputs
```

TABLE 10-1: PORTA I/O SUMMARY

Pin	Function	TRIS Setting	I/O	I/O Type	Description
RA0/AN0/C12IN0-	RA0	0	O	DIG	LATA<0> data output; not affected by analog input.
		1	I	TTL	PORTA<0> data input; disabled when analog input enabled.
	AN0	1	I	ANA	ADC input channel 0. Default input configuration on POR; does not affect digital output.
	C12IN0-	1	I	ANA	Comparators C1 and C2 inverting input, channel 0. Analog select is shared with ADC.
RA1/AN1/C12IN1-	RA1	0	O	DIG	LATA<1> data output; not affected by analog input.
		1	I	TTL	PORTA<1> data input; disabled when analog input enabled.
	AN1	1	I	ANA	ADC input channel 1. Default input configuration on POR; does not affect digital output.
	C12IN1-	1	I	ANA	Comparators C1 and C2 inverting input, channel 1. Analog select is shared with ADC.
RA2/AN2/C2IN+ VREF-/CVREF	RA2	0	O	DIG	LATA<2> data output; not affected by analog input. Disabled when CVREF output enabled.
		1	I	TTL	PORTA<2> data input. Disabled when analog functions enabled; disabled when CVREF output enabled.
	AN2	1	I	ANA	ADC input channel 2. Default input configuration on POR; not affected by analog output.
	C2IN+	1	I	ANA	Comparator C2 non-inverting input. Analog selection is shared with ADC.
	VREF-	1	I	ANA	ADC and comparator voltage reference low input.
	CVREF	x	O	ANA	Comparator voltage reference output. Enabling this feature disables digital I/O.
RA3/AN3/C1IN+/ VREF+	RA3	0	O	DIG	LATA<3> data output; not affected by analog input.
		1	I	TTL	PORTA<3> data input; disabled when analog input enabled.
	AN3	1	I	ANA	A/D input channel 3. Default input configuration on POR.
	C1IN+	1	I	ANA	Comparator C1 non-inverting input. Analog selection is shared with ADC.
	VREF+	1	I	ANA	ADC and comparator voltage reference high input.
RA4/T0CKI/C1OUT	RA4	0	O	DIG	LATA<4> data output.
		1	I	ST	PORTA<4> data input; default configuration on POR.
	T0CKI	1	I	ST	Timer0 clock input.
	C1OUT	0	O	DIG	Comparator 1 output; takes priority over port data.
RA5/AN4/$\overline{SS}$/ HLVDIN/C2OUT	RA5	0	O	DIG	LATA<5> data output; not affected by analog input.
		1	I	TTL	PORTA<5> data input; disabled when analog input enabled.
	AN4	1	I	ANA	A/D input channel 4. Default configuration on POR.
	$\overline{SS}$	1	I	TTL	Slave select input for SSP (MSSP module).
	HLVDIN	1	I	ANA	Low-Voltage Detect external trip point input.
	C2OUT	0	O	DIG	Comparator 2 output; takes priority over port data.
OSC2/CLKOUT/ RA6	RA6	0	O	DIG	LATA<6> data output. Enabled in RCIO, INTIO2 and ECIO modes only.
		1	I	TTL	PORTA<6> data input. Enabled in RCIO, INTIO2 and ECIO modes only.
	OSC2	x	O	ANA	Main oscillator feedback output connection (XT, HS and LP modes).
	CLKOUT	x	O	DIG	System cycle clock output (FOSC/4) in RC, INTIO1 and EC Oscillator modes.

Legend: DIG = Digital level output; TTL = TTL input buffer; ST = Schmitt Trigger input buffer; ANA = Analog level input/output; x = Don't care (TRIS bit does not affect port direction or is overridden for this option).

© 2010 Microchip Technology Inc.

TABLE 10-1: PORTA I/O SUMMARY (CONTINUED)

Pin	Function	TRIS Setting	I/O	I/O Type	Description
OSC1/CLKIN/RA7	RA7	0	O	DIG	LATA<7> data output. Disabled in external oscillator modes.
		1	I	TTL	PORTA<7> data input. Disabled in external oscillator modes.
	OSC1	x	I	ANA	Main oscillator input connection.
	CLKIN	x	I	ANA	Main clock input connection.

Legend: DIG = Digital level output; TTL = TTL input buffer; ST = Schmitt Trigger input buffer; ANA = Analog level input/output; x = Don't care (TRIS bit does not affect port direction or is overridden for this option).

TABLE 10-2: SUMMARY OF REGISTERS ASSOCIATED WITH PORTA

Name	Bit 7	Bit 6	Bit 5	Bit 4	Bit 3	Bit 2	Bit 1	Bit 0	Reset Values on page
PORTA	RA7(1)	RA6(1)	RA5	RA4	RA3	RA2	RA1	RA0	62
LATA	LATA7(1)	LATA6(1)	PORTA Data Latch Register (Read and Write to Data Latch)						62
TRISA	TRISA7(1)	TRISA6(1)	PORTA Data Direction Control Register						62
ANSEL	ANS7(2)	ANS6(2)	ANS5(2)	ANS4	ANS3	ANS2	ANS1	ANS0	62
SLRCON	—	—	—	SLRE(2)	SLRD(2)	SLRC	SLRB	SLRA	63
CM1CON0	C1ON	C1OUT	C1OE	C1POL	C1SP	C1R	C1CH1	C1CH0	62
CM2CON0	C2ON	C2OUT	C2OE	C2POL	C2SP	C2R	C2CH1	C2CH0	62
CVRCON	CVREN	CVROE	CVRR	CVRSS	CVR3	CVR2	CVR1	CVR0	61

Legend: — = unimplemented, read as '0'. Shaded cells are not used by PORTA.

Note 1: RA<7:6> and their associated latch and data direction bits are enabled as I/O pins based on oscillator configuration; otherwise, they are read as '0'.

2: Not implemented on PIC18F2XK20 devices.

10.2 PORTB, TRISB and LATB Registers

PORTB is an 8-bit wide, bidirectional port. The corresponding data direction register is TRISB. Setting a TRISB bit (= 1) will make the corresponding PORTB pin an input (i.e., disable the output driver). Clearing a TRISB bit (= 0) will make the corresponding PORTB pin an output (i.e., enable the output driver and put the contents of the output latch on the selected pin).

The Data Latch register (LATB) is also memory mapped. Read-modify-write operations on the LATB register read and write the latched output value for PORTB.

EXAMPLE 10-2: INITIALIZING PORTB

```
CLRF    PORTB   ; Initialize PORTB by
                ; clearing output
                ; data latches
CLRF    LATB    ; Alternate method
                ; to clear output
                ; data latches
CLRF    ANSELH  ; Set RB<4:0> as
                ; digital I/O pins
                ;(required if config bit
                ; PBADEN is set)
MOVLW   0CFh    ; Value used to
                ; initialize data
                ; direction
MOVWF   TRISB   ; Set RB<3:0> as inputs
                ; RB<5:4> as outputs
                ; RB<7:6> as inputs
```

10.3 Additional PORTB Pin Functions

PORTB pins RB<7:4> have an interrupt-on-change option. All PORTB pins have a weak pull-up option. An alternate CCP2 peripheral option is available on RB3.

10.3.1 WEAK PULL-UPS

Each of the PORTB pins has an individually controlled weak internal pull-up. When set, each bit of the WPUB register enables the corresponding pin pull-up. When cleared, the $\overline{\text{RBPU}}$ bit of the INTCON2 register enables pull-ups on all pins which also have their corresponding WPUB bit set. When set, the $\overline{\text{RBPU}}$ bit disables all weak pull-ups. The weak pull-up is automatically turned off when the port pin is configured as an output. The pull-ups are disabled on a Power-on Reset.

Note:	On a Power-on Reset, RB<4:0> are configured as analog inputs by default and read as '0'; RB<7:5> are configured as digital inputs. When the PBADEN Configuration bit is set to '1', RB<4:0> will alternatively be configured as digital inputs on POR.

10.3.2 INTERRUPT-ON-CHANGE

Four of the PORTB pins (RB<7:4>) are individually configurable as interrupt-on-change pins. Control bits in the IOCB register enable (when set) or disable (when clear) the interrupt function for each pin.

When set, the RBIE bit of the INTCON register enables interrupts on all pins which also have their corresponding IOCB bit set. When clear, the RBIE bit disables all interrupt-on-changes.

Only pins configured as inputs can cause this interrupt to occur (i.e., any RB<7:4> pin configured as an output is excluded from the interrupt-on-change comparison).

For enabled interrupt-on-change pins, the values are compared with the old value latched on the last read of PORTB. The 'mismatch' outputs of the last read are OR'd together to set the PORTB Change Interrupt flag bit (RBIF) in the INTCON register.

This interrupt can wake the device from the Sleep mode, or any of the Idle modes. The user, in the Interrupt Service Routine, can clear the interrupt in the following manner:

a) Any read or write of PORTB to clear the mismatch condition (except when PORTB is the source or destination of a MOVFF instruction).
b) Clear the flag bit, RBIF.

A mismatch condition will continue to set the RBIF flag bit. Reading or writing PORTB will end the mismatch condition and allow the RBIF bit to be cleared. The latch holding the last read value is not affected by a $\overline{\text{MCLR}}$ nor Brown-out Reset. After either one of these Resets, the RBIF flag will continue to be set if a mismatch is present.

Note:	If a change on the I/O pin should occur when the read operation is being executed (start of the Q2 cycle), then the RBIF interrupt flag may not get set. Furthermore, since a read or write on a port affects all bits of that port, care must be taken when using multiple pins in Interrupt-on-change mode. Changes on one pin may not be seen while servicing changes on another pin.

The interrupt-on-change feature is recommended for wake-up on key depression operation and operations where PORTB is only used for the interrupt-on-change feature. Polling of PORTB is not recommended while using the interrupt-on-change feature.

10.3.3 ALTERNATE CCP2 OPTION

RB3 can be configured as the alternate peripheral pin for the CCP2 module by clearing the CCP2MX Configuration bit of CONFIG3H. The default state of the CCP2MX Configuration bit is '1' which selects RC1 as the CCP2 peripheral pin.

© 2010 Microchip Technology Inc.

TABLE 10-3: PORTB I/O SUMMARY

Pin	Function	TRIS Setting	I/O	I/O Type	Description
RB0/INT0/FLT0/ AN12	RB0	0	O	DIG	LATB<0> data output; not affected by analog input.
		1	I	TTL	PORTB<0> data input; Programmable weak pull-up. Disabled when analog input enabled.(1)
	INT0	1	I	ST	External interrupt 0 input.
	FLT0	1	I	ST	Enhanced PWM Fault input (ECCP1 module); enabled by software.
	AN12	1	I	ANA	A/D input channel 12.(1)
RB1/INT1/AN10/ C12IN3-/P1C	RB1	0	O	DIG	LATB<1> data output; not affected by analog input.
		1	I	TTL	PORTB<1> data input; Programmable weak pull-up. Disabled when analog input enabled.(1)
	INT1	1	I	ST	External Interrupt 1 input.
	AN10	1	I	ANA	ADC input channel 10.(1)
	C12IN3-	1	I	ANA	Comparators C1 and C2 inverting input, channel 3. Analog select is shared with ADC.
	P1C	0	O	DIG	ECCP PWM output (28-pin devices only).
RB2/INT2/AN8/ P1B	RB2	0	O	DIG	LATB<2> data output; not affected by analog input.
		1	I	TTL	PORTB<2> data input; Programmable weak pull-up. Disabled when analog input enabled.(1)
	INT2	1	I	ST	External interrupt 2 input.
	AN8	1	I	ANA	ADC input channel 8.(1)
	P1B	0	O	DIG	ECCP PWM output (28-pin devices only).
RB3/AN9/C12IN2-/ CCP2	RB3	0	O	DIG	LATB<3> data output; not affected by analog input.
		1	I	TTL	PORTB<3> data input; Programmable weak pull-up. Disabled when analog input enabled.(1)
	AN9	1	I	ANA	ADC input channel 9.(1)
	C12IN2-	1	I	ANA	Comparators C1 and C2 inverting input, channel 2. Analog select is shared with ADC.
	CCP2(2)	0	O	DIG	CCP2 compare and PWM output.
		1	I	ST	CCP2 capture input
RB4/KBI0/AN11/ P1D	RB4	0	O	DIG	LATB<4> data output; not affected by analog input.
		1	I	TTL	PORTB<4> data input; Programmable weak pull-up. Disabled when analog input enabled.(1)
	KBI0	1	I	TTL	Interrupt-on-pin change.
	AN11	1	I	ANA	ADC input channel 11.(1)
	P1D	0	O	DIG	ECCP PWM output (28-pin devices only).
RB5/KBI1/PGM	RB5	0	O	DIG	LATB<5> data output.
		1	I	TTL	PORTB<5> data input; Programmable weak pull-up.
	KBI1	1	I	TTL	Interrupt-on-pin change.
	PGM	x	I	ST	Single-Supply Programming mode entry (ICSP™). Enabled by LVP Configuration bit; all other pin functions disabled.

Legend: DIG = Digital level output; TTL = TTL input buffer; ST = Schmitt Trigger input buffer; ANA = Analog level input/output; x = Don't care (TRIS bit does not affect port direction or is overridden for this option).

Note 1: Configuration on POR is determined by the PBADEN Configuration bit. Pins are configured as analog inputs by default when PBADEN is set and digital inputs when PBADEN is cleared.

2: Alternate assignment for CCP2 when the CCP2MX Configuration bit is '0'. Default assignment is RC1.

3: All other pin functions are disabled when ICSP or ICD are enabled.

TABLE 10-3: PORTB I/O SUMMARY (CONTINUED)

Pin	Function	TRIS Setting	I/O	I/O Type	Description
RB6/KBI2/PGC	RB6	0	O	DIG	LATB<6> data output.
		1	I	TTL	PORTB<6> data input; Programmable weak pull-up.
	KBI2	1	I	TTL	Interrupt-on-pin change.
	PGC	x	I	ST	Serial execution (ICSP) clock input for ICSP and ICD operation.(3)
RB7/KBI3/PGD	RB7	0	O	DIG	LATB<7> data output.
		1	I	TTL	PORTB<7> data input; Programmable weak pull-up.
	KBI3	1	I	TTL	Interrupt-on-pin change.
	PGD	x	O	DIG	Serial execution data output for ICSP and ICD operation.(3)
		x	I	ST	Serial execution data input for ICSP and ICD operation.(3)

Legend: DIG = Digital level output; TTL = TTL input buffer; ST = Schmitt Trigger input buffer; ANA = Analog level input/output; x = Don't care (TRIS bit does not affect port direction or is overridden for this option).

Note 1: Configuration on POR is determined by the PBADEN Configuration bit. Pins are configured as analog inputs by default when PBADEN is set and digital inputs when PBADEN is cleared.

2: Alternate assignment for CCP2 when the CCP2MX Configuration bit is '0'. Default assignment is RC1.

3: All other pin functions are disabled when ICSP or ICD are enabled.

TABLE 10-4: SUMMARY OF REGISTERS ASSOCIATED WITH PORTB

Name	Bit 7	Bit 6	Bit 5	Bit 4	Bit 3	Bit 2	Bit 1	Bit 0	Reset Values on page
PORTB	RB7	RB6	RB5	RB4	RB3	RB2	RB1	RB0	62
LATB	PORTB Data Latch Register (Read and Write to Data Latch)								62
TRISB	PORTB Data Direction Control Register								62
WPUB	WPUB7	WPUB6	WPUB5	WPUB4	WPUB3	WPUB2	WPUB1	WPUB0	62
IOCB	IOCB7	IOCB6	IOCB5	IOCB4	—	—	—	—	62
SLRCON	—	—	—	SLRE(1)	SLRD(1)	SLRC	SLRB	SLRA	63
INTCON	GIE/GIEH	PEIE/GIEL	TMR0IE	INT0IE	RBIE	TMR0IF	INT0IF	RBIF	59
INTCON2	$\overline{\text{RBPU}}$	INTEDG0	INTEDG1	INTEDG2	—	TMR0IP	—	RBIP	59
INTCON3	INT2IP	INT1IP	—	INT2IE	INT1IE	—	INT2IF	INT1IF	59
ANSELH	—	—	—	ANS12	ANS11	ANS10	ANS9	ANS8	62

Legend: — = unimplemented, read as '0'. Shaded cells are not used by PORTB.

Note 1: Not implemented on PIC18F2XK20 devices.

© 2010 Microchip Technology Inc.

10.4 PORTC, TRISC and LATC Registers

PORTC is an 8-bit wide, bidirectional port. The corresponding data direction register is TRISC. Setting a TRISC bit (= 1) will make the corresponding PORTC pin an input (i.e., disable the output driver). Clearing a TRISC bit (= 0) will make the corresponding PORTC pin an output (i.e., enable the output driver and put the contents of the output latch on the selected pin).

The Data Latch register (LATC) is also memory mapped. Read-modify-write operations on the LATC register read and write the latched output value for PORTC.

PORTC is multiplexed with several peripheral functions (Table 10-5). The pins have Schmitt Trigger input buffers. RC1 is the default configuration for the CCP2 peripheral pin. The CCP2 function can be relocated to the RB3 pin by clearing the CCP2MX bit of Configuration Word CONFIG3H. The default state of the CCP2MX Configuration bit is '1'.

When enabling peripheral functions, care should be taken in defining TRIS bits for each PORTC pin. The EUSART and MSSP peripherals override the TRIS bit to make a pin an output or an input, depending on the peripheral configuration. Refer to the corresponding peripheral section for additional information.

Note:	On a Power-on Reset, these pins are configured as digital inputs.

The contents of the TRISC register are affected by peripheral overrides. Reading TRISC always returns the current contents, even though a peripheral device may be overriding one or more of the pins.

EXAMPLE 10-3: INITIALIZING PORTC

```
CLRF    PORTC   ; Initialize PORTC by
                ; clearing output
                ; data latches
CLRF    LATC    ; Alternate method
                ; to clear output
                ; data latches
MOVLW   0CFh    ; Value used to
                ; initialize data
                ; direction
MOVWF   TRISC   ; Set RC<3:0> as inputs
                ; RC<5:4> as outputs
                ; RC<7:6> as inputs
```

TABLE 10-5: PORTC I/O SUMMARY

Pin	Function	TRIS Setting	I/O	I/O Type	Description
RC0/T1OSO/ T13CKI	RC0	0	O	DIG	LATC<0> data output.
		1	I	ST	PORTC<0> data input.
	T1OSO	x	O	ANA	Timer1 oscillator output; enabled when Timer1 oscillator enabled. Disables digital I/O.
	T13CKI	1	I	ST	Timer1/Timer3 counter input.
RC1/T1OSI/CCP2	RC1	0	O	DIG	LATC<1> data output.
		1	I	ST	PORTC<1> data input.
	T1OSI	x	I	ANA	Timer1 oscillator input; enabled when Timer1 oscillator enabled. Disables digital I/O.
	CCP2(1)	0	O	DIG	CCP2 compare and PWM output; takes priority over port data.
		1	I	ST	CCP2 capture input.
RC2/CCP1/P1A	RC2	0	O	DIG	LATC<2> data output.
		1	I	ST	PORTC<2> data input.
	CCP1	0	O	DIG	ECCP1 compare or PWM output; takes priority over port data.
		1	I	ST	ECCP1 capture input.
	P1A	0	O	DIG	ECCP1 Enhanced PWM output, channel A. May be configured for tri-state during Enhanced PWM shutdown events. Takes priority over port data.
RC3/SCK/SCL	RC3	0	O	DIG	LATC<3> data output.
		1	I	ST	PORTC<3> data input.
	SCK	0	O	DIG	SPI clock output (MSSP module); takes priority over port data.
		1	I	ST	SPI clock input (MSSP module).
	SCL	0	O	DIG	I^2C™ clock output (MSSP module); takes priority over port data.
		1	I	I^2C/SMB	I^2C clock input (MSSP module); input type depends on module setting.
RC4/SDI/SDA	RC4	0	O	DIG	LATC<4> data output.
		1	I	ST	PORTC<4> data input.
	SDI	1	I	ST	SPI data input (MSSP module).
	SDA	1	O	DIG	I^2C data output (MSSP module); takes priority over port data.
		1	I	I^2C/SMB	I^2C data input (MSSP module); input type depends on module setting.
RC5/SDO	RC5	0	O	DIG	LATC<5> data output.
		1	I	ST	PORTC<5> data input.
	SDO	0	O	DIG	SPI data output (MSSP module); takes priority over port data.
RC6/TX/CK	RC6	0	O	DIG	LATC<6> data output.
		1	I	ST	PORTC<6> data input.
	TX	1	O	DIG	Asynchronous serial transmit data output (USART module); takes priority over port data. User must configure as output.
	CK	1	O	DIG	Synchronous serial clock output (USART module); takes priority over port data.
		1	I	ST	Synchronous serial clock input (USART module).
RC7/RX/DT	RC7	0	O	DIG	LATC<7> data output.
		1	I	ST	PORTC<7> data input.
	RX	1	I	ST	Asynchronous serial receive data input (USART module).
	DT	1	O	DIG	Synchronous serial data output (USART module); takes priority over port data.
		1	I	ST	Synchronous serial data input (USART module). User must configure as an input.

Legend: DIG = Digital level output; TTL = TTL input buffer; ST = Schmitt Trigger input buffer; ANA = Analog level input/output; I^2C/SMB = I^2C/SMBus input buffer; x = Don't care (TRIS bit does not affect port direction or is overridden for this option).

Note 1: Default assignment for CCP2 when the CCP2MX Configuration bit is set. Alternate assignment is RB3.

© 2010 Microchip Technology Inc.

TABLE 10-6: SUMMARY OF REGISTERS ASSOCIATED WITH PORTC

Name	Bit 7	Bit 6	Bit 5	Bit 4	Bit 3	Bit 2	Bit 1	Bit 0	Reset Values on page
PORTC	RC7	RC6	RC5	RC4	RC3	RC2	RC1	RC0	62
LATC	PORTC Data Latch Register (Read and Write to Data Latch)								62
TRISC	PORTC Data Direction Control Register								62
T1CON	RD16	T1RUN	T1CKPS1	T1CKPS0	T1OSCEN	$\overline{\text{T1SYNC}}$	TMR1CS	TMR1ON	60
T3CON	RD16	T3CCP2	T3CKPS1	T3CKPS0	T3CCP1	$\overline{\text{T3SYNC}}$	TMR3CS	TMR3ON	61
TXSTA	CSRC	TX9	TXEN	SYNC	SENDB	BRGH	TRMT	TX9D	61
RCSTA	SPEN	RX9	SREN	CREN	ADDEN	FERR	OERR	RX9D	61
SSPCON1	WCOL	SSPOV	SSPEN	CKP	SSPM3	SSPM2	SSPM1	SSPM0	60
CCP1CON	P1M1	P1M0	DC1B1	DC1B0	CCP1M3	CCP1M2	CCP1M1	CCP1M0	61
CCP2CON	—	—	DC2B1	DC2B0	CCP2M3	CCP2M2	CCP2M1	CCP2M0	61
ECCP1AS	ECCPASE	ECCPAS2	ECCPAS1	ECCPAS0	PSSAC1	PSSAC0	PSSBD1	PSSBD0	61
SLRCON	—	—	—	SLRE(1)	SLRD(1)	SLRC	SLRB	SLRA	63

Legend: — = unimplemented, read as '0'. Shaded cells are not used by PORTC.

Note 1: Not implemented on PIC18F2XK20 devices.

10.5 PORTD, TRISD and LATD Registers

Note:	PORTD is only available on 40/44-pin devices.

PORTD is an 8-bit wide, bidirectional port. The corresponding data direction register is TRISD. Setting a TRISD bit (= 1) will make the corresponding PORTD pin an input (i.e., disable the output driver). Clearing a TRISD bit (= 0) will make the corresponding PORTD pin an output (i.e., enable the output driver and put the contents of the output latch on the selected pin).

The Data Latch register (LATD) is also memory mapped. Read-modify-write operations on the LATD register read and write the latched output value for PORTD.

All pins on PORTD are implemented with Schmitt Trigger input buffers. Each pin is individually configurable as an input or output.

Three of the PORTD pins are multiplexed with outputs P1B, P1C and P1D of the enhanced CCP module. The operation of these additional PWM output pins is covered in greater detail in **Section 16.0 "Enhanced Capture/Compare/PWM (ECCP) Module"**.

Note:	On a Power-on Reset, these pins are configured as digital inputs.

PORTD can also be configured as an 8-bit wide microprocessor port (Parallel Slave Port) by setting control bit, PSPMODE (TRISE<4>). In this mode, the input buffers are TTL. See **Section 10.9 "Parallel Slave Port"** for additional information on the Parallel Slave Port (PSP).

Note:	When the enhanced PWM mode is used with either dual or quad outputs, the PSP functions of PORTD are automatically disabled.

EXAMPLE 10-4: INITIALIZING PORTD

```
CLRF    PORTD   ; Initialize PORTD by
                ; clearing output
                ; data latches
CLRF    LATD    ; Alternate method
                ; to clear output
                ; data latches
MOVLW   0CFh    ; Value used to
                ; initialize data
                ; direction
MOVWF   TRISD   ; Set RD<3:0> as inputs
                ; RD<5:4> as outputs
                ; RD<7:6> as inputs
```


© 2010 Microchip Technology Inc.

TABLE 10-7: PORTD I/O SUMMARY

Pin	Function	TRIS Setting	I/O	I/O Type	Description
RD0/PSP0	RD0	0	O	DIG	LATD<0> data output.
		1	I	ST	PORTD<0> data input.
	PSP0	x	O	DIG	PSP read data output (LATD<0>); takes priority over port data.
		x	I	TTL	PSP write data input.
RD1/PSP1	RD1	0	O	DIG	LATD<1> data output.
		1	I	ST	PORTD<1> data input.
	PSP1	x	O	DIG	PSP read data output (LATD<1>); takes priority over port data.
		x	I	TTL	PSP write data input.
RD2/PSP2	RD2	0	O	DIG	LATD<2> data output.
		1	I	ST	PORTD<2> data input.
	PSP2	x	O	DIG	PSP read data output (LATD<2>); takes priority over port data.
		x	I	TTL	PSP write data input.
RD3/PSP3	RD3	0	O	DIG	LATD<3> data output.
		1	I	ST	PORTD<3> data input.
	PSP3	x	O	DIG	PSP read data output (LATD<3>); takes priority over port data.
		x	I	TTL	PSP write data input.
RD4/PSP4	RD4	0	O	DIG	LATD<4> data output.
		1	I	ST	PORTD<4> data input.
	PSP4	x	O	DIG	PSP read data output (LATD<4>); takes priority over port data.
		x	I	TTL	PSP write data input.
RD5/PSP5/P1B	RD5	0	O	DIG	LATD<5> data output.
		1	I	ST	PORTD<5> data input.
	PSP5	x	O	DIG	PSP read data output (LATD<5>); takes priority over port data.
		x	I	TTL	PSP write data input.
	P1B	0	O	DIG	ECCP1 Enhanced PWM output, channel B; takes priority over port and PSP data. May be configured for tri-state during Enhanced PWM shutdown events.
RD6/PSP6/P1C	RD6	0	O	DIG	LATD<6> data output.
		1	I	ST	PORTD<6> data input.
	PSP6	x	O	DIG	PSP read data output (LATD<6>); takes priority over port data.
		x	I	TTL	PSP write data input.
	P1C	0	O	DIG	ECCP1 Enhanced PWM output, channel C; takes priority over port and PSP data. May be configured for tri-state during Enhanced PWM shutdown events.
RD7/PSP7/P1D	RD7	0	O	DIG	LATD<7> data output.
		1	I	ST	PORTD<7> data input.
	PSP7	x	O	DIG	PSP read data output (LATD<7>); takes priority over port data.
		x	I	TTL	PSP write data input.
	P1D	0	O	DIG	ECCP1 Enhanced PWM output, channel D; takes priority over port and PSP data. May be configured for tri-state during Enhanced PWM shutdown events.

Legend: DIG = Digital level output; TTL = TTL input buffer; ST = Schmitt Trigger input buffer; x = Don't care (TRIS bit does not affect port direction or is overridden for this option).

TABLE 10-8: SUMMARY OF REGISTERS ASSOCIATED WITH PORTD

Name	Bit 7	Bit 6	Bit 5	Bit 4	Bit 3	Bit 2	Bit 1	Bit 0	Reset Values on page
PORTD(1)	RD7	RD6	RD5	RD4	RD3	RD2	RD1	RD0	62
LATD(1)	PORTD Data Latch Register (Read and Write to Data Latch)								62
TRISD(1)	PORTD Data Direction Control Register								62
TRISE(1)	IBF	OBF	IBOV	PSPMODE	—	TRISE2	TRISE1	TRISE0	62
CCP1CON	P1M1	P1M0	DC1B1	DC1B0	CCP1M3	CCP1M2	CCP1M1	CCP1M0	61
SLRCON	—	—	—	SLRE(1)	SLRD(1)	SLRC	SLRB	SLRA	63

Legend: — = unimplemented, read as '0'. Shaded cells are not used by PORTD.

Note 1: Not implemented on PIC18F2XK20 devices.

© 2010 Microchip Technology Inc.

10.6 PORTE, TRISE and LATE Registers

Depending on the particular PIC18F2XK20/4XK20 device selected, PORTE is implemented in two different ways.

10.6.1 PORTE IN PIC18F4XK20 DEVICES

For PIC18F4XK20 devices, PORTE is a 4-bit wide port. Three pins (RE0/RD/AN5, RE1/WR/AN6 and RE2/CS/AN7) are individually configurable as inputs or outputs. These pins have Schmitt Trigger input buffers. When selected as an analog input, these pins will read as '0's.

The corresponding data direction register is TRISE. Setting a TRISE bit (= 1) will make the corresponding PORTE pin an input (i.e., disable the output driver). Clearing a TRISE bit (= 0) will make the corresponding PORTE pin an output (i.e., enable the output driver and put the contents of the output latch on the selected pin).

TRISE controls the direction of the RE pins, even when they are being used as analog inputs. The user must make sure to keep the pins configured as inputs when using them as analog inputs.

Note:	On a Power-on Reset, RE<2:0> are configured as analog inputs.

The upper four bits of the TRISE register also control the operation of the Parallel Slave Port. Their operation is explained in Register 10-1.

The Data Latch register (LATE) is also memory mapped. Read-modify-write operations on the LATE register, read and write the latched output value for PORTE.

The fourth pin of PORTE ($\overline{MCLR}$/VPP/RE3) is an input only pin. Its operation is controlled by the MCLRE Configuration bit. When selected as a port pin (MCLRE = 0), it functions as a digital input only pin; as such, it does not have TRIS or LAT bits associated with its operation. Otherwise, it functions as the device's Master Clear input. In either configuration, RE3 also functions as the programming voltage input during programming.

Note:	On a Power-on Reset, RE3 is enabled as a digital input only if Master Clear functionality is disabled.

EXAMPLE 10-5: INITIALIZING PORTE

```
CLRF    PORTE   ; Initialize PORTE by
                ; clearing output
                ; data latches
CLRF    LATE    ; Alternate method
                ; to clear output
                ; data latches
MOVLW   1Fh     ; Configure analog pins
ANDWF   ANSEL,w ; for digital only
MOVLW   05h     ; Value used to
                ; initialize data
                ; direction
MOVWF   TRISE   ; Set RE<0> as input
                ; RE<1> as output
                ; RE<2> as input
```

10.6.2 PORTE IN PIC18F2XK20 DEVICES

For PIC18F2XK20 devices, PORTE is only available when Master Clear functionality is disabled (MCLR = 0). In these cases, PORTE is a single bit, input only port comprised of RE3 only. The pin operates as previously described.

REGISTER 10-1: TRISE: PORTE/PSP CONTROL REGISTER (PIC18F4XK20 DEVICES ONLY)

R-0	R-0	R/W-0	R/W-0	U-0	R/W-1	R/W-1	R/W-1
IBF	OBF	IBOV	PSPMODE	—	TRISE2	TRISE1	TRISE0
bit 7							bit 0

Legend:			
R = Readable bit	W = Writable bit	U = Unimplemented bit, read as ‘0’	
-n = Value at POR	‘1’ = Bit is set	‘0’ = Bit is cleared	x = Bit is unknown

bit 7 **IBF:** Input Buffer Full Status bit
1 = A word has been received and waiting to be read by the CPU
0 = No word has been received

bit 6 **OBF:** Output Buffer Full Status bit
1 = The output buffer still holds a previously written word
0 = The output buffer has been read

bit 5 **IBOV:** Input Buffer Overflow Detect bit (in Microprocessor mode)
1 = A write occurred when a previously input word has not been read (must be cleared by software)
0 = No overflow occurred

bit 4 **PSPMODE:** Parallel Slave Port Mode Select bit
1 = Parallel Slave Port mode
0 = General purpose I/O mode

bit 3 **Unimplemented:** Read as ‘0’

bit 2 **TRISE2:** RE2 Direction Control bit
1 = Input
0 = Output

bit 1 **TRISE1:** RE1 Direction Control bit
1 = Input
0 = Output

bit 0 **TRISE0:** RE0 Direction Control bit
1 = Input
0 = Output

© 2010 Microchip Technology Inc.

TABLE 10-9: PORTE I/O SUMMARY

Pin	Function	TRIS Setting	I/O	I/O Type	Description
RE0/$\overline{RD}$/AN5	RE0	0	O	DIG	LATE<0> data output; not affected by analog input.
		1	I	ST	PORTE<0> data input; disabled when analog input enabled.
	$\overline{RD}$	1	I	TTL	PSP read enable input (PSP enabled).
	AN5	1	I	ANA	A/D input channel 5; default input configuration on POR.
RE1/$\overline{WR}$/AN6	RE1	0	O	DIG	LATE<1> data output; not affected by analog input.
		1	I	ST	PORTE<1> data input; disabled when analog input enabled.
	$\overline{WR}$	1	I	TTL	PSP write enable input (PSP enabled).
	AN6	1	I	ANA	A/D input channel 6; default input configuration on POR.
RE2/$\overline{CS}$/AN7	RE2	0	O	DIG	LATE<2> data output; not affected by analog input.
		1	I	ST	PORTE<2> data input; disabled when analog input enabled.
	$\overline{CS}$	1	I	TTL	PSP write enable input (PSP enabled).
	AN7	1	I	ANA	A/D input channel 7; default input configuration on POR.
$\overline{MCLR}$/VPP/ RE3(1,2)	$\overline{MCLR}$	—	I	ST	External Master Clear input; enabled when MCLRE Configuration bit is set.
	VPP	—	I	ANA	High-voltage detection; used for ICSP™ mode entry detection. Always available, regardless of pin mode.
	RE3	—(2)	I	ST	PORTE<3> data input; enabled when MCLRE Configuration bit is clear.

Legend: DIG = Digital level output; TTL = TTL input buffer; ST = Schmitt Trigger input buffer; ANA = Analog level input/output; x = Don't care (TRIS bit does not affect port direction or is overridden for this option).

Note 1: RE3 is available on both PIC18F2XK20 and PIC18F4XK20 devices. All other PORTE pins are only implemented on PIC18F4XK20 devices.

2: RE3 does not have a corresponding TRIS bit to control data direction.

TABLE 10-10: SUMMARY OF REGISTERS ASSOCIATED WITH PORTE

Name	Bit 7	Bit 6	Bit 5	Bit 4	Bit 3	Bit 2	Bit 1	Bit 0	Reset Values on page
PORTE	—	—	—	—	RE3(1,2)	RE2	RE1	RE0	62
LATE(2)	—	—	—	—	—	LATE Data Output Register			62
TRISE(3)	IBF	OBF	IBOV	PSPMODE	—	TRISE2	TRISE1	TRISE0	62
SLRCON	—	—	—	SLRE(3)	SLRD(3)	SLRC	SLRB	SLRA	63
ANSEL	ANS7(3)	ANS6(3)	ANS5(3)	ANS4	ANS3	ANS2	ANS1	ANS0	62

Legend: — = unimplemented, read as '0'. Shaded cells are not used by PORTE.

Note 1: Implemented only when Master Clear functionality is disabled (MCLRE Configuration bit = 0).

2: RE3 is the only PORTE bit implemented on both PIC18F2XK20 and PIC18F4XK20 devices. All other bits are implemented only when PORTE is implemented (i.e., PIC18F4XK20 devices).

3: Unimplemented on PIC18F2XK20 devices.

10.7 Port Analog Control

Some port pins are multiplexed with analog functions such as the Analog-to-Digital Converter and comparators. When these I/O pins are to be used as analog inputs it is necessary to disable the digital input buffer to avoid excessive current caused by improper biasing of the digital input. Individual control of the digital input buffers on pins which share analog functions is provided by the ANSEL and ANSELH registers. Setting an ANSx bit high will disable the associated digital input buffer and cause all reads of that pin to return '0' while allowing analog functions of that pin to operate correctly.

The state of the ANSx bits has no affect on digital output functions. A pin with the associated TRISx bit clear and ANSx bit set will still operate as a digital output but the input mode will be analog. This can cause unexpected behavior when performing read-modify-write operations on the affected port.

REGISTER 10-2: ANSEL: ANALOG SELECT REGISTER 1

R/W-1	R/W-1	R/W-1	R/W-1	R/W-1	R/W-1	R/W-1	R/W-1
ANS7(1)	ANS6(1)	ANS5(1)	ANS4	ANS3	ANS2	ANS1	ANS0
bit 7							bit 0

Legend:			
R = Readable bit	W = Writable bit	U = Unimplemented bit, read as '0'	
-n = Value at POR	'1' = Bit is set	'0' = Bit is cleared	x = Bit is unknown

bit 7 **ANS7:** RE2 Analog Select Control bit(1)
1 = Digital input buffer of RE2 is disabled
0 = Digital input buffer of RE2 is enabled

bit 6 **ANS6:** RE1 Analog Select Control bit(1)
1 = Digital input buffer of RE1 is disabled
0 = Digital input buffer of RE1 is enabled

bit 5 **ANS5:** RE0 Analog Select Control bit(1)
1 = Digital input buffer of RE0 is disabled
0 = Digital input buffer of RE0 is enabled

bit 4 **ANS4:** RA5 Analog Select Control bit
1 = Digital input buffer of RA5 is disabled
0 = Digital input buffer of RA5 is enabled

bit 3 **ANS3:** RA3 Analog Select Control bit
1 = Digital input buffer of RA3 is disabled
0 = Digital input buffer of RA3 is enabled

bit 2 **ANS2:** RA2 Analog Select Control bit
1 = Digital input buffer of RA2 is disabled
0 = Digital input buffer of RA2 is enabled

bit 1 **ANS1:** RA1 Analog Select Control bit
1 = Digital input buffer of RA1 is disabled
0 = Digital input buffer of RA1 is enabled

bit 0 **ANS0:** RA0 Analog Select Control bit
1 = Digital input buffer of RA0 is disabled
0 = Digital input buffer of RA0 is enabled

Note 1: These bits are not implemented on PIC18F2XK20 devices.

© 2010 Microchip Technology Inc.

REGISTER 10-3: ANSELH: ANALOG SELECT REGISTER 2

U-0	U-0	U-0	R/W-1(1)	R/W-1(1)	R/W-1(1)	R/W-1(1)	R/W-1(1)
—	—	—	ANS12	ANS11	ANS10	ANS9	ANS8
bit 7							bit 0

Legend:			
R = Readable bit	W = Writable bit	U = Unimplemented bit, read as '0'	
-n = Value at POR	'1' = Bit is set	'0' = Bit is cleared	x = Bit is unknown

bit 7-5 **Unimplemented:** Read as '0'

bit 4 **ANS12:** RB0 Analog Select Control bit
1 = Digital input buffer of RB0 is disabled
0 = Digital input buffer of RB0 is enabled

bit 3 **ANS11:** RB4 Analog Select Control bit
1 = Digital input buffer of RB4 is disabled
0 = Digital input buffer of RB4 is enabled

bit 2 **ANS10:** RB1 Analog Select Control bit
1 = Digital input buffer of RB1 is disabled
0 = Digital input buffer of RB1 is enabled

bit 1 **ANS9:** RB3 Analog Select Control bit
1 = Digital input buffer of RB3 is disabled
0 = Digital input buffer of RB3 is enabled

bit 0 **ANS8:** RB2 Analog Select Control bit
1 = Digital input buffer of RB2 is disabled
0 = Digital input buffer of RB2 is enabled

Note 1: Default state is determined by the PBADEN bit of CONFIG3H. The default state is '0' When PBADEN = '0'.

10.8 Port Slew Rate Control

The output slew rate of each port is programmable to select either the standard transition rate or a reduced transition rate of 0.1 times the standard to minimize EMI. The reduced transition time is the default slew rate for all ports.

REGISTER 10-4: SLRCON: SLEW RATE CONTROL REGISTER

U-0	U-0	U-0	R/W-1	R/W-1	R/W-1	R/W-1	R/W-1
—	—	—	SLRE(1)	SLRD(1)	SLRC	SLRB	SLRA
bit 7							bit 0

Legend:			
R = Readable bit	W = Writable bit	U = Unimplemented bit, read as ‘0’	
-n = Value at POR	‘1’ = Bit is set	‘0’ = Bit is cleared	x = Bit is unknown

bit 7-5 **Unimplemented:** Read as ‘0’

bit 4 **SLRE:** PORTE Slew Rate Control bit(1)
1 = All outputs on PORTE slew at a limited rate
0 = All outputs on PORTE slew at the standard rate

bit 3 **SLRD:** PORTD Slew Rate Control bit(1)
1 = All outputs on PORTD slew at a limited rate
0 = All outputs on PORTD slew at the standard rate

bit 2 **SLRC:** PORTC Slew Rate Control bit
1 = All outputs on PORTC slew at a limited rate
0 = All outputs on PORTC slew at the standard rate

bit 1 **SLRB:** PORTB Slew Rate Control bit
1 = All outputs on PORTB slew at a limited rate
0 = All outputs on PORTB slew at the standard rate

bit 0 **SLRA:** PORTA Slew Rate Control bit
1 = All outputs on PORTA slew at a limited rate(2)
0 = All outputs on PORTA slew at the standard rate

Note 1: These bits are not implemented on PIC18F2XK20 devices.
2: The slew rate of RA6 defaults to standard rate when the pin is used as CLKOUT.

© 2010 Microchip Technology Inc.

10.9 Parallel Slave Port

Note:	The Parallel Slave Port is only available on PIC18F4XK20 devices.

In addition to its function as a general I/O port, PORTD can also operate as an 8-bit wide Parallel Slave Port (PSP) or microprocessor port. PSP operation is controlled by the 4 upper bits of the TRISE register (Register 10-1). Setting control bit, PSPMODE (TRISE<4>), enables PSP operation as long as the enhanced CCP module is not operating in dual output or quad output PWM mode. In Slave mode, the port is asynchronously readable and writable by the external world.

The PSP can directly interface to an 8-bit microprocessor data bus. The external microprocessor can read or write the PORTD latch as an 8-bit latch. Setting the control bit, PSPMODE, enables the PORTE I/O pins to become control inputs for the microprocessor port. When set, port pin RE0 is the $\overline{RD}$ input, RE1 is the $\overline{WR}$ input and RE2 is the $\overline{CS}$ (Chip Select) input. For this functionality, the corresponding data direction bits of the TRISE register (TRISE<2:0>) must be configured as inputs (set) and the ANSEL<7:5> bits must be cleared.

A write to the PSP occurs when both the $\overline{CS}$ and $\overline{WR}$ lines are first detected low and ends when either are detected high. The PSPIF and IBF flag bits are both set when the write ends.

A read from the PSP occurs when both the $\overline{CS}$ and $\overline{RD}$ lines are first detected low. The data in PORTD is read out and the OBF bit is clear. If the user writes new data to PORTD to set OBF, the data is immediately read out; however, the OBF bit is not set.

When either the $\overline{CS}$ or $\overline{RD}$ lines are detected high, the PORTD pins return to the input state and the PSPIF bit is set. User applications should wait for PSPIF to be set before servicing the PSP; when this happens, the IBF and OBF bits can be polled and the appropriate action taken.

The timing for the control signals in Write and Read modes is shown in Figure 10-3 and Figure 10-4, respectively.

FIGURE 10-2: PORTD AND PORTE BLOCK DIAGRAM (PARALLEL SLAVE PORT)

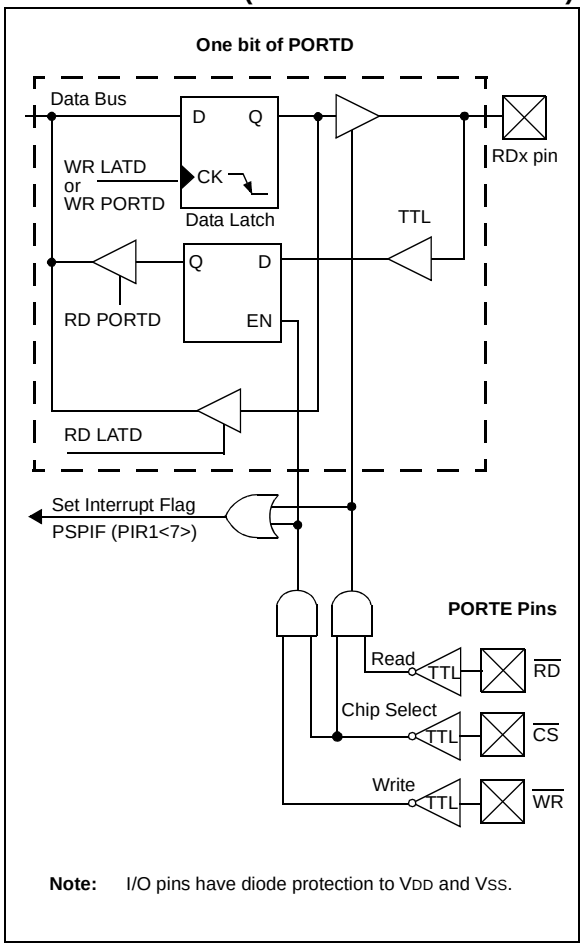

Note: I/O pins have diode protection to VDD and VSS.

FIGURE 10-3: PARALLEL SLAVE PORT WRITE WAVEFORMS

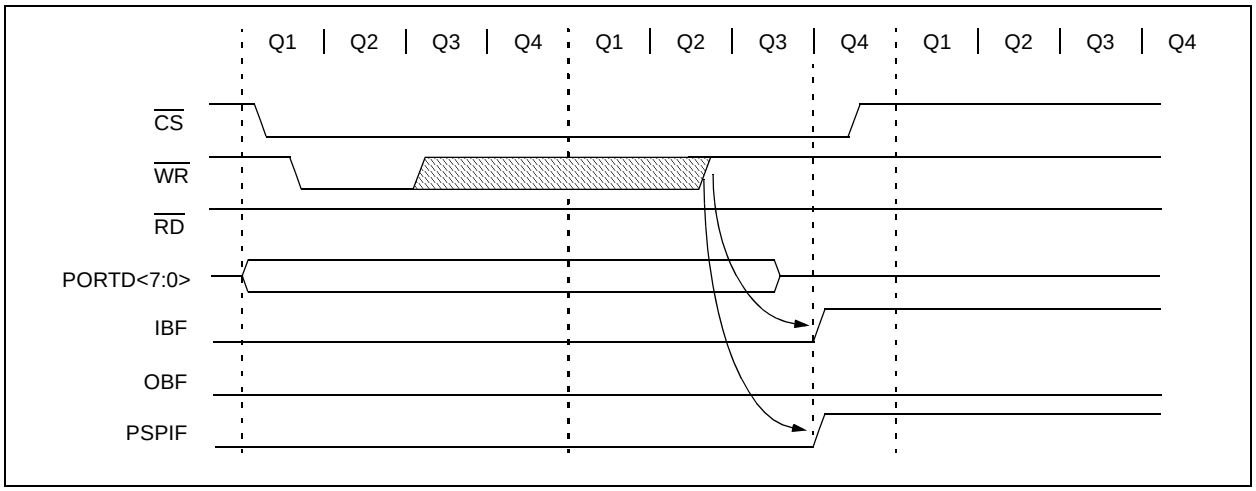

FIGURE 10-4: PARALLEL SLAVE PORT READ WAVEFORMS

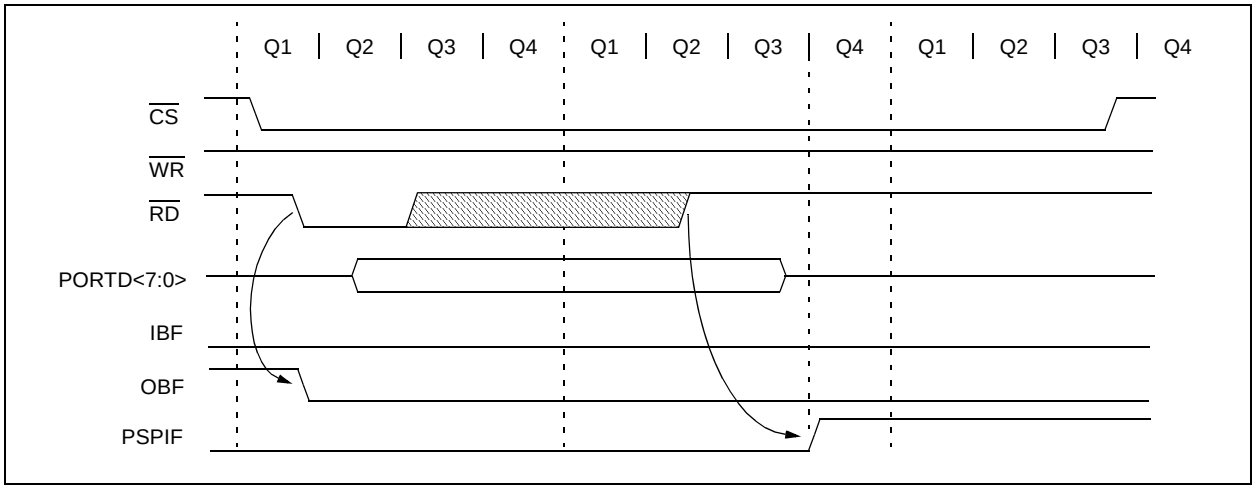

© 2010 Microchip Technology Inc.

TABLE 10-11: REGISTERS ASSOCIATED WITH PARALLEL SLAVE PORT

Name	Bit 7	Bit 6	Bit 5	Bit 4	Bit 3	Bit 2	Bit 1	Bit 0	Reset Values on page
PORTD(1)	RD7	RD6	RD5	RD4	RD3	RD2	RD1	RD0	62
LATD(1)	PORTD Data Latch Register (Read and Write to Data Latch)								62
TRISD(1)	PORTD Data Direction Control Register								62
PORTE	—	—	—	—	RE3	RE2(1)	RE1(1)	RE0(1)	62
LATE(1)	—	—	—	—	—	LATE Data Output bits			62
TRISE(1)	IBF	OBF	IBOV	PSPMODE	—	TRISE2	TRISE1	TRISE0	62
SLRCON	—	—	—	SLRE(1)	SLRD(1)	SLRC	SLRB	SLRA	63
INTCON	GIE/GIEH	PEIE/GIEL	TMR0IE	INT0IE	RBIE	TMR0IF	INT0IF	RBIF	59
PIR1	PSPIF(1)	ADIF	RCIF	TXIF	SSPIF	CCP1IF	TMR2IF	TMR1IF	62
PIE1	PSPIE(1)	ADIE	RCIE	TXIE	SSPIE	CCP1IE	TMR2IE	TMR1IE	62
IPR1	PSPIP(1)	ADIP	RCIP	TXIP	SSPIP	CCP1IP	TMR2IP	TMR1IP	62
ANSEL	ANS7(1)	ANS6(1)	ANS5(1)	ANS4	ANS3	ANS2	ANS1	ANS0	62

Legend: — = unimplemented, read as '0'. Shaded cells are not used by the Parallel Slave Port.

Note 1: Unimplemented on PIC18F2XK20 devices.

NOTES:

© 2010 Microchip Technology Inc.

11.0 CAPTURE/COMPARE/PWM (CCP) MODULES

PIC18F2XK20/4XK20 devices have two CCP Capture/Compare/PWM) modules. Each module contains a 16-bit register which can operate as a 16-bit Capture register, a 16-bit Compare register or a PWM Master/Slave Duty Cycle register.

CCP1 is implemented as an enhanced CCP module with standard Capture and Compare modes and enhanced PWM modes. The ECCP implementation is discussed in **Section 16.0 "Enhanced Capture/Compare/PWM (ECCP) Module"**. CCP2 is implemented as a standard CCP module without the enhanced features.

The Capture and Compare operations described in this chapter apply to both standard and enhanced CCP modules.

Note: Throughout this section and **Section 16.0 "Enhanced Capture/Compare/PWM (ECCP) Module"**, references to the register and bit names for CCP modules are referred to generically by the use of 'x' or 'y' in place of the specific module number. Thus, "CCPxCON" might refer to the control register for CCP1, CCP2 or ECCP1. "CCPxCON" is used throughout these sections to refer to the module control register, regardless of whether the CCP module is a standard or enhanced implementation.

REGISTER 11-1: CCP2CON: STANDARD CAPTURE/COMPARE/PWM CONTROL REGISTER

U-0	U-0	R/W-0	R/W-0	R/W-0	R/W-0	R/W-0	R/W-0
—	—	DC2B1	DC2B0	CCP2M3	CCP2M2	CCP2M1	CCP2M0
bit 7							bit 0

Legend:			
R = Readable bit	W = Writable bit	U = Unimplemented bit, read as '0'	
-n = Value at POR	'1' = Bit is set	'0' = Bit is cleared	x = Bit is unknown

bit 7-6 **Unimplemented:** Read as '0'

bit 5-4 **DC2B<1:0>**: PWM Duty Cycle bit 1 and bit 0 for CCP2 Module

Capture mode:
Unused.

Compare mode:
Unused.

PWM mode:
These bits are the two LSbs (bit 1 and bit 0) of the 10-bit PWM duty cycle. The eight MSbs (DC2B<9:2>) of the duty cycle are found in CCPR2L.

bit 3-0 **CCP2M<3:0>**: CCP2 Mode Select bits

0000 = Capture/Compare/PWM disabled (resets CCP2 module)
0001 = Reserved
0010 = Compare mode, toggle output on match (CCP2IF bit is set)
0011 = Reserved
0100 = Capture mode, every falling edge
0101 = Capture mode, every rising edge
0110 = Capture mode, every 4th rising edge
0111 = Capture mode, every 16th rising edge
1000 = Compare mode: initialize CCP2 pin low; on compare match, force CCP2 pin high (CCP2IF bit is set)
1001 = Compare mode: initialize CCP2 pin high; on compare match, force CCP2 pin low (CCP2IF bit is set)
1010 = Compare mode: generate software interrupt on compare match (CCP2IF bit is set, CCP2 pin reflects I/O state)
1011 = Compare mode: trigger special event, reset timer, start A/D conversion on CCP2 match (CCP2IF bit is set)
11xx = PWM mode

11.1 CCP Module Configuration

Each Capture/Compare/PWM module is associated with a control register (generically, CCPxCON) and a data register (CCPRx). The data register, in turn, is comprised of two 8-bit registers: CCPRxL (low byte) and CCPRxH (high byte). All registers are both readable and writable.

11.1.1 CCP MODULES AND TIMER RESOURCES

The CCP modules utilize Timers 1, 2 or 3, depending on the mode selected. Timer1 and Timer3 are available to modules in Capture or Compare modes, while Timer2 is available for modules in PWM mode.

TABLE 11-1: CCP MODE – TIMER RESOURCE

CCP/ECCP Mode	Timer Resource
Capture	Timer1 or Timer3
Compare	Timer1 or Timer3
PWM	Timer2

The assignment of a particular timer to a module is determined by the Timer-to-CCP enable bits in the T3CON register (Register 15-1). Both modules can be active at the same time and can share the same timer resource if they are configured to operate in the same mode (Capture/Compare or PWM). The interactions between the two modules are summarized in Figure 11-1 and Figure 11-2. In Asynchronous Counter mode, the capture operation will not work reliably.

11.1.2 CCP2 PIN ASSIGNMENT

The pin assignment for CCP2 (Capture input, Compare and PWM output) can change, based on device configuration. The CCP2MX Configuration bit determines the pin with which CCP2 is multiplexed. By default, it is assigned to RC1 (CCP2MX = 1). If the Configuration bit is cleared, CCP2 is multiplexed with RB3.

Changing the pin assignment of CCP2 does not automatically change any requirements for configuring the port pin. Users must always verify that the appropriate TRIS register is configured correctly for CCP2 operation, regardless of where it is located.

TABLE 11-2: INTERACTIONS BETWEEN CCP1 AND CCP2 FOR TIMER RESOURCES

CCP1 Mode	CCP2 Mode	Interaction
Capture	Capture	Each module can use TMR1 or TMR3 as the time base. The time base can be different for each CCP.
Capture	Compare	CCP2 can be configured for the Special Event Trigger to reset TMR1 or TMR3 (depending upon which time base is used). Automatic A/D conversions on trigger event can also be done. Operation of CCP1 could be affected if it is using the same timer as a time base.
Compare	Capture	CCP1 can be configured for the Special Event Trigger to reset TMR1 or TMR3 (depending upon which time base is used). Operation of CCP2 could be affected if it is using the same timer as a time base.
Compare	Compare	Either module can be configured for the Special Event Trigger to reset the time base. Automatic A/D conversions on CCP2 trigger event can be done. Conflicts may occur if both modules are using the same time base.
Capture	PWM	None
Compare	PWM	None
PWM(1)	Capture	None
PWM(1)	Compare	None
PWM(1)	PWM	Both PWMs will have the same frequency and update rate (TMR2 interrupt).

Note 1: Includes standard and enhanced PWM operation.

© 2010 Microchip Technology Inc.

11.2 Capture Mode

In Capture mode, the CCPRxH:CCPRxL register pair captures the 16-bit value of the TMR1 or TMR3 registers when an event occurs on the corresponding CCPx pin. An event is defined as one of the following:

- every falling edge
- every rising edge
- every 4th rising edge
- every 16th rising edge

The event is selected by the mode select bits, CCPxM<3:0> of the CCPxCON register. When a capture is made, the interrupt request flag bit, CCPxIF, is set; it must be cleared by software. If another capture occurs before the value in register CCPRx is read, the old captured value is overwritten by the new captured value.

11.2.1 CCP PIN CONFIGURATION

In Capture mode, the appropriate CCPx pin should be configured as an input by setting the corresponding TRIS direction bit.

Note:	If the CCPx pin is configured as an output, a write to the port can cause a capture condition.

11.2.2 TIMER1/TIMER3 MODE SELECTION

The timers that are to be used with the capture feature (Timer1 and/or Timer3) must be running in Timer mode or Synchronized Counter mode. In Asynchronous Counter mode, the capture operation may not work. The timer to be used with each CCP module is selected in the T3CON register (see **Section 11.1.1 "CCP Modules and Timer Resources"**).

11.2.3 SOFTWARE INTERRUPT

When the Capture mode is changed, a false capture interrupt may be generated. The user should keep the CCPxIE interrupt enable bit clear to avoid false interrupts. The interrupt flag bit, CCPxIF, should also be cleared following any such change in operating mode.

11.2.4 CCP PRESCALER

There are four prescaler settings in Capture mode; they are specified as part of the operating mode selected by the mode select bits (CCPxM<3:0>). Whenever the CCP module is turned off or Capture mode is disabled, the prescaler counter is cleared. This means that any Reset will clear the prescaler counter.

Switching from one capture prescaler to another may generate an interrupt. Also, the prescaler counter will not be cleared; therefore, the first capture may be from a non-zero prescaler. Example 11-1 shows the recommended method for switching between capture prescalers. This example also clears the prescaler counter and will not generate the "false" interrupt.

EXAMPLE 11-1: CHANGING BETWEEN CAPTURE PRESCALERS (CCP2 SHOWN)

```
CLRF   CCP2CON     ; Turn CCP module off
MOVLW  NEW_CAPT_PS ; Load WREG with the
                   ; new prescaler mode
                   ; value and CCP ON
MOVWF  CCP2CON     ; Load CCP2CON with
                   ; this value
```

FIGURE 11-1: CAPTURE MODE OPERATION BLOCK DIAGRAM

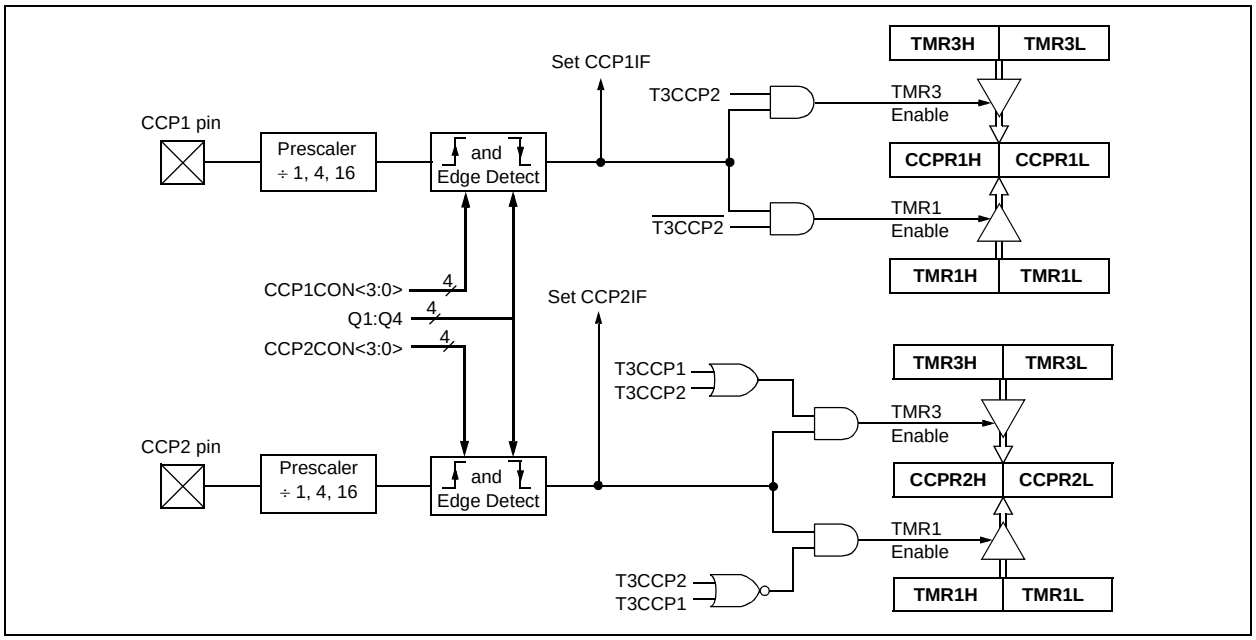

© 2010 Microchip Technology Inc.

11.3 Compare Mode

In Compare mode, the 16-bit CCPRx register value is constantly compared against either the TMR1 or TMR3 register pair value. When a match occurs, the CCPx pin can be:

- driven high
- driven low
- toggled (high-to-low or low-to-high)
- remain unchanged (that is, reflects the state of the I/O latch)

The action on the pin is based on the value of the mode select bits (CCPxM<3:0>). At the same time, the interrupt flag bit, CCPxIF, is set.

11.3.1 CCP PIN CONFIGURATION

The user must configure the CCPx pin as an output by clearing the appropriate TRIS bit.

Note:	Clearing the CCPxCON register will force the CCPx compare output latch (depending on device configuration) to the default low level. This is not the PORTB or PORTC I/O data latch.

11.3.2 TIMER1/TIMER3 MODE SELECTION

Timer1 and/or Timer3 must be running in Timer mode or Synchronized Counter mode if the CCP module is using the compare feature. In Asynchronous Counter mode, the compare operation will not work reliably.

11.3.3 SOFTWARE INTERRUPT MODE

When the Generate Software Interrupt mode is chosen (CCPxM<3:0> = 1010), the corresponding CCPx pin is not affected. Only the CCPxIF interrupt flag is affected.

11.3.4 SPECIAL EVENT TRIGGER

Both CCP modules are equipped with a Special Event Trigger. This is an internal hardware signal generated in Compare mode to trigger actions by other modules. The Special Event Trigger is enabled by selecting the Compare Special Event Trigger mode (CCPxM<3:0> = 1011).

For either CCP module, the Special Event Trigger resets the timer register pair for whichever timer resource is currently assigned as the module's time base. This allows the CCPRx registers to serve as a programmable period register for either timer.

The Special Event Trigger for CCP2 can also start an A/D conversion. In order to do this, the A/D converter must already be enabled.

FIGURE 11-2: COMPARE MODE OPERATION BLOCK DIAGRAM

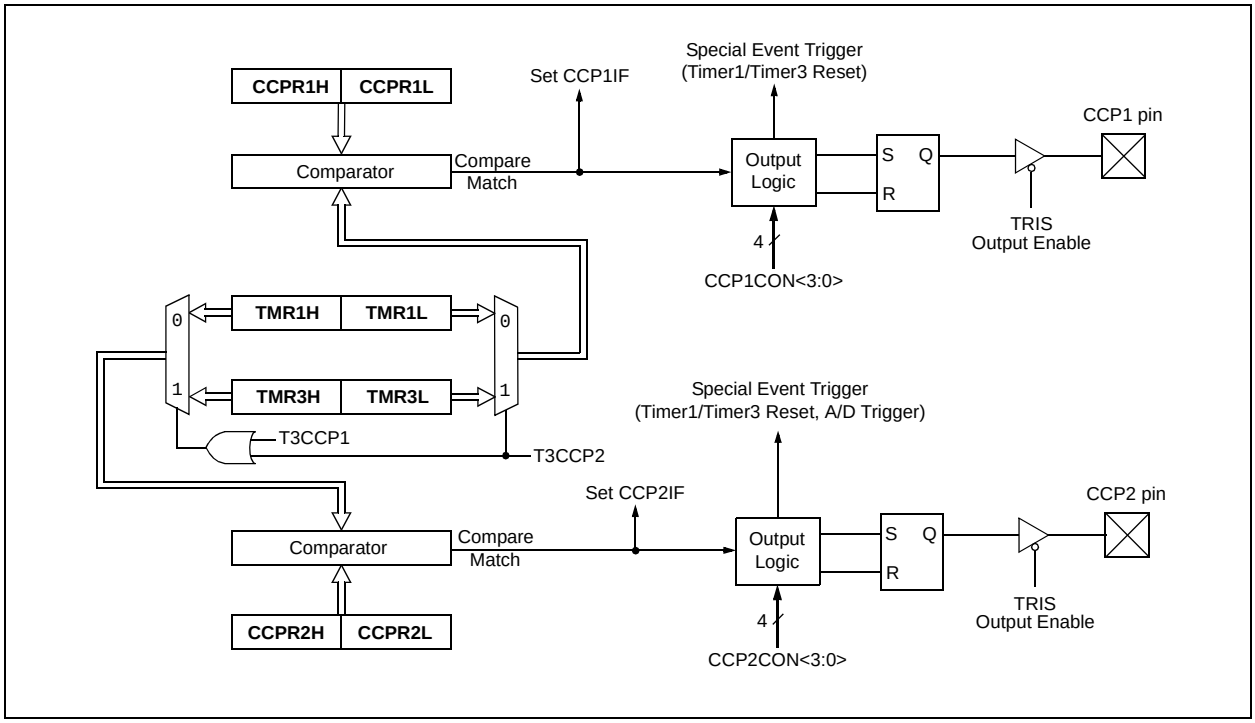

TABLE 11-3: REGISTERS ASSOCIATED WITH CAPTURE, COMPARE, TIMER1 AND TIMER3

Name	Bit 7	Bit 6	Bit 5	Bit 4	Bit 3	Bit 2	Bit 1	Bit 0	Reset Values on page
INTCON	GIE/GIEH	PEIE/GIEL	TMR0IE	INT0IE	RBIE	TMR0IF	INT0IF	RBIF	59
RCON	IPEN	SBOREN	—	$\overline{RI}$	$\overline{TO}$	$\overline{PD}$	$\overline{POR}$	$\overline{BOR}$	58
PIR1	PSPIF(1)	ADIF	RCIF	TXIF	SSPIF	CCP1IF	TMR2IF	TMR1IF	62
PIE1	PSPIE(1)	ADIE	RCIE	TXIE	SSPIE	CCP1IE	TMR2IE	TMR1IE	62
IPR1	PSPIP(1)	ADIP	RCIP	TXIP	SSPIP	CCP1IP	TMR2IP	TMR1IP	62
PIR2	OSCFIF	C1IF	C2IF	EEIF	BCLIF	HLVDIF	TMR3IF	CCP2IF	62
PIE2	OSCFIE	C1IE	C2IE	EEIE	BCLIE	HLVDIE	TMR3IE	CCP2IE	62
IPR2	OSCFIP	C1IP	C2IP	EEIP	BCLIP	HLVDIP	TMR3IP	CCP2IP	62
TRISB	PORTB Data Direction Control Register								62
TRISC	PORTC Data Direction Control Register								62
TMR1L	Timer1 Register, Low Byte								60
TMR1H	Timer1 Register, High Byte								60
T1CON	RD16	T1RUN	T1CKPS1	T1CKPS0	T1OSCEN	$\overline{T1SYNC}$	TMR1CS	TMR1ON	60
TMR3H	Timer3 Register, High Byte								61
TMR3L	Timer3 Register, Low Byte								61
T3CON	RD16	T3CCP2	T3CKPS1	T3CKPS0	T3CCP1	$\overline{T3SYNC}$	TMR3CS	TMR3ON	61
CCPR1L	Capture/Compare/PWM Register 1, Low Byte								61
CCPR1H	Capture/Compare/PWM Register 1, High Byte								61
CCP1CON	P1M1	P1M0	DC1B1	DC1B0	CCP1M3	CCP1M2	CCP1M1	CCP1M0	61
CCPR2L	Capture/Compare/PWM Register 2, Low Byte								61
CCPR2H	Capture/Compare/PWM Register 2, High Byte								61
CCP2CON	—	—	DC2B1	DC2B0	CCP2M3	CCP2M2	CCP2M1	CCP2M0	61

Legend: — = unimplemented, read as '0'. Shaded cells are not used by Capture/Compare, Timer1 or Timer3.

Note 1: Not impemented on PIC18F2XK20 devices.

© 2010 Microchip Technology Inc.

11.4 PWM Mode

The PWM mode generates a Pulse-Width Modulated signal on the CCP2 pin for the CCP module and the P1A through P1D pins for the ECCP module. Hereafter the modulated output pin will be referred to as the CCPx pin. The duty cycle, period and resolution are determined by the following registers:

- PR2
- T2CON
- CCPRxL
- CCPxCON

In Pulse-Width Modulation (PWM) mode, the CCP module produces up to a 10-bit resolution PWM output on the CCPx pin. Since the CCPx pin is multiplexed with the PORT data latch, the TRIS for that pin must be cleared to enable the CCPx pin output driver.

Note:	Clearing the CCPxCON register will relinquish CCPx control of the CCPx pin.

Figure 11.1.1 shows a simplified block diagram of PWM operation.

Figure 11-4 shows a typical waveform of the PWM signal.

For a step-by-step procedure on how to set up the CCP module for PWM operation, see **Section 11.4.7 "Setup for PWM Operation"**.

FIGURE 11-3: SIMPLIFIED PWM BLOCK DIAGRAM

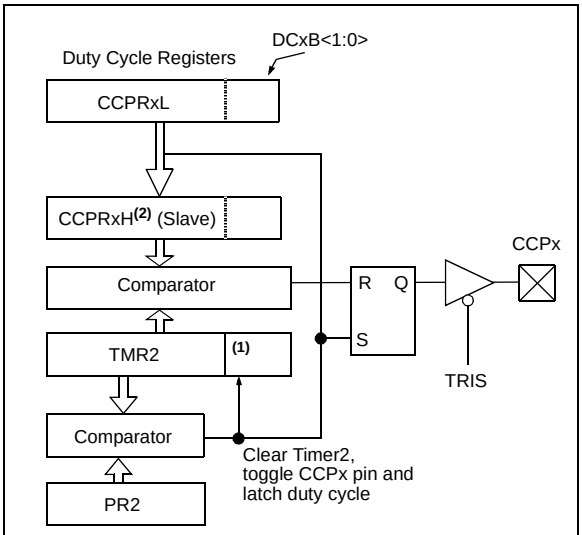

Note 1: The 8-bit timer TMR2 register is concatenated with the 2-bit internal system clock (FOSC), or 2 bits of the prescaler, to create the 10-bit time base.

2: In PWM mode, CCPRxH is a read-only register.

The PWM output (Figure 11-4) has a time base (period) and a time that the output stays high (duty cycle).

FIGURE 11-4: CCP PWM OUTPUT

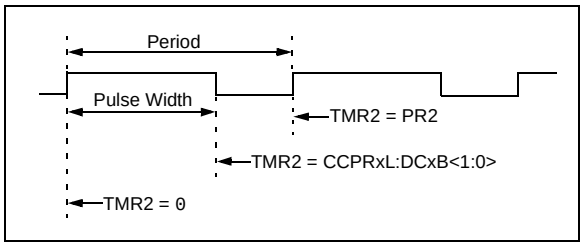

11.4.1 PWM PERIOD

The PWM period is specified by the PR2 register of Timer2. The PWM period can be calculated using the formula of Equation 11-1.

EQUATION 11-1: PWM PERIOD

$$PWM\ Period = [(PR2) + 1] \bullet 4 \bullet T_{OSC} \bullet (TMR2\ Prescale\ Value)$$

Note: Tosc = 1/Fosc.

When TMR2 is equal to PR2, the following three events occur on the next increment cycle:

- TMR2 is cleared
- The CCPx pin is set. (Exception: If the PWM duty cycle = 0%, the pin will not be set.)
- The PWM duty cycle is latched from CCPRxL into CCPRxH.

Note:	The Timer2 postscaler (see **Section 14.1 "Timer2 Operation"**) is not used in the determination of the PWM frequency.

11.4.2 PWM DUTY CYCLE

The PWM duty cycle is specified by writing a 10-bit value to multiple registers: CCPRxL register and DCxB<1:0> bits of the CCPxCON register. The CCPRxL contains the eight MSbs and the DCxB<1:0> bits of the CCPxCON register contain the two LSbs. CCPRxL and DCxB<1:0> bits of the CCPxCON register can be written to at any time. The duty cycle value is not latched into CCPRxH until after the period completes (i.e., a match between PR2 and TMR2 registers occurs). While using the PWM, the CCPRxH register is read-only.

Equation 11-2 is used to calculate the PWM pulse width.

Equation 11-3 is used to calculate the PWM duty cycle ratio.

EQUATION 11-2: PULSE WIDTH

$$Pulse\ Width = (CCPRxL{:}DCxB{<}1{:}0{>}) \bullet T_{OSC} \bullet (TMR2\ Prescale\ Value)$$

EQUATION 11-3: DUTY CYCLE RATIO

$$Duty\ Cycle\ Ratio = \frac{(CCPRxL{:}DCxB{<}1{:}0{>})}{4(PR2 + 1)}$$

The CCPRxH register and a 2-bit internal latch are used to double buffer the PWM duty cycle. This double buffering is essential for glitchless PWM operation.

The 8-bit timer TMR2 register is concatenated with either the 2-bit internal system clock (FOSC), or 2 bits of the prescaler, to create the 10-bit time base. The system clock is used if the Timer2 prescaler is set to 1:1.

When the 10-bit time base matches the CCPRxH and 2-bit latch, then the CCPx pin is cleared (see Figure 11-3).

© 2010 Microchip Technology Inc.

11.4.3 PWM RESOLUTION

The resolution determines the number of available duty cycles for a given period. For example, a 10-bit resolution will result in 1024 discrete duty cycles, whereas an 8-bit resolution will result in 256 discrete duty cycles.

The maximum PWM resolution is 10 bits when PR2 is 255. The resolution is a function of the PR2 register value as shown by Equation 11-4.

EQUATION 11-4: PWM RESOLUTION

$$Resolution = \frac{log[4(PR2 + 1)]}{log(2)} \ bits$$

Note: If the pulse width value is greater than the period the assigned PWM pin(s) will remain unchanged.

TABLE 11-4: EXAMPLE PWM FREQUENCIES AND RESOLUTIONS AT 40 MHz

PWM Frequency	2.44 kHz	9.77 kHz	39.06 kHz	156.25 kHz	312.50 kHz	416.67 kHz
Timer Prescaler (1, 4, 16)	16	4	1	1	1	1
PR2 Value	FFh	FFh	FFh	3Fh	1Fh	17h
Maximum Resolution (bits)	10	10	10	8	7	6.58

TABLE 11-5: EXAMPLE PWM FREQUENCIES AND RESOLUTIONS (FOSC = 20 MHz)

PWM Frequency	1.22 kHz	4.88 kHz	19.53 kHz	78.12 kHz	156.3 kHz	208.3 kHz
Timer Prescale (1, 4, 16)	16	4	1	1	1	1
PR2 Value	0xFF	0xFF	0xFF	0x3F	0x1F	0x17
Maximum Resolution (bits)	10	10	10	8	7	6.6

TABLE 11-6: EXAMPLE PWM FREQUENCIES AND RESOLUTIONS (FOSC = 8 MHz)

PWM Frequency	1.22 kHz	4.90 kHz	19.61 kHz	76.92 kHz	153.85 kHz	200.0 kHz
Timer Prescale (1, 4, 16)	16	4	1	1	1	1
PR2 Value	0x65	0x65	0x65	0x19	0x0C	0x09
Maximum Resolution (bits)	8	8	8	6	5	5

11.4.4 OPERATION IN POWER-MANAGED MODES

In Sleep mode, the TMR2 register will not increment and the state of the module will not change. If the CCPx pin is driving a value, it will continue to drive that value. When the device wakes up, TMR2 will continue from its previous state.

In PRI_IDLE mode, the primary clock will continue to clock the CCP module without change. In all other power-managed modes, the selected power-managed mode clock will clock Timer2. Other power-managed mode clocks will most likely be different than the primary clock frequency.

11.4.5 CHANGES IN SYSTEM CLOCK FREQUENCY

The PWM frequency is derived from the system clock frequency. Any changes in the system clock frequency will result in changes to the PWM frequency. See **Section 2.0 "Oscillator Module (With Fail-Safe Clock Monitor)"** for additional details.

11.4.6 EFFECTS OF RESET

Any Reset will force all ports to Input mode and the CCP registers to their Reset states.

11.4.7 SETUP FOR PWM OPERATION

The following steps should be taken when configuring the CCP module for PWM operation:

1. Disable the PWM pin (CCPx) output drivers by setting the associated TRIS bit.
2. For the ECCP module only: Select the desired PWM outputs (P1A through P1D) by setting the appropriate steering bits of the PSTRCON register.
3. Set the PWM period by loading the PR2 register.
4. Configure the CCP module for the PWM mode by loading the CCPxCON register with the appropriate values.
5. Set the PWM duty cycle by loading the CCPRxL register and CCPx bits of the CCPxCON register.
6. Configure and start Timer2:
   - Clear the TMR2IF interrupt flag bit of the PIR1 register.
   - Set the Timer2 prescale value by loading the T2CKPS bits of the T2CON register.
   - Enable Timer2 by setting the TMR2ON bit of the T2CON register.
7. Enable PWM output after a new PWM cycle has started:
   - Wait until Timer2 overflows (TMR2IF bit of the PIR1 register is set).
   - Enable the CCPx pin output driver by clearing the associated TRIS bit.

© 2010 Microchip Technology Inc.

TABLE 11-7: REGISTERS ASSOCIATED WITH PWM AND TIMER2

Name	Bit 7	Bit 6	Bit 5	Bit 4	Bit 3	Bit 2	Bit 1	Bit 0	Reset Values on page
INTCON	GIE/GIEH	PEIE/GIEL	TMR0IE	INT0IE	RBIE	TMR0IF	INT0IF	RBIF	59
RCON	IPEN	SBOREN	—	$\overline{RI}$	$\overline{TO}$	$\overline{PD}$	$\overline{POR}$	$\overline{BOR}$	58
PIR1	PSPIF(1)	ADIF	RCIF	TXIF	SSPIF	CCP1IF	TMR2IF	TMR1IF	62
PIE1	PSPIE(1)	ADIE	RCIE	TXIE	SSPIE	CCP1IE	TMR2IE	TMR1IE	62
IPR1	PSPIP(1)	ADIP	RCIP	TXIP	SSPIP	CCP1IP	TMR2IP	TMR1IP	62
TRISB	PORTB Data Direction Control Register								62
TRISC	PORTC Data Direction Control Register								62
TMR2	Timer2 Register								60
PR2	Timer2 Period Register								60
T2CON	—	T2OUTPS3	T2OUTPS2	T2OUTPS1	T2OUTPS0	TMR2ON	T2CKPS1	T2CKPS0	60
CCPR1L	Capture/Compare/PWM Register 1, Low Byte								61
CCPR1H	Capture/Compare/PWM Register 1, High Byte								61
CCP1CON	P1M1	P1M0	DC1B1	DC1B0	CCP1M3	CCP1M2	CCP1M1	CCP1M0	61
CCPR2L	Capture/Compare/PWM Register 2, Low Byte								61
CCPR2H	Capture/Compare/PWM Register 2, High Byte								61
CCP2CON	—	—	DC2B1	DC2B0	CCP2M3	CCP2M2	CCP2M1	CCP2M0	61
ECCP1AS	ECCPASE	ECCPAS2	ECCPAS1	ECCPAS0	PSSAC1	PSSAC0	PSSBD1	PSSBD0	61
PWM1CON	PRSEN	PDC6	PDC5	PDC4	PDC3	PDC2	PDC	PDC0	61

Legend: — = unimplemented, read as '0'. Shaded cells are not used by PWM or Timer2.

Note 1: Not implemented on PIC18F2XK20 devices.

NOTES:

© 2010 Microchip Technology Inc.

12.0 TIMER0 MODULE

The Timer0 module incorporates the following features:

- Software selectable operation as a timer or counter in both 8-bit or 16-bit modes
- Readable and writable registers
- Dedicated 8-bit, software programmable prescaler
- Selectable clock source (internal or external)
- Edge select for external clock
- Interrupt-on-overflow

The T0CON register (Register 12-1) controls all aspects of the module's operation, including the prescale selection. It is both readable and writable.

A simplified block diagram of the Timer0 module in 8-bit mode is shown in Figure 12-1. Figure 12-2 shows a simplified block diagram of the Timer0 module in 16-bit mode.

REGISTER 12-1: T0CON: TIMER0 CONTROL REGISTER

R/W-1	R/W-1	R/W-1	R/W-1	R/W-1	R/W-1	R/W-1	R/W-1
TMR0ON	T08BIT	T0CS	T0SE	PSA	T0PS2	T0PS1	T0PS0
bit 7							bit 0

Legend:			
R = Readable bit	W = Writable bit	U = Unimplemented bit, read as '0'	
-n = Value at POR	'1' = Bit is set	'0' = Bit is cleared	x = Bit is unknown

bit 7 **TMR0ON:** Timer0 On/Off Control bit
1 = Enables Timer0
0 = Stops Timer0

bit 6 **T08BIT**: Timer0 8-bit/16-bit Control bit
1 = Timer0 is configured as an 8-bit timer/counter
0 = Timer0 is configured as a 16-bit timer/counter

bit 5 **T0CS**: Timer0 Clock Source Select bit
1 = Transition on T0CKI pin
0 = Internal instruction cycle clock (CLKOUT)

bit 4 **T0SE**: Timer0 Source Edge Select bit
1 = Increment on high-to-low transition on T0CKI pin
0 = Increment on low-to-high transition on T0CKI pin

bit 3 **PSA**: Timer0 Prescaler Assignment bit
1 = TImer0 prescaler is NOT assigned. Timer0 clock input bypasses prescaler.
0 = Timer0 prescaler is assigned. Timer0 clock input comes from prescaler output.

bit 2-0 **T0PS<2:0>**: Timer0 Prescaler Select bits
111 = 1:256 prescale value
110 = 1:128 prescale value
101 = 1:64 prescale value
100 = 1:32 prescale value
011 = 1:16 prescale value
010 = 1:8 prescale value
001 = 1:4 prescale value
000 = 1:2 prescale value

12.1 Timer0 Operation

Timer0 can operate as either a timer or a counter; the mode is selected with the T0CS bit of the T0CON register. In Timer mode (T0CS = 0), the module increments on every clock by default unless a different prescaler value is selected (see **Section 12.3 "Prescaler"**). Timer0 incrementing is inhibited for two instruction cycles following a TMR0 register write. The user can work around this by adjusting the value written to the TMR0 register to compensate for the anticipated missing increments.

The Counter mode is selected by setting the T0CS bit (= 1). In this mode, Timer0 increments either on every rising or falling edge of pin RA4/T0CKI. The incrementing edge is determined by the Timer0 Source Edge Select bit, T0SE of the T0CON register; clearing this bit selects the rising edge. Restrictions on the external clock input are discussed below.

An external clock source can be used to drive Timer0; however, it must meet certain requirements (see Table 26-11) to ensure that the external clock can be synchronized with the internal phase clock (TOSC). There is a delay between synchronization and the onset of incrementing the timer/counter.

12.2 Timer0 Reads and Writes in 16-Bit Mode

TMR0H is not the actual high byte of Timer0 in 16-bit mode; it is actually a buffered version of the real high byte of Timer0 which is neither directly readable nor writable (refer to Figure 12-2). TMR0H is updated with the contents of the high byte of Timer0 during a read of TMR0L. This provides the ability to read all 16 bits of Timer0 without the need to verify that the read of the high and low byte were valid. Invalid reads could otherwise occur due to a rollover between successive reads of the high and low byte.

Similarly, a write to the high byte of Timer0 must also take place through the TMR0H Buffer register. Writing to TMR0H does not directly affect Timer0. Instead, the high byte of Timer0 is updated with the contents of TMR0H when a write occurs to TMR0L. This allows all 16 bits of Timer0 to be updated at once.

FIGURE 12-1: TIMER0 BLOCK DIAGRAM (8-BIT MODE)

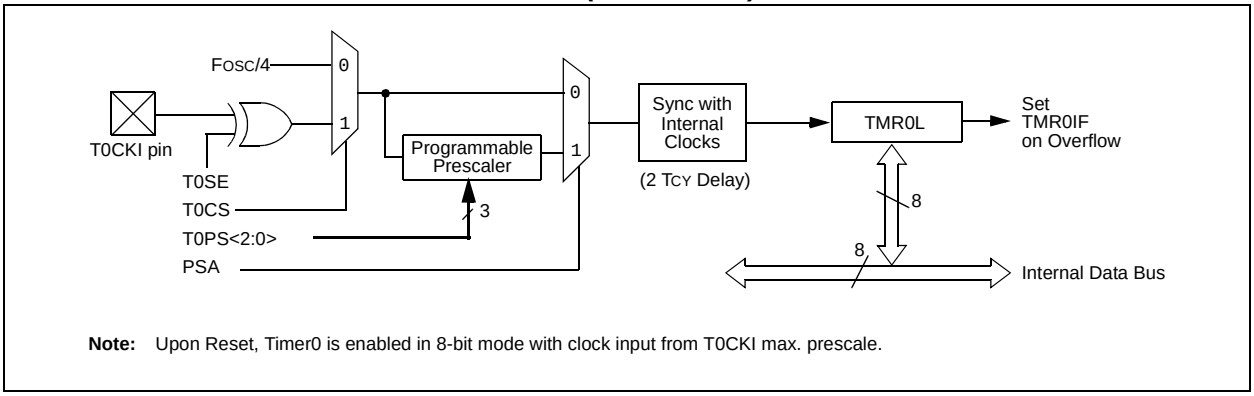

Note: Upon Reset, Timer0 is enabled in 8-bit mode with clock input from T0CKI max. prescale.

© 2010 Microchip Technology Inc.

FIGURE 12-2: TIMER0 BLOCK DIAGRAM (16-BIT MODE)

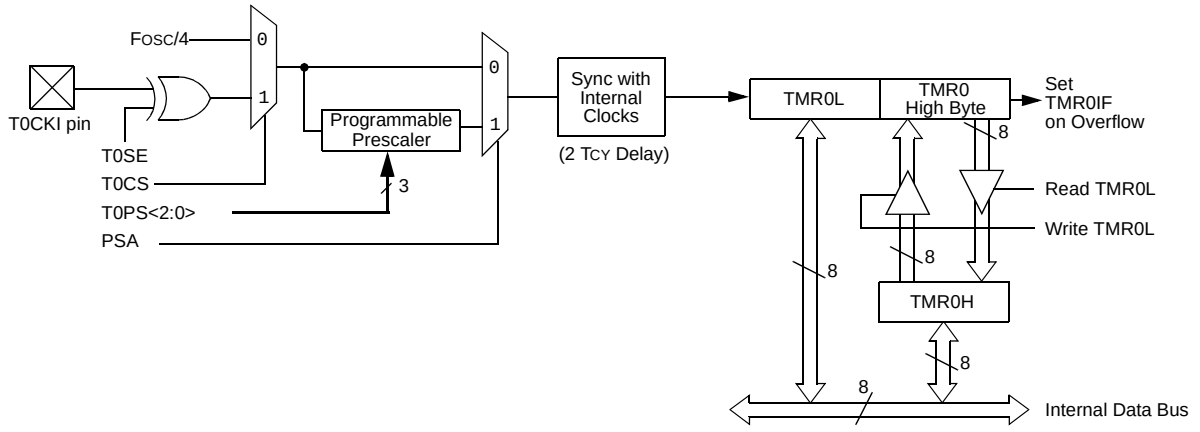

Note: Upon Reset, Timer0 is enabled in 8-bit mode with clock input from T0CKI max. prescale.

12.3 Prescaler

An 8-bit counter is available as a prescaler for the Timer0 module. The prescaler is not directly readable or writable; its value is set by the PSA and T0PS<2:0> bits of the T0CON register which determine the prescaler assignment and prescale ratio.

Clearing the PSA bit assigns the prescaler to the Timer0 module. When the prescaler is assigned, prescale values from 1:2 through 1:256 in integer power-of-2 increments are selectable.

When assigned to the Timer0 module, all instructions writing to the TMR0 register (e.g., `CLRF TMR0`, `MOVWF TMR0`, `BSF TMR0`, etc.) clear the prescaler count.

Note:	Writing to TMR0 when the prescaler is assigned to Timer0 will clear the prescaler count but will not change the prescaler assignment.

12.3.1 SWITCHING PRESCALER ASSIGNMENT

The prescaler assignment is fully under software control and can be changed “on-the-fly” during program execution.

12.4 Timer0 Interrupt

The TMR0 interrupt is generated when the TMR0 register overflows from FFh to 00h in 8-bit mode, or from FFFFh to 0000h in 16-bit mode. This overflow sets the TMR0IF flag bit. The interrupt can be masked by clearing the TMR0IE bit of the INTCON register. Before re-enabling the interrupt, the TMR0IF bit must be cleared by software in the Interrupt Service Routine.

Since Timer0 is shut down in Sleep mode, the TMR0 interrupt cannot awaken the processor from Sleep.

TABLE 12-1: REGISTERS ASSOCIATED WITH TIMER0

Name	Bit 7	Bit 6	Bit 5	Bit 4	Bit 3	Bit 2	Bit 1	Bit 0	Reset Values on page
TMR0L	Timer0 Register, Low Byte								60
TMR0H	Timer0 Register, High Byte								60
INTCON	GIE/GIEH	PEIE/GIEL	TMR0IE	INT0IE	RBIE	TMR0IF	INT0IF	RBIF	59
T0CON	TMR0ON	T08BIT	T0CS	T0SE	PSA	T0PS2	T0PS1	T0PS0	60
TRISA	RA7(1)	RA6(1)	RA5	RA4	RA3	RA2	RA1	RA0	62

Legend: Shaded cells are not used by Timer0.

Note 1: PORTA<7:6> and their direction bits are individually configured as port pins based on various primary oscillator modes. When disabled, these bits read as ‘0’.

NOTES:

© 2010 Microchip Technology Inc.

13.0 TIMER1 MODULE

The Timer1 timer/counter module incorporates the following features:

- Software selectable operation as a 16-bit timer or counter
- Readable and writable 8-bit registers (TMR1H and TMR1L)
- Selectable internal or external clock source and Timer1 oscillator options
- Interrupt-on-overflow
- Reset on CCP Special Event Trigger
- Device clock status flag (T1RUN)

A simplified block diagram of the Timer1 module is shown in Figure 13-1. A block diagram of the module's operation in Read/Write mode is shown in Figure 13-2.

The module incorporates its own low-power oscillator to provide an additional clocking option. The Timer1 oscillator can also be used as a low-power clock source for the microcontroller in power-managed operation.

Timer1 can also be used to provide Real-Time Clock (RTC) functionality to applications with only a minimal addition of external components and code overhead.

Timer1 is controlled through the T1CON Control register (Register 13-1). It also contains the Timer1 Oscillator Enable bit (T1OSCEN). Timer1 can be enabled or disabled by setting or clearing control bit, TMR1ON of the T1CON register.

REGISTER 13-1: T1CON: TIMER1 CONTROL REGISTER

R/W-0	R-0	R/W-0	R/W-0	R/W-0	R/W-0	R/W-0	R/W-0
RD16	T1RUN	T1CKPS1	T1CKPS0	T1OSCEN	$\overline{\text{T1SYNC}}$	TMR1CS	TMR1ON
bit 7							bit 0

Legend:			
R = Readable bit	W = Writable bit	U = Unimplemented bit, read as '0'	
-n = Value at POR	'1' = Bit is set	'0' = Bit is cleared	x = Bit is unknown

bit 7 **RD16:** 16-bit Read/Write Mode Enable bit
1 = Enables register read/write of TImer1 in one 16-bit operation
0 = Enables register read/write of Timer1 in two 8-bit operations

bit 6 **T1RUN:** Timer1 System Clock Status bit
1 = Main system clock is derived from Timer1 oscillator
0 = Main system clock is derived from another source

bit 5-4 **T1CKPS<1:0>:** Timer1 Input Clock Prescale Select bits
11 = 1:8 Prescale value
10 = 1:4 Prescale value
01 = 1:2 Prescale value
00 = 1:1 Prescale value

bit 3 **T1OSCEN:** Timer1 Oscillator Enable bit
1 = Timer1 oscillator is enabled
0 = Timer1 oscillator is shut off
The oscillator inverter and feedback resistor are turned off to eliminate power drain.

bit 2 **$\overline{\text{T1SYNC}}$:** Timer1 External Clock Input Synchronization Select bit
When TMR1CS = 1:
1 = Do not synchronize external clock input
0 = Synchronize external clock input
When TMR1CS = 0:
This bit is ignored. Timer1 uses the internal clock when TMR1CS = 0.

bit 1 **TMR1CS:** Timer1 Clock Source Select bit
1 = External clock from pin RC0/T1OSO/T13CKI (on the rising edge)
0 = Internal clock (FOSC/4)

bit 0 **TMR1ON:** Timer1 On bit
1 = Enables Timer1
0 = Stops Timer1

13.1 Timer1 Operation

Timer1 can operate in one of the following modes:

- Timer
- Synchronous Counter
- Asynchronous Counter

The operating mode is determined by the clock select bit, TMR1CS of the T1CON register. When TMR1CS is cleared (= 0), Timer1 increments on every internal instruction cycle (FOSC/4). When the bit is set, Timer1 increments on every rising edge of either the Timer1 external clock input or the Timer1 oscillator, if enabled.

When the Timer1 oscillator is enabled, the digital circuitry associated with the RC1/T1OSI and RC0/T1OSO/T13CKI pins is disabled. This means the values of TRISC<1:0> are ignored and the pins are read as '0'.

FIGURE 13-1: TIMER1 BLOCK DIAGRAM

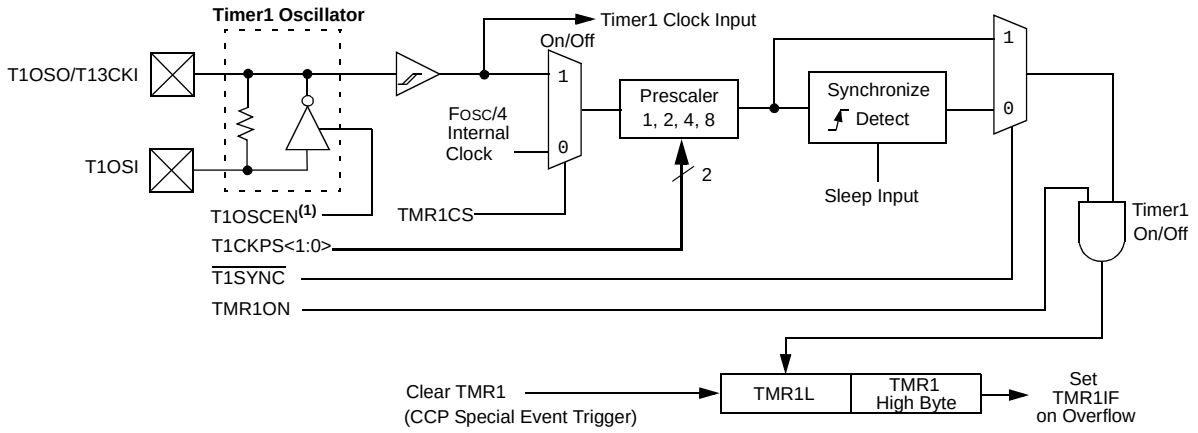

Note 1: When enable bit, T1OSCEN, is cleared, the inverter and feedback resistor are turned off to eliminate power drain.

FIGURE 13-2: TIMER1 BLOCK DIAGRAM (16-BIT READ/WRITE MODE)

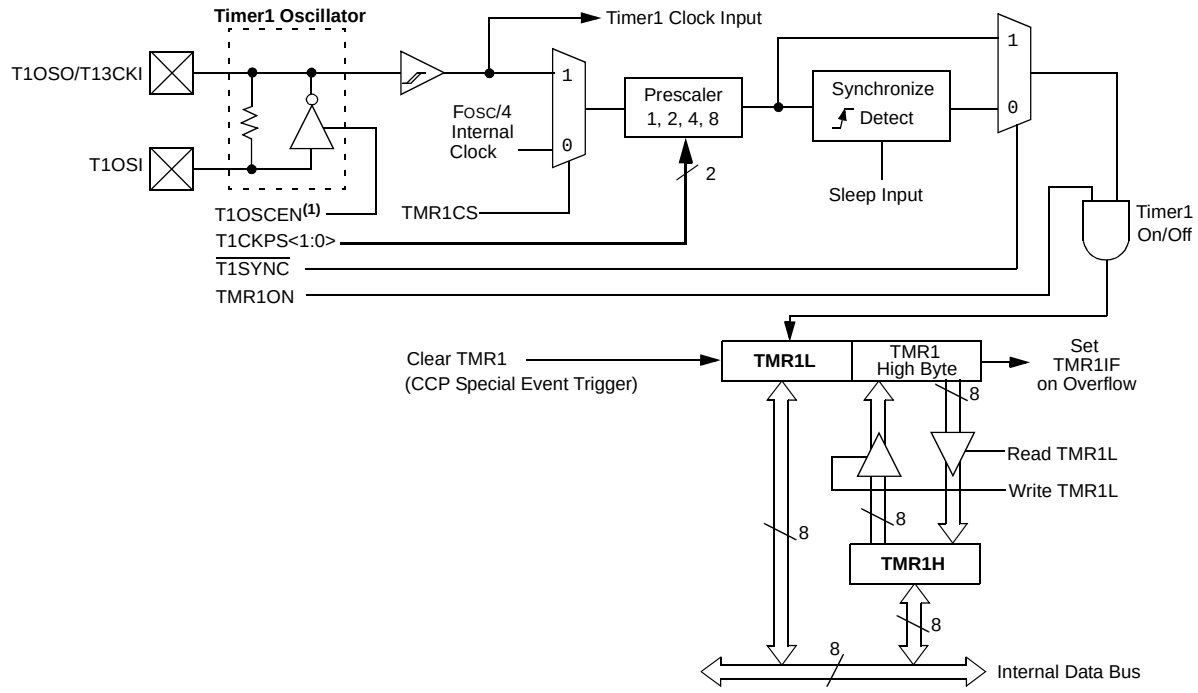

Note 1: When enable bit, T1OSCEN, is cleared, the inverter and feedback resistor are turned off to eliminate power drain.

© 2010 Microchip Technology Inc.

13.2 Clock Source Selection

The TMR1CS bit of the T1CON register is used to select the clock source. When TMR1CS = 0, the clock source is FOSC/4. When TMR1CS = 1, the clock source is supplied externally.

13.2.1 INTERNAL CLOCK SOURCE

When the internal clock source is selected, the TMR1H:TMR1L register pair will increment on multiples of TCY as determined by the Timer1 prescaler.

13.2.2 EXTERNAL CLOCK SOURCE

When the external clock source is selected, the Timer1 module may work as a timer or a counter.

When counting, Timer1 is incremented on the rising edge of the external clock input T1CKI. In addition, the Counter mode clock can be synchronized to the microcontroller system clock or run asynchronously.

If an external clock oscillator is needed (and the microcontroller is using the INTOSC without CLKOUT), Timer1 can use the LP oscillator as a clock source.

Note:	In Counter mode, a falling edge must be registered by the counter prior to the first incrementing rising edge after one or more of the following conditions (see Figure 13-3): • Timer1 is enabled after POR or BOR Reset • A write to TMR1H or TMR1L • Timer1 is disabled (TMR1ON = 0) when T1CKI is high then Timer1 is enabled (TMR1ON = 1) when T1CKI is low.

13.2.3 READING AND WRITING TIMER1 IN ASYNCHRONOUS COUNTER MODE

Reading TMR1H or TMR1L while the timer is running from an external asynchronous clock will ensure a valid read (taken care of in hardware). However, the user should keep in mind that reading the 16-bit timer in two 8-bit values itself, poses certain problems, since the timer may overflow between the reads.

For writes, it is recommended that the user simply stop the timer and write the desired values. A write contention may occur by writing to the timer registers, while the register is incrementing. This may produce an unpredictable value in the TMR1H:TTMR1L register pair.

13.3 Timer1 Prescaler

Timer1 has four prescaler options allowing 1, 2, 4 or 8 divisions of the clock input. The T1CKPS bits of the T1CON register control the prescale counter. The prescale counter is not directly readable or writable; however, the prescaler counter is cleared upon a write to TMR1H or TMR1L.

13.4 Timer1 Operation in Asynchronous Counter Mode

If control bit $\overline{\text{T1SYNC}}$ of the T1CON register is set, the external clock input is not synchronized. The timer continues to increment asynchronous to the internal phase clocks. The timer will continue to run during Sleep and can generate an interrupt on overflow, which will wake-up the processor. However, special precautions in software are needed to read/write the timer (see **Section 13.2.3 "Reading and Writing Timer1 in Asynchronous Counter Mode"**).

Note 1:	When switching from synchronous to asynchronous operation, it is possible to skip an increment. When switching from asynchronous to synchronous operation, it is possible to produce an additional increment.

FIGURE 13-3: TIMER1 INCREMENTING EDGE

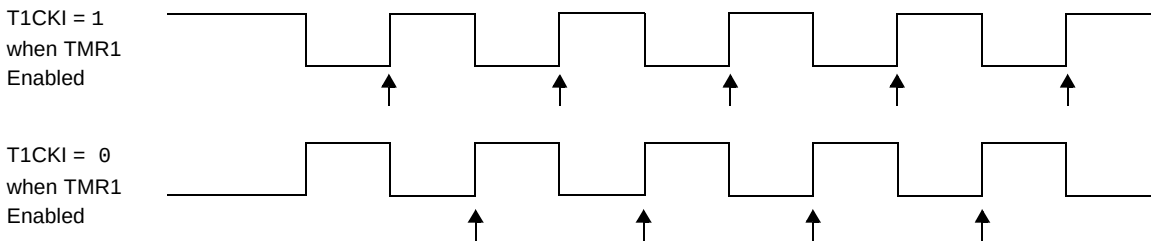

Note 1: Arrows indicate counter increments.

2: In Counter mode, a falling edge must be registered by the counter prior to the first incrementing rising edge of the clock.

13.5 Timer1 16-Bit Read/Write Mode

Timer1 can be configured for 16-bit reads and writes (see Figure 13-2). When the RD16 control bit of the T1CON register is set, the address for TMR1H is mapped to a buffer register for the high byte of Timer1. A read from TMR1L will load the contents of the high byte of Timer1 into the Timer1 high byte buffer. This provides the user with the ability to accurately read all 16 bits of Timer1 without the need to determine whether a read of the high byte, followed by a read of the low byte, has become invalid due to a rollover or carry between reads.

Writing to TMR1H does not directly affect Timer1. Instead, the high byte of Timer1 is updated with the contents of TMR1H when a write occurs to TMR1L. This allows all 16 bits of Timer1 to be updated at once.

The high byte of Timer1 is not directly readable or writable in this mode. All reads and writes must take place through the Timer1 High Byte Buffer register. Writes to TMR1H do not clear the Timer1 prescaler. The prescaler is only cleared on writes to TMR1L.

13.6 Timer1 Oscillator

An on-chip crystal oscillator circuit is incorporated between pins T1OSI (input) and T1OSO (amplifier output). It is enabled by setting the Timer1 Oscillator Enable bit, T1OSCEN of the T1CON register. The oscillator is a low-power circuit rated for 32 kHz crystals. It will continue to run during all power-managed modes. The circuit for a typical LP oscillator is shown in Figure 13-4. Table 13-1 shows the capacitor selection for the Timer1 oscillator.

The user must provide a software time delay to ensure proper start-up of the Timer1 oscillator.

FIGURE 13-4: EXTERNAL COMPONENTS FOR THE TIMER1 LP OSCILLATOR

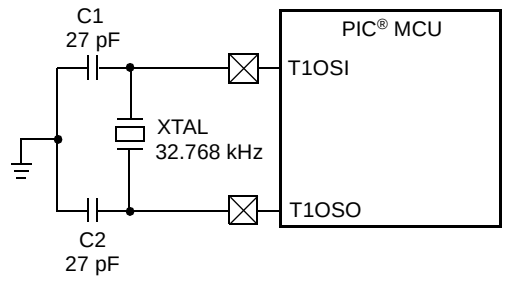

Note: See the Notes with Table 13-1 for additional information about capacitor selection.

TABLE 13-1: CAPACITOR SELECTION FOR THE TIMER OSCILLATOR

Osc Type	Freq	C1	C2
LP	32 kHz	27 pF(1)	27 pF(1)

Note 1: Microchip suggests these values only as a starting point in validating the oscillator circuit.

2: Higher capacitance increases the stability of the oscillator but also increases the start-up time.

3: Since each resonator/crystal has its own characteristics, the user should consult the resonator/crystal manufacturer for appropriate values of external components.

4: Capacitor values are for design guidance only.

13.6.1 USING TIMER1 AS A CLOCK SOURCE

The Timer1 oscillator is also available as a clock source in power-managed modes. By setting the clock select bits, SCS<1:0> of the OSCCON register, to '01', the device switches to SEC_RUN mode; both the CPU and peripherals are clocked from the Timer1 oscillator. If the IDLEN bit of the OSCCON register is cleared and a SLEEP instruction is executed, the device enters SEC_IDLE mode. Additional details are available in **Section 3.0 "Power-Managed Modes"**.

Whenever the Timer1 oscillator is providing the clock source, the Timer1 system clock status flag, T1RUN of the T1CON register, is set. This can be used to determine the controller's current clocking mode. It can also indicate which clock source is currently being used by the Fail-Safe Clock Monitor. If the Clock Monitor is enabled and the Timer1 oscillator fails while providing the clock, polling the T1RUN bit will indicate whether the clock is being provided by the Timer1 oscillator or another source.

© 2010 Microchip Technology Inc.

13.6.2 LOW-POWER TIMER1 OPTION

The Timer1 oscillator can operate at two distinct levels of power consumption based on device configuration. When the LPT1OSC Configuration bit of the CONFIG3H register is set, the Timer1 oscillator operates in a low-power mode. When LPT1OSC is not set, Timer1 operates at a higher power level. Power consumption for a particular mode is relatively constant, regardless of the device's operating mode. The default Timer1 configuration is the higher power mode.

As the low-power Timer1 mode tends to be more sensitive to interference, high noise environments may cause some oscillator instability. The low-power option is, therefore, best suited for low noise applications where power conservation is an important design consideration.

13.6.3 TIMER1 OSCILLATOR LAYOUT CONSIDERATIONS

The Timer1 oscillator circuit draws very little power during operation. Due to the low-power nature of the oscillator, it may also be sensitive to rapidly changing signals in close proximity.

The oscillator circuit, shown in Figure 13-4, should be located as close as possible to the microcontroller. There should be no circuits passing within the oscillator circuit boundaries other than VSS or VDD.

If a high-speed circuit must be located near the oscillator (such as the CCP1 pin in Output Compare or PWM mode, or the primary oscillator using the OSC2 pin), a grounded guard ring around the oscillator circuit, as shown in Figure 13-5, may be helpful when used on a single-sided PCB or in addition to a ground plane.

FIGURE 13-5: OSCILLATOR CIRCUIT WITH GROUNDED GUARD RING

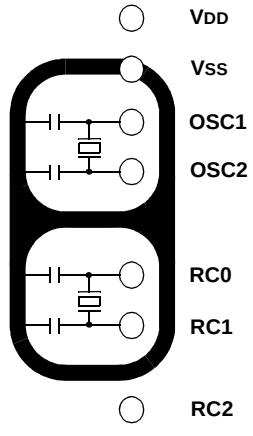

Note: Not drawn to scale.

13.7 Timer1 Interrupt

The TMR1 register pair (TMR1H:TMR1L) increments from 0000h to FFFFh and rolls over to 0000h. The Timer1 interrupt, if enabled, is generated on overflow, which is latched in the TMR1IF interrupt flag bit of the PIR1 register. This interrupt can be enabled or disabled by setting or clearing the TMR1IE Interrupt Enable bit of the PIE1 register.

13.8 Resetting Timer1 Using the CCP Special Event Trigger

If either of the CCP modules is configured to use Timer1 and generate a Special Event Trigger in Compare mode (CCP1M<3:0> or CCP2M<3:0> = 1011), this signal will reset Timer1. The trigger from CCP2 will also start an A/D conversion if the A/D module is enabled (see **Section 11.3.4 "Special Event Trigger"** for more information).

The module must be configured as either a timer or a synchronous counter to take advantage of this feature. When used this way, the CCPRH:CCPRL register pair effectively becomes a period register for Timer1.

If Timer1 is running in Asynchronous Counter mode, this Reset operation may not work.

In the event that a write to Timer1 coincides with a special Event Trigger, the write operation will take precedence.

Note:	The Special Event Triggers from the CCP2 module will not set the TMR1IF interrupt flag bit of the PIR1 register.

13.9 Using Timer1 as a Real-Time Clock

Adding an external LP oscillator to Timer1 (such as the one described in **Section 13.6 "Timer1 Oscillator"** above) gives users the option to include RTC functionality to their applications. This is accomplished with an inexpensive watch crystal to provide an accurate time base and several lines of application code to calculate the time. When operating in Sleep mode and using a battery or supercapacitor as a power source, it can completely eliminate the need for a separate RTC device and battery backup.

The application code routine, RTCisr, shown in Example 13-1, demonstrates a simple method to increment a counter at one-second intervals using an Interrupt Service Routine. Incrementing the TMR1 register pair to overflow triggers the interrupt and calls the routine, which increments the seconds counter by one; additional counters for minutes and hours are incremented on overflows of the less significant counters.

Since the register pair is 16 bits wide, a 32.768 kHz clock source will take 2 seconds to count up to overflow. To force the overflow at the required one-second intervals, it is necessary to preload it; the simplest method is to set the MSb of TMR1H with a BSF instruction. Note that the TMR1L register is never preloaded or altered; doing so may introduce cumulative error over many cycles.

For this method to be accurate, Timer1 must operate in Asynchronous mode and the Timer1 overflow interrupt must be enabled (PIE1<0> = 1), as shown in the routine, RTCinit. The Timer1 oscillator must also be enabled and running at all times.

EXAMPLE 13-1: IMPLEMENTING A REAL-TIME CLOCK USING A TIMER1 INTERRUPT SERVICE

```
RTCinit
            MOVLW    80h              ; Preload TMR1 register pair
            MOVWF    TMR1H            ; for 1 second overflow
            CLRF     TMR1L
            MOVLW    b'00001111'      ; Configure for external clock,
            MOVWF    T1CON            ; Asynchronous operation, external oscillator
            CLRF     secs             ; Initialize timekeeping registers
            CLRF     mins             ;
            MOVLW    .12
            MOVWF    hours
            BSF      PIE1, TMR1IE     ; Enable Timer1 interrupt
            RETURN
RTCisr
            BSF      TMR1H, 7         ; Preload for 1 sec overflow
            BCF      PIR1, TMR1IF     ; Clear interrupt flag
            INCF     secs, F          ; Increment seconds
            MOVLW    .59              ; 60 seconds elapsed?
            CPFSGT   secs
            RETURN                    ; No, done
            CLRF     secs             ; Clear seconds
            INCF     mins, F          ; Increment minutes
            MOVLW    .59              ; 60 minutes elapsed?
            CPFSGT   mins
            RETURN                    ; No, done
            CLRF     mins             ; clear minutes
            INCF     hours, F         ; Increment hours
            MOVLW    .23              ; 24 hours elapsed?
            CPFSGT   hours
            RETURN                    ; No, done
            CLRF     hours            ; Reset hours
            RETURN                    ; Done
```


© 2010 Microchip Technology Inc.

TABLE 13-2: REGISTERS ASSOCIATED WITH TIMER1 AS A TIMER/COUNTER

Name	Bit 7	Bit 6	Bit 5	Bit 4	Bit 3	Bit 2	Bit 1	Bit 0	Reset Values on page
INTCON	GIE/GIEH	PEIE/GIEL	TMR0IE	INT0IE	RBIE	TMR0IF	INT0IF	RBIF	59
PIR1	PSPIF(1)	ADIF	RCIF	TXIF	SSPIF	CCP1IF	TMR2IF	TMR1IF	62
PIE1	PSPIE(1)	ADIE	RCIE	TXIE	SSPIE	CCP1IE	TMR2IE	TMR1IE	62
IPR1	PSPIP(1)	ADIP	RCIP	TXIP	SSPIP	CCP1IP	TMR2IP	TMR1IP	62
TMR1L	Timer1 Register, Low Byte								60
TMR1H	Timer1 Register, High Byte								60
T1CON	RD16	T1RUN	T1CKPS1	T1CKPS0	T1OSCEN	$\overline{\text{T1SYNC}}$	TMR1CS	TMR1ON	60

Legend: Shaded cells are not used by the Timer1 module.

Note 1: These bits are unimplemented on 28-pin devices; always maintain these bits clear.

NOTES:

© 2010 Microchip Technology Inc.

14.0 TIMER2 MODULE

The Timer2 module timer incorporates the following features:

- 8-bit timer and period registers (TMR2 and PR2, respectively)
- Readable and writable (both registers)
- Software programmable prescaler (1:1, 1:4 and 1:16)
- Software programmable postscaler (1:1 through 1:16)
- Interrupt on TMR2-to-PR2 match
- Optional use as the shift clock for the MSSP module

The module is controlled through the T2CON register (Register 14-1), which enables or disables the timer and configures the prescaler and postscaler. Timer2 can be shut off by clearing control bit, TMR2ON of the T2CON register, to minimize power consumption.

A simplified block diagram of the module is shown in Figure 14-1.

14.1 Timer2 Operation

In normal operation, TMR2 is incremented from 00h on each clock (FOSC/4). A 4-bit counter/prescaler on the clock input gives direct input, divide-by-4 and divide-by-16 prescale options; these are selected by the prescaler control bits, T2CKPS<1:0> of the T2CON register. The value of TMR2 is compared to that of the period register, PR2, on each clock cycle. When the two values match, the comparator generates a match signal as the timer output. This signal also resets the value of TMR2 to 00h on the next cycle and drives the output counter/postscaler (see **Section 14.2 "Timer2 Interrupt"**).

The TMR2 and PR2 registers are both directly readable and writable. The TMR2 register is cleared on any device Reset, whereas the PR2 register initializes to FFh. Both the prescaler and postscaler counters are cleared on the following events:

- a write to the TMR2 register
- a write to the T2CON register
- any device Reset (Power-on Reset, $\overline{\text{MCLR}}$ Reset, Watchdog Timer Reset or Brown-out Reset)

TMR2 is not cleared when T2CON is written.

REGISTER 14-1: T2CON: TIMER2 CONTROL REGISTER

U-0	R/W-0	R/W-0	R/W-0	R/W-0	R/W-0	R/W-0	R/W-0
—	T2OUTPS3	T2OUTPS2	T2OUTPS1	T2OUTPS0	TMR2ON	T2CKPS1	T2CKPS0
bit 7							bit 0

Legend:			
R = Readable bit	W = Writable bit	U = Unimplemented bit, read as '0'	
-n = Value at POR	'1' = Bit is set	'0' = Bit is cleared	x = Bit is unknown

bit 7 **Unimplemented:** Read as '0'

bit 6-3 **T2OUTPS<3:0>**: Timer2 Output Postscale Select bits
0000 = 1:1 Postscale
0001 = 1:2 Postscale
•
•
•
1111 = 1:16 Postscale

bit 2 **TMR2ON**: Timer2 On bit
1 = Timer2 is on
0 = Timer2 is off

bit 1-0 **T2CKPS<1:0>**: Timer2 Clock Prescale Select bits
00 = Prescaler is 1
01 = Prescaler is 4
1x = Prescaler is 16

14.2 Timer2 Interrupt

Timer2 can also generate an optional device interrupt. The Timer2 output signal (TMR2-to-PR2 match) provides the input for the 4-bit output counter/postscaler. This counter generates the TMR2 match interrupt flag which is latched in TMR2IF of the PIR1 register. The interrupt is enabled by setting the TMR2 Match Interrupt Enable bit, TMR2IE of the PIE1 register.

A range of 16 postscale options (from 1:1 through 1:16 inclusive) can be selected with the postscaler control bits, T2OUTPS<3:0> of the T2CON register.

14.3 Timer2 Output

The unscaled output of TMR2 is available primarily to the CCP modules, where it is used as a time base for operations in PWM mode.

Timer2 can be optionally used as the shift clock source for the MSSP module operating in SPI mode. Additional information is provided in **Section 17.0 "Master Synchronous Serial Port (MSSP) Module"**.

FIGURE 14-1: TIMER2 BLOCK DIAGRAM

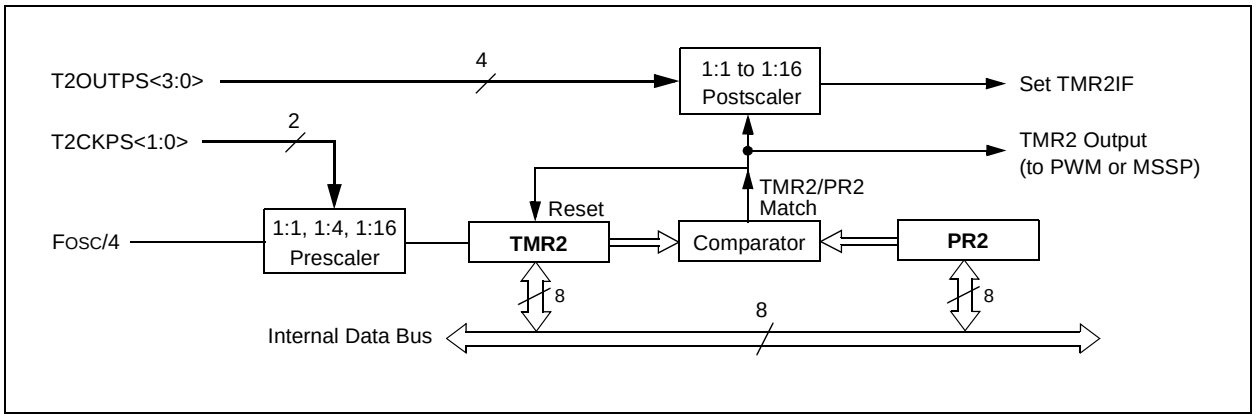

TABLE 14-1: REGISTERS ASSOCIATED WITH TIMER2 AS A TIMER/COUNTER

Name	Bit 7	Bit 6	Bit 5	Bit 4	Bit 3	Bit 2	Bit 1	Bit 0	Reset Values on page
INTCON	GIE/GIEH	PEIE/GIEL	TMR0IE	INT0IE	RBIE	TMR0IF	INT0IF	RBIF	59
PIR1	PSPIF(1)	ADIF	RCIF	TXIF	SSPIF	CCP1IF	TMR2IF	TMR1IF	62
PIE1	PSPIE(1)	ADIE	RCIE	TXIE	SSPIE	CCP1IE	TMR2IE	TMR1IE	62
IPR1	PSPIP(1)	ADIP	RCIP	TXIP	SSPIP	CCP1IP	TMR2IP	TMR1IP	62
TMR2	Timer2 Register								60
T2CON	—	T2OUTPS3	T2OUTPS2	T2OUTPS1	T2OUTPS0	TMR2ON	T2CKPS1	T2CKPS0	60
PR2	Timer2 Period Register								60

Legend: — = unimplemented, read as '0'. Shaded cells are not used by the Timer2 module.

Note 1: These bits are unimplemented on 28-pin devices; always maintain these bits clear.

© 2010 Microchip Technology Inc.

15.0 TIMER3 MODULE

The Timer3 module timer/counter incorporates these features:

- Software selectable operation as a 16-bit timer or counter
- Readable and writable 8-bit registers (TMR3H and TMR3L)
- Selectable clock source (internal or external) with device clock or Timer1 oscillator internal options
- Interrupt-on-overflow
- Module Reset on CCP Special Event Trigger

A simplified block diagram of the Timer3 module is shown in Figure 15-1. A block diagram of the module's operation in Read/Write mode is shown in Figure 15-2.

The Timer3 module is controlled through the T3CON register (Register 15-1). It also selects the clock source options for the CCP modules (see **Section 11.1.1 "CCP Modules and Timer Resources"** for more information).

REGISTER 15-1: T3CON: TIMER3 CONTROL REGISTER

R/W-0	R/W-0	R/W-0	R/W-0	R/W-0	R/W-0	R/W-0	R/W-0
RD16	T3CCP2	T3CKPS1	T3CKPS0	T3CCP1	$\overline{\text{T3SYNC}}$	TMR3CS	TMR3ON
bit 7							bit 0

Legend:			
R = Readable bit	W = Writable bit	U = Unimplemented bit, read as '0'	
-n = Value at POR	'1' = Bit is set	'0' = Bit is cleared	x = Bit is unknown

bit 7 **RD16:** 16-bit Read/Write Mode Enable bit
1 = Enables register read/write of Timer3 in one 16-bit operation
0 = Enables register read/write of Timer3 in two 8-bit operations

bit 6,3 **T3CCP<2:1>:** Timer3 and Timer1 to CCPx Enable bits
1x = Timer3 is the capture/compare clock source for CCP1 and CP2
01 = Timer3 is the capture/compare clock source for CCP2 and Timer1 is the capture/compare clock source for CCP1
00 = Timer1 is the capture/compare clock source for CCP1 and CP2

bit 5-4 **T3CKPS<1:0>**: Timer3 Input Clock Prescale Select bits
11 = 1:8 Prescale value
10 = 1:4 Prescale value
01 = 1:2 Prescale value
00 = 1:1 Prescale value

bit 2 **T3SYNC:** Timer3 External Clock Input Synchronization Control bit
(Not usable if the device clock comes from Timer1/Timer3.)
When TMR3CS = 1:
1 = Do not synchronize external clock input
0 = Synchronize external clock input
When TMR3CS = 0:
This bit is ignored. Timer3 uses the internal clock when TMR3CS = 0.

bit 1 **TMR3CS:** Timer3 Clock Source Select bit
1 = External clock input from Timer1 oscillator or T13CKI (on the rising edge after the first falling edge)
0 = Internal clock (FOSC/4)

bit 0 **TMR3ON:** Timer3 On bit
1 = Enables Timer3
0 = Stops Timer3

15.1 Timer3 Operation

Timer3 can operate in one of three modes:

- Timer
- Synchronous Counter
- Asynchronous Counter

The operating mode is determined by the clock select bit, TMR3CS of the T3CON register. When TMR3CS is cleared (= 0), Timer3 increments on every internal instruction cycle (FOSC/4). When the bit is set, Timer3 increments on every rising edge of the Timer1 external clock input or the Timer1 oscillator, if enabled.

As with Timer1, the digital circuitry associated with the RC1/T1OSI and RC0/T1OSO/T13CKI pins is disabled when the Timer1 oscillator is enabled. This means the values of TRISC<1:0> are ignored and the pins are read as '0'.

FIGURE 15-1: TIMER3 BLOCK DIAGRAM

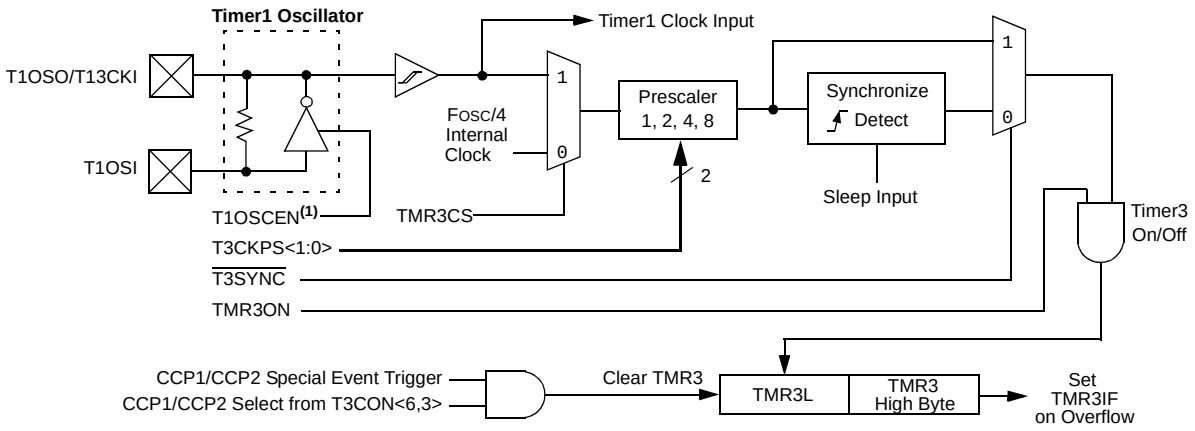

Note 1: When enable bit, T1OSCEN, is cleared, the inverter and feedback resistor are turned off to eliminate power drain.

© 2010 Microchip Technology Inc.

FIGURE 15-2: TIMER3 BLOCK DIAGRAM (16-BIT READ/WRITE MODE)

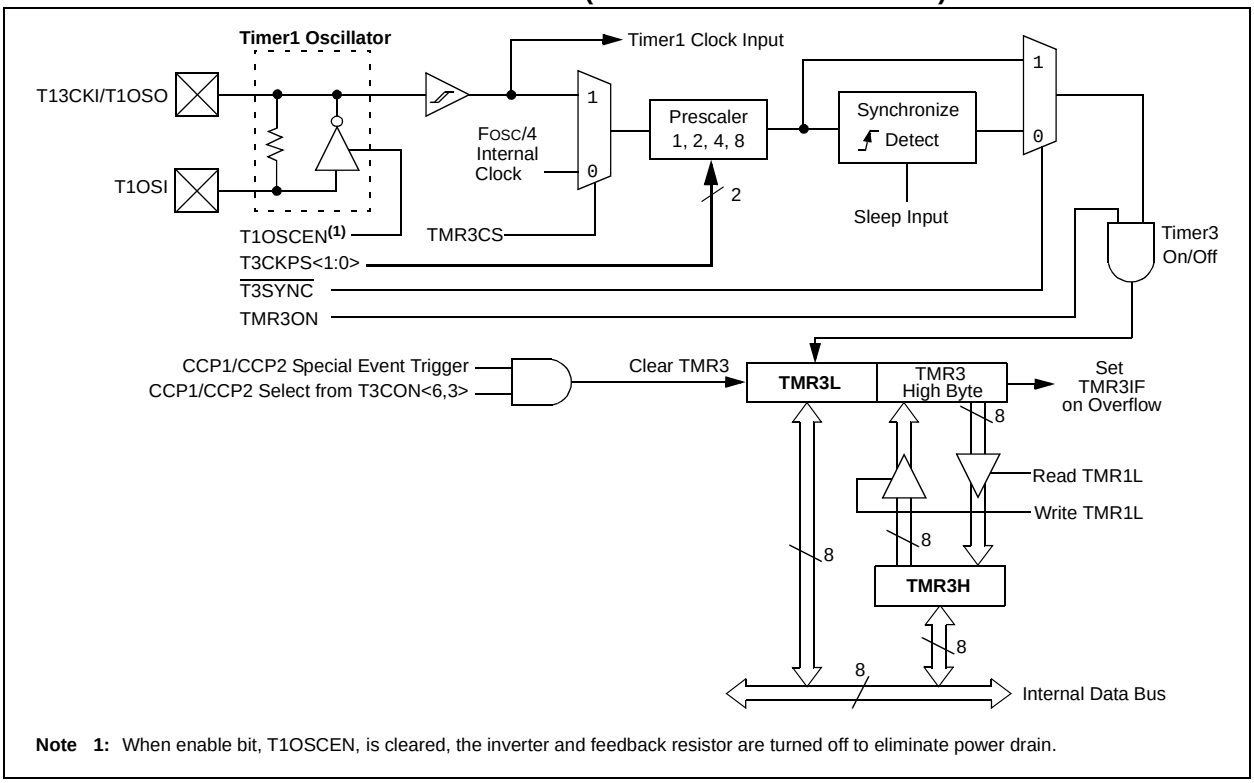

Note 1: When enable bit, T1OSCEN, is cleared, the inverter and feedback resistor are turned off to eliminate power drain.

15.2 Timer3 16-Bit Read/Write Mode

Timer3 can be configured for 16-bit reads and writes (see Figure 15-2). When the RD16 control bit of the T3CON register is set, the address for TMR3H is mapped to a buffer register for the high byte of Timer3. A read from TMR3L will load the contents of the high byte of Timer3 into the Timer3 High Byte Buffer register. This provides the user with the ability to accurately read all 16 bits of Timer1 without having to determine whether a read of the high byte, followed by a read of the low byte, has become invalid due to a rollover between reads.

A write to the high byte of Timer3 must also take place through the TMR3H Buffer register. The Timer3 high byte is updated with the contents of TMR3H when a write occurs to TMR3L. This allows a user to write all 16 bits to both the high and low bytes of Timer3 at once.

The high byte of Timer3 is not directly readable or writable in this mode. All reads and writes must take place through the Timer3 High Byte Buffer register.

Writes to TMR3H do not clear the Timer3 prescaler. The prescaler is only cleared on writes to TMR3L.

15.3 Using the Timer1 Oscillator as the Timer3 Clock Source

The Timer1 internal oscillator may be used as the clock source for Timer3. The Timer1 oscillator is enabled by setting the T1OSCEN bit of the T1CON register. To use it as the Timer3 clock source, the TMR3CS bit must also be set. As previously noted, this also configures Timer3 to increment on every rising edge of the oscillator source.

The Timer1 oscillator is described in **Section 13.0 “Timer1 Module”**.

15.4 Timer3 Interrupt

The TMR3 register pair (TMR3H:TMR3L) increments from 0000h to FFFFh and overflows to 0000h. The Timer3 interrupt, if enabled, is generated on overflow and is latched in interrupt flag bit, TMR3IF of the PIR2 register. This interrupt can be enabled or disabled by setting or clearing the Timer3 Interrupt Enable bit, TMR3IE of the PIE2 register.

15.5 Resetting Timer3 Using the CCP Special Event Trigger

If either of the CCP modules is configured to use Timer3 and to generate a Special Event Trigger in Compare mode (CCP1M<3:0> or CCP2M<3:0> = 1011), this signal will reset Timer3. It will also start an A/D conversion if the A/D module is enabled (see **Section 11.3.4 "Special Event Trigger"** for more information).

The module must be configured as either a timer or synchronous counter to take advantage of this feature. When used this way, the CCPR2H:CCPR2L register pair effectively becomes a period register for Timer3.

If Timer3 is running in Asynchronous Counter mode, the Reset operation may not work.

In the event that a write to Timer3 coincides with a Special Event Trigger from a CCP module, the write will take precedence.

Note:	The Special Event Triggers from the CCP2 module will not set the TMR3IF interrupt flag bit of the PIR2 register.

TABLE 15-1: REGISTERS ASSOCIATED WITH TIMER3 AS A TIMER/COUNTER

Name	Bit 7	Bit 6	Bit 5	Bit 4	Bit 3	Bit 2	Bit 1	Bit 0	Reset Values on page
INTCON	GIE/GIEH	PEIE/GIEL	TMR0IE	INT0IE	RBIE	TMR0IF	INT0IF	RBIF	59
PIR2	OSCFIF	C1IF	C2IF	EEIF	BCLIF	HLVDIF	TMR3IF	CCP2IF	62
PIE2	OSCFIE	C1IE	C2IE	EEIE	BCLIE	HLVDIE	TMR3IE	CCP2IE	62
IPR2	OSCFIP	C1IP	C2IP	EEIP	BCLIP	HLVDIP	TMR3IP	CCP2IP	62
TMR3L	Timer3 Register, Low Byte								61
TMR3H	Timer3 Register, High Byte								61
T1CON	RD16	T1RUN	T1CKPS1	T1CKPS0	T1OSCEN	$\overline{\text{T1SYNC}}$	TMR1CS	TMR1ON	60
T3CON	RD16	T3CCP2	T3CKPS1	T3CKPS0	T3CCP1	$\overline{\text{T3SYNC}}$	TMR3CS	TMR3ON	61

Legend: — = unimplemented, read as '0'. Shaded cells are not used by the Timer3 module.

© 2010 Microchip Technology Inc.

16.0 ENHANCED CAPTURE/COMPARE/PWM (ECCP) MODULE

CCP1 is implemented as a standard CCP module with enhanced PWM capabilities. These include:

- Provision for 2 or 4 output channels
- Output steering
- Programmable polarity
- Programmable dead-band control
- Automatic shutdown and restart.

The enhanced features are discussed in detail in **Section 16.4 "PWM (Enhanced Mode)"**. Capture, Compare and single-output PWM functions of the ECCP module are the same as described for the standard CCP module.

The control register for the enhanced CCP module is shown in Register 16-1. It differs from the CCP2CON register in that the two Most Significant bits are implemented to control PWM functionality.

REGISTER 16-1: CCP1CON: ENHANCED CAPTURE/COMPARE/PWM CONTROL REGISTER

R/W-0	R/W-0	R/W-0	R/W-0	R/W-0	R/W-0	R/W-0	R/W-0
P1M1	P1M0	DC1B1	DC1B0	CCP1M3	CCP1M2	CCP1M1	CCP1M0
bit 7							bit 0

Legend:			
R = Readable bit	W = Writable bit	U = Unimplemented bit, read as '0'	
-n = Value at POR	'1' = Bit is set	'0' = Bit is cleared	x = Bit is unknown

bit 7-6 **P1M<1:0>:** Enhanced PWM Output Configuration bits

If CCP1M<3:2> = 00, 01, 10:

xx = P1A assigned as Capture/Compare input/output; P1B, P1C, P1D assigned as port pins

If CCP1M<3:2> = 11:

00 = Single output: P1A, P1B, P1C and P1D controlled by steering (See **Section 16.4.7 "Pulse Steering Mode"**).

01 = Full-bridge output forward: P1D modulated; P1A active; P1B, P1C inactive

10 = Half-bridge output: P1A, P1B modulated with dead-band control; P1C, P1D assigned as port pins

11 = Full-bridge output reverse: P1B modulated; P1C active; P1A, P1D inactive

bit 5-4 **DC1B<1:0>**: PWM Duty Cycle bit 1 and bit 0

Capture mode:

Unused.

Compare mode:

Unused.

PWM mode:

These bits are the two LSbs of the 10-bit PWM duty cycle. The eight MSbs of the duty cycle are found in CCPR1L.

bit 3-0 **CCP1M<3:0>**: Enhanced CCP Mode Select bits

0000 = Capture/Compare/PWM off (resets ECCP module)

0001 = Reserved

0010 = Compare mode, toggle output on match

0011 = Reserved

0100 = Capture mode, every falling edge

0101 = Capture mode, every rising edge

0110 = Capture mode, every 4th rising edge

0111 = Capture mode, every 16th rising edge

1000 = Compare mode, initialize CCP1 pin low, set output on compare match (set CCP1IF)

1001 = Compare mode, initialize CCP1 pin high, clear output on compare match (set CCP1IF)

1010 = Compare mode, generate software interrupt only, CCP1 pin reverts to I/O state

1011 = Compare mode, trigger special event (ECCP resets TMR1 or TMR3, sets CC1IF bit)

1100 = PWM mode; P1A, P1C active-high; P1B, P1D active-high

1101 = PWM mode; P1A, P1C active-high; P1B, P1D active-low

1110 = PWM mode; P1A, P1C active-low; P1B, P1D active-high

1111 = PWM mode; P1A, P1C active-low; P1B, P1D active-low

In addition to the expanded range of modes available through the CCP1CON register and ECCP1AS register, the ECCP module has two additional registers associated with Enhanced PWM operation and auto-shutdown features. They are:

- PWM1CON (Dead-band delay)
- PSTRCON (output steering)

16.1 ECCP Outputs and Configuration

The enhanced CCP module may have up to four PWM outputs, depending on the selected operating mode. These outputs, designated P1A through P1D, are multiplexed with I/O pins on PORTC and PORTD (for PIC18F4XK20 devices) or PORTB (for PIC18F2XK20 devices). The outputs that are active depend on the CCP operating mode selected. The pin assignments are summarized in Table 16-1.

To configure the I/O pins as PWM outputs, the proper PWM mode must be selected by setting the P1M<1:0> and CCP1M<3:0> bits. The appropriate TRISC and TRISD direction bits for the port pins must also be set as outputs.

16.1.1 ECCP MODULES AND TIMER RESOURCES

Like the standard CCP modules, the ECCP module can utilize Timers 1, 2 or 3, depending on the mode selected. Timer1 and Timer3 are available for modules in Capture or Compare modes, while Timer2 is available for modules in PWM mode. Interactions between the standard and enhanced CCP modules are identical to those described for standard CCP modules. Additional details on timer resources are provided in **Section 11.1.1 “CCP Modules and Timer Resources”**.

16.2 Capture and Compare Modes

Except for the operation of the Special Event Trigger discussed below, the Capture and Compare modes of the ECCP module are identical in operation to that of CCP2. These are discussed in detail in **Section 11.2 “Capture Mode”** and **Section 11.3 “Compare Mode”**. No changes are required when moving between 28-pin and 40/44-pin devices.

16.2.1 SPECIAL EVENT TRIGGER

The Special Event Trigger output of ECCP1 resets the TMR1 or TMR3 register pair, depending on which timer resource is currently selected. This allows the CCPR1 register to effectively be a 16-bit programmable period register for Timer1 or Timer3.

16.3 Standard PWM Mode

When configured in Single Output mode, the ECCP module functions identically to the standard CCP module in PWM mode, as described in **Section 11.4 “PWM Mode”**. This is also sometimes referred to as “Single CCP” mode, as in Table 16-1.

© 2010 Microchip Technology Inc.

16.4 PWM (Enhanced Mode)

The Enhanced PWM Mode can generate a PWM signal on up to four different output pins with up to 10-bits of resolution. It can do this through four different PWM output modes:

- Single PWM
- Half-Bridge PWM
- Full-Bridge PWM, Forward mode
- Full-Bridge PWM, Reverse mode

To select an Enhanced PWM mode, the P1M bits of the CCP1CON register must be set appropriately.

Note:	The PWM Enhanced mode is available on the Enhanced Capture/Compare/PWM module (CCP1) only.

The PWM outputs are multiplexed with I/O pins and are designated P1A, P1B, P1C and P1D. The polarity of the PWM pins is configurable and is selected by setting the CCP1M bits in the CCP1CON register appropriately.

Table 16-1 shows the pin assignments for each Enhanced PWM mode.

Figure 16-1 shows an example of a simplified block diagram of the Enhanced PWM module.

Note:	To prevent the generation of an incomplete waveform when the PWM is first enabled, the ECCP module waits until the start of a new PWM period before generating a PWM signal.

FIGURE 16-1: EXAMPLE SIMPLIFIED BLOCK DIAGRAM OF THE ENHANCED PWM MODE

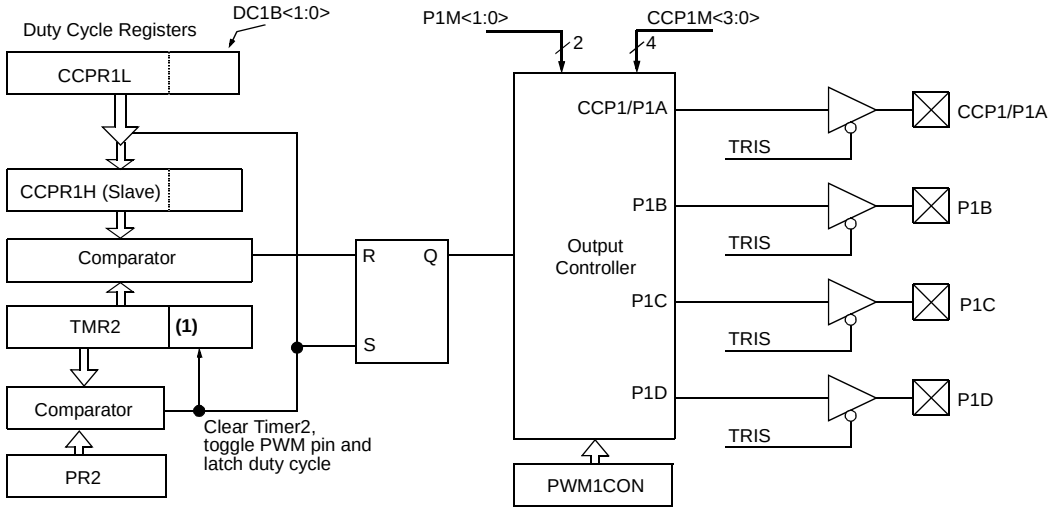

Note 1: The 8-bit timer TMR2 register is concatenated with the 2-bit internal Q clock, or 2 bits of the prescaler to create the 10-bit time base.

Note 1:	The TRIS register value for each PWM output must be configured appropriately.
2:	Clearing the CCPxCON register will relinquish ECCP control of all PWM output pins.
3:	Any pin not used by an Enhanced PWM mode is available for alternate pin functions.

TABLE 16-1: EXAMPLE PIN ASSIGNMENTS FOR VARIOUS PWM ENHANCED MODES

ECCP Mode	P1M<1:0>	CCP1/P1A	P1B	P1C	P1D
Single	00	Yes(1)	Yes(1)	Yes(1)	Yes(1)
Half-Bridge	10	Yes	Yes	No	No
Full-Bridge, Forward	01	Yes	Yes	Yes	Yes
Full-Bridge, Reverse	11	Yes	Yes	Yes	Yes

Note 1: Outputs are enabled by pulse steering in Single mode. See Register 16-4.

FIGURE 16-2: EXAMPLE PWM (ENHANCED MODE) OUTPUT RELATIONSHIPS (ACTIVE-HIGH STATE)

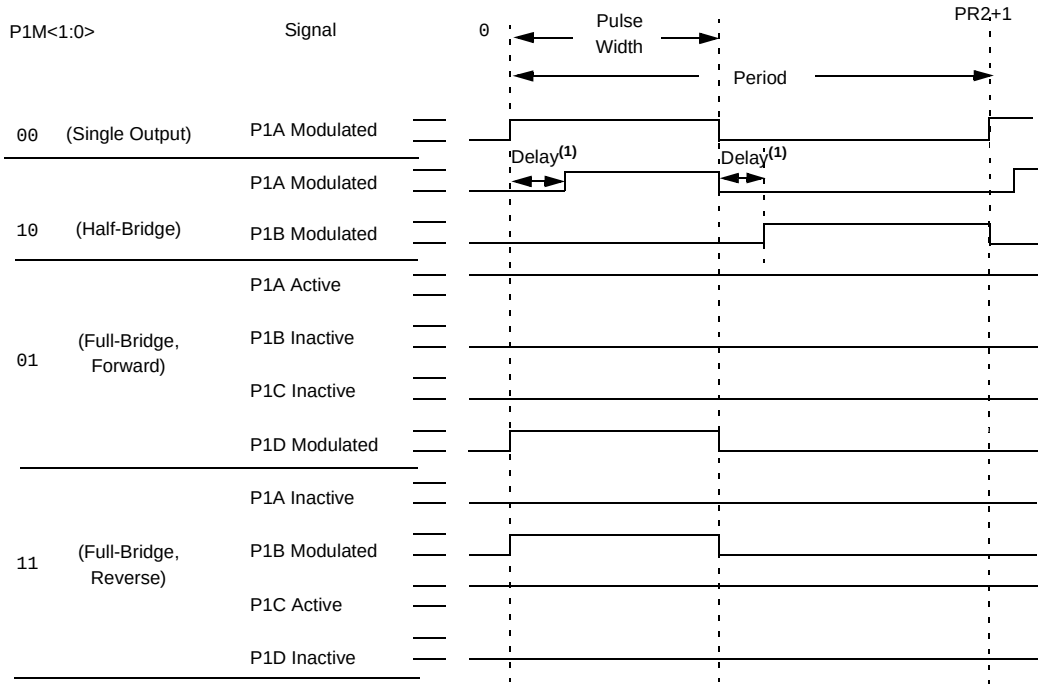

Relationships:

- Period = 4 * Tosc * (PR2 + 1) * (TMR2 Prescale Value)
- Pulse Width = Tosc * (CCPR1L<7:0>:CCP1CON<5:4>) * (TMR2 Prescale Value)
- Delay = 4 * Tosc * (PWM1CON<6:0>)

Note 1: Dead-band delay is programmed using the PWM1CON register (**Section 16.4.6 "Programmable Dead-Band Delay mode"**).

© 2010 Microchip Technology Inc.

FIGURE 16-3: EXAMPLE ENHANCED PWM OUTPUT RELATIONSHIPS (ACTIVE-LOW STATE)

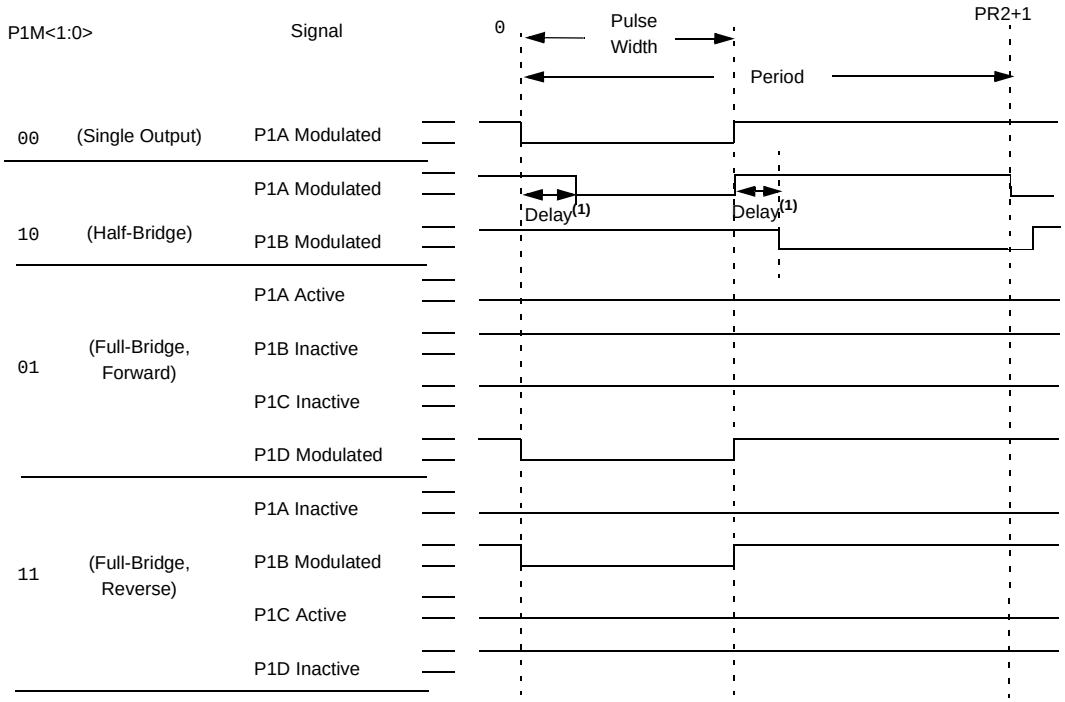

Relationships:

- Period = 4 * Tosc * (PR2 + 1) * (TMR2 Prescale Value)
- Pulse Width = Tosc * (CCPR1L<7:0>:CCP1CON<5:4>) * (TMR2 Prescale Value)
- Delay = 4 * Tosc * (PWM1CON<6:0>)

Note 1: Dead-band delay is programmed using the PWM1CON register (**Section 16.4.6 "Programmable Dead-Band Delay mode"**).

16.4.1 HALF-BRIDGE MODE

In Half-Bridge mode, two pins are used as outputs to drive push-pull loads. The PWM output signal is output on the CCPx/P1A pin, while the complementary PWM output signal is output on the P1B pin (see Figure 16-5). This mode can be used for Half-Bridge applications, as shown in Figure 16-5, or for Full-Bridge applications, where four power switches are being modulated with two PWM signals.

In Half-Bridge mode, the programmable dead-band delay can be used to prevent shoot-through current in Half-Bridge power devices. The value of the PDC<6:0> bits of the PWM1CON register sets the number of instruction cycles before the output is driven active. If the value is greater than the duty cycle, the corresponding output remains inactive during the entire cycle. See **Section 16.4.6 "Programmable Dead-Band Delay mode"** for more details of the dead-band delay operations.

Since the P1A and P1B outputs are multiplexed with the PORT data latches, the associated TRIS bits must be cleared to configure P1A and P1B as outputs.

FIGURE 16-4: EXAMPLE OF HALF-BRIDGE PWM OUTPUT

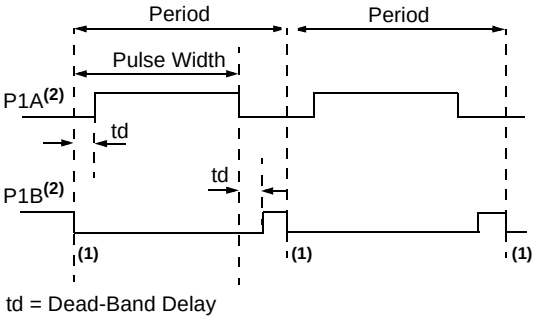

td = Dead-Band Delay

Note 1: At this time, the TMR2 register is equal to the PR2 register.

2: Output signals are shown as active-high.

FIGURE 16-5: EXAMPLE OF HALF-BRIDGE APPLICATIONS

Standard Half-Bridge Circuit ("Push-Pull")

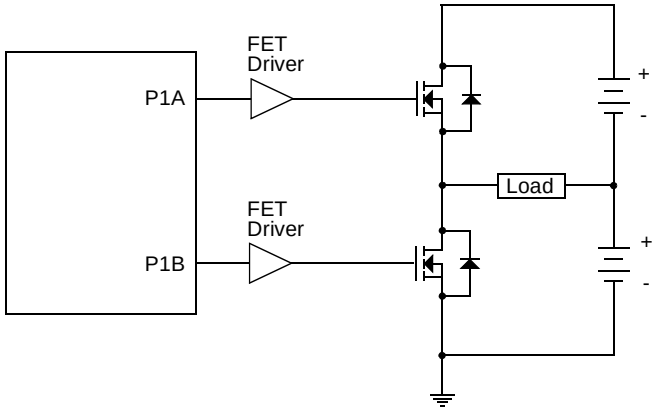

Half-Bridge Output Driving a Full-Bridge Circuit

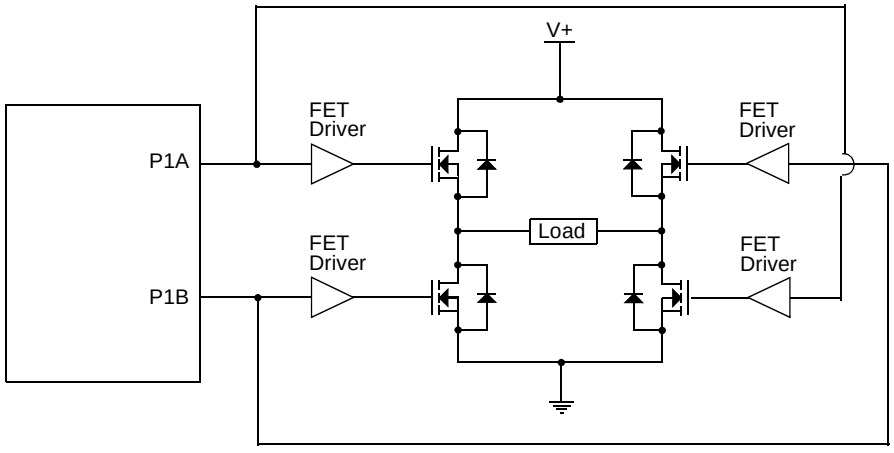

© 2010 Microchip Technology Inc.

16.4.2 FULL-BRIDGE MODE

In Full-Bridge mode, all four pins are used as outputs. An example of Full-Bridge application is shown in Figure 16-6.

In the Forward mode, pin CCP1/P1A is driven to its active state, pin P1D is modulated, while P1B and P1C will be driven to their inactive state as shown in Figure 16-7.

In the Reverse mode, P1C is driven to its active state, pin P1B is modulated, while P1A and P1D will be driven to their inactive state as shown Figure 16-7.

P1A, P1B, P1C and P1D outputs are multiplexed with the PORT data latches. The associated TRIS bits must be cleared to configure the P1A, P1B, P1C and P1D pins as outputs.

FIGURE 16-6: EXAMPLE OF FULL-BRIDGE APPLICATION

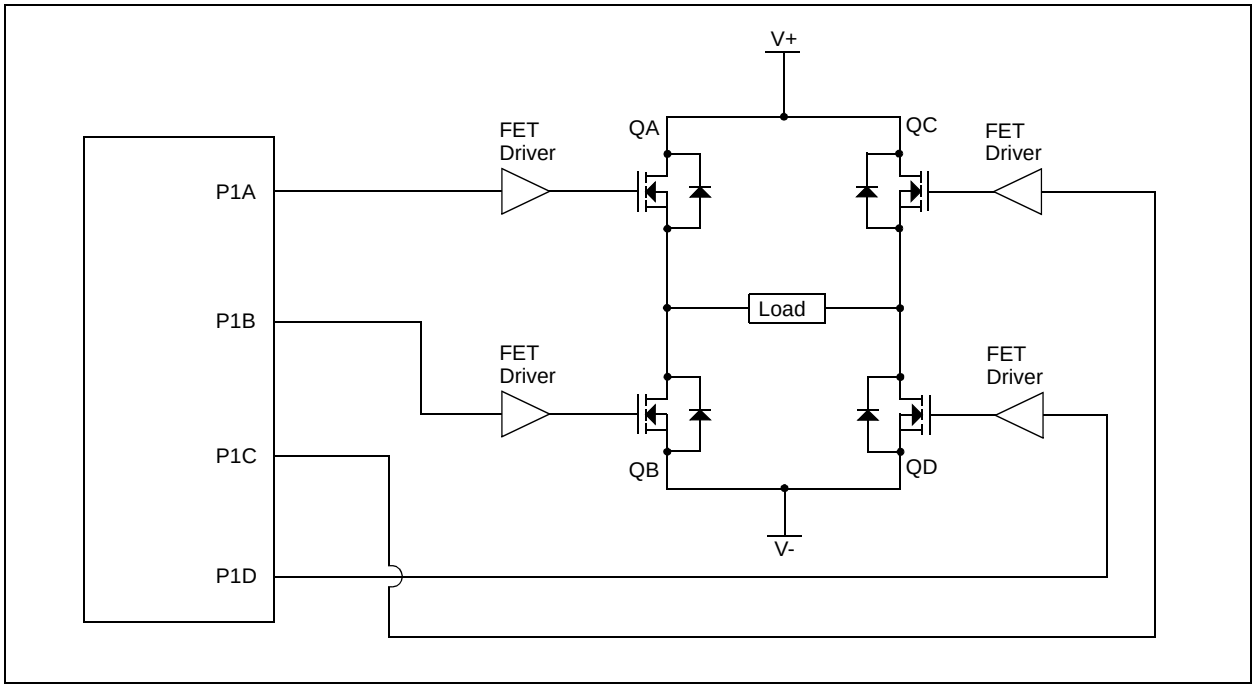

FIGURE 16-7: EXAMPLE OF FULL-BRIDGE PWM OUTPUT

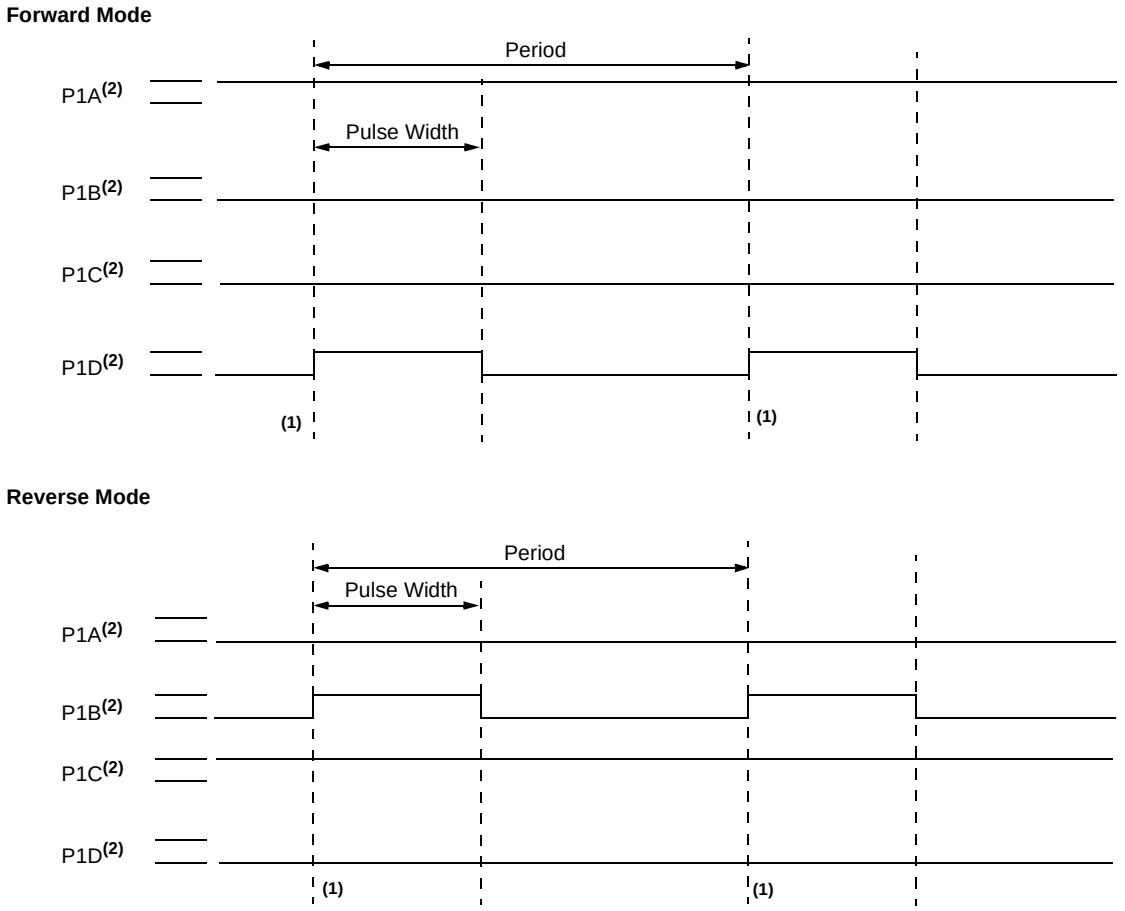

Note 1: At this time, the TMR2 register is equal to the PR2 register.

2: Output signal is shown as active-high.

© 2010 Microchip Technology Inc.

16.4.2.1 Direction Change in Full-Bridge Mode

In the Full-Bridge mode, the P1M1 bit in the CCP1CON register allows users to control the forward/reverse direction. When the application firmware changes this direction control bit, the module will change to the new direction on the next PWM cycle.

A direction change is initiated in software by changing the P1M1 bit of the CCP1CON register. The following sequence occurs prior to the end of the current PWM period:

- The modulated outputs (P1B and P1D) are placed in their inactive state.
- The associated unmodulated outputs (P1A and P1C) are switched to drive in the opposite direction.
- PWM modulation resumes at the beginning of the next period.

See Figure 16-8 for an illustration of this sequence.

The Full-Bridge mode does not provide dead-band delay. As one output is modulated at a time, dead-band delay is generally not required. There is a situation where dead-band delay is required. This situation occurs when both of the following conditions are true:

1. The direction of the PWM output changes when the duty cycle of the output is at or near 100%.
2. The turn off time of the power switch, including the power device and driver circuit, is greater than the turn on time.

Figure 16-9 shows an example of the PWM direction changing from forward to reverse, at a near 100% duty cycle. In this example, at time t1, the output P1A and P1D become inactive, while output P1C becomes active. Since the turn off time of the power devices is longer than the turn on time, a shoot-through current will flow through power devices QC and QD (see Figure 16-6) for the duration of 't'. The same phenomenon will occur to power devices QA and QB for PWM direction change from reverse to forward.

If changing PWM direction at high duty cycle is required for an application, two possible solutions for eliminating the shoot-through current are:

1. Reduce PWM duty cycle for one PWM period before changing directions.
2. Use switch drivers that can drive the switches off faster than they can drive them on.

Other options to prevent shoot-through current may exist.

FIGURE 16-8: EXAMPLE OF PWM DIRECTION CHANGE

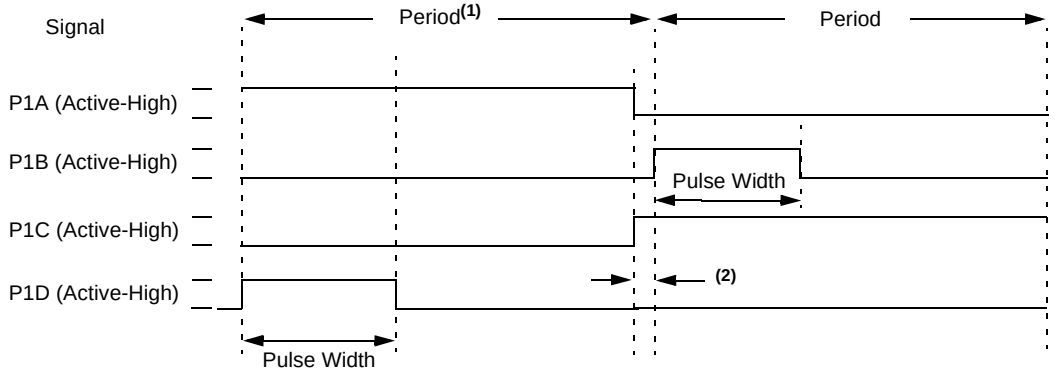

Note 1: The direction bit P1M1 of the CCP1CON register is written any time during the PWM cycle.

2: When changing directions, the P1A and P1C signals switch before the end of the current PWM cycle. The modulated P1B and P1D signals are inactive at this time. The length of this time is (1/FOSC) • TMR2 prescale value.

FIGURE 16-9: EXAMPLE OF PWM DIRECTION CHANGE AT NEAR 100% DUTY CYCLE

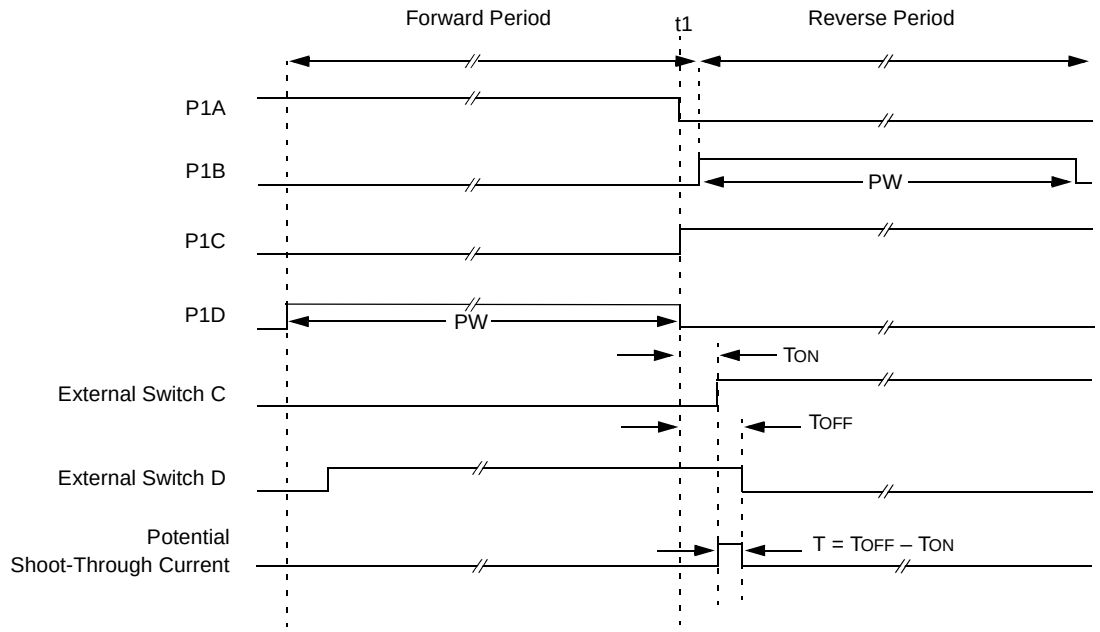

Note 1: All signals are shown as active-high.

2: TON is the turn on delay of power switch QC and its driver.

3: TOFF is the turn off delay of power switch QD and its driver.

16.4.3 START-UP CONSIDERATIONS

When any PWM mode is used, the application hardware must use the proper external pull-up and/or pull-down resistors on the PWM output pins.

Note:	When the microcontroller is released from Reset, all of the I/O pins are in the high-impedance state. The external circuits must keep the power switch devices in the Off state until the microcontroller drives the I/O pins with the proper signal levels or activates the PWM output(s).

The CCP1M<1:0> bits of the CCP1CON register allow the user to choose whether the PWM output signals are active-high or active-low for each pair of PWM output pins (P1A/P1C and P1B/P1D). The PWM output polarities must be selected before the PWM pin output drivers are enabled. Changing the polarity configuration while the PWM pin output drivers are enable is not recommended since it may result in damage to the application circuits.

The P1A, P1B, P1C and P1D output latches may not be in the proper states when the PWM module is initialized. Enabling the PWM pin output drivers at the same time as the Enhanced PWM modes may cause damage to the application circuit. The Enhanced PWM modes must be enabled in the proper Output mode and complete a full PWM cycle before enabling the PWM pin output drivers. The completion of a full PWM cycle is indicated by the TMR2IF bit of the PIR1 register being set as the second PWM period begins.

© 2010 Microchip Technology Inc.

16.4.4 ENHANCED PWM AUTO-SHUTDOWN MODE

The PWM mode supports an Auto-Shutdown mode that will disable the PWM outputs when an external shutdown event occurs. Auto-Shutdown mode places the PWM output pins into a predetermined state. This mode is used to help prevent the PWM from damaging the application.

The auto-shutdown sources are selected using the ECCPAS<2:0> bits of the ECCP1AS register. A shutdown event may be generated by:

- A logic '0' on the FLT0 pin
- Comparator C1
- Comparator C2
- Setting the ECCPASE bit in firmware

A shutdown condition is indicated by the ECCPASE (Auto-Shutdown Event Status) bit of the ECCP1AS register. If the bit is a '0', the PWM pins are operating normally. If the bit is a '1', the PWM outputs are in the shutdown state.

When a shutdown event occurs, two things happen:

The ECCPASE bit is set to '1'. The ECCPASE will remain set until cleared in firmware or an auto-restart occurs (see **Section 16.4.5 "Auto-Restart Mode"**).

The enabled PWM pins are asynchronously placed in their shutdown states. The PWM output pins are grouped into pairs [P1A/P1C] and [P1B/P1D]. The state of each pin pair is determined by the PSSAC and PSSBD bits of the ECCP1AS register. Each pin pair may be placed into one of three states:

- Drive logic '1'
- Drive logic '0'
- Tri-state (high-impedance)

REGISTER 16-2: ECCP1AS: ENHANCED CAPTURE/COMPARE/PWM AUTO-SHUTDOWN CONTROL REGISTER

R/W-0	R/W-0	R/W-0	R/W-0	R/W-0	R/W-0	R/W-0	R/W-0
ECCPASE	ECCPAS2	ECCPAS1	ECCPAS0	PSSAC1	PSSAC0	PSSBD1	PSSBD0
bit 7							bit 0

Legend:			
R = Readable bit	W = Writable bit	U = Unimplemented bit, read as '0'	
-n = Value at POR	'1' = Bit is set	'0' = Bit is cleared	x = Bit is unknown

bit 7 **ECCPASE:** ECCP Auto-Shutdown Event Status bit
1 = A shutdown event has occurred; ECCP outputs are in shutdown state
0 = ECCP outputs are operating

bit 6-4 **ECCPAS<2:0>:** ECCP Auto-shutdown Source Select bits
000 = Auto-Shutdown is disabled
001 = Comparator C1OUT output is high
010 = Comparator C2OUT output is high
011 = Either Comparator C1OUT or C2OUT is high
100 = VIL on FLT0 pin
101 = VIL on FLT0 pin or Comparator C1OUT output is high
110 = VIL on FLT0 pin or Comparator C2OUT output is high
111 = VIL on FLT0 pin or Comparator C1OUT or Comparator C2OUT is high

bit 3-2 **PSSACn:** Pins P1A and P1C Shutdown State Control bits
00 = Drive pins P1A and P1C to '0'
01 = Drive pins P1A and P1C to '1'
1x = Pins P1A and P1C tri-state

bit 1-0 **PSSBDn:** Pins P1B and P1D Shutdown State Control bits
00 = Drive pins P1B and P1D to '0'
01 = Drive pins P1B and P1D to '1'
1x = Pins P1B and P1D tri-state

Note 1: The auto-shutdown condition is a level-based signal, not an edge-based signal. As long as the level is present, the auto-shutdown will persist.

2: Writing to the ECCPASE bit is disabled while an auto-shutdown condition persists.

3: Once the auto-shutdown condition has been removed and the PWM restarted (either through firmware or auto-restart) the PWM signal will always restart at the beginning of the next PWM period.

FIGURE 16-10: PWM AUTO-SHUTDOWN WITH FIRMWARE RESTART (PRSEN = 0)

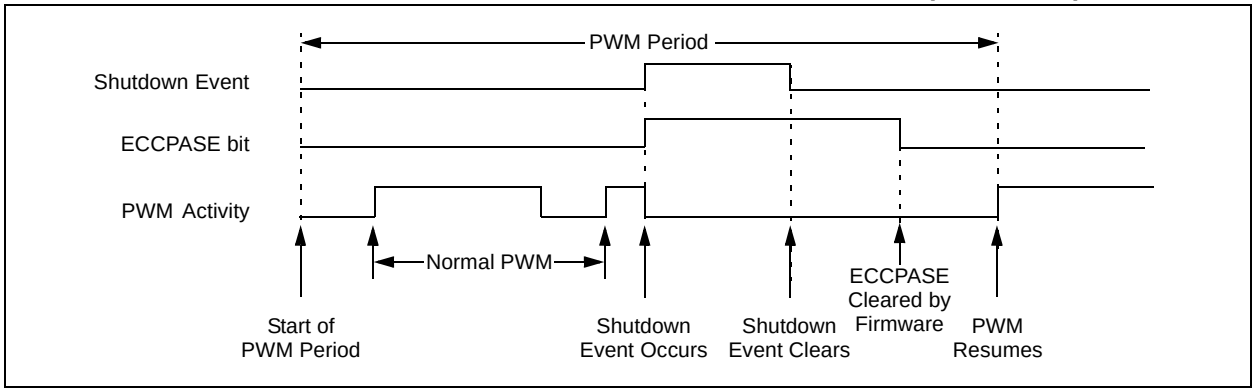

16.4.5 AUTO-RESTART MODE

The Enhanced PWM can be configured to automatically restart the PWM signal once the auto-shutdown condition has been removed. Auto-restart is enabled by setting the PRSEN bit in the PWM1CON register.

If auto-restart is enabled, the ECCPASE bit will remain set as long as the auto-shutdown condition is active. When the auto-shutdown condition is removed, the ECCPASE bit will be cleared via hardware and normal operation will resume.

FIGURE 16-11: PWM AUTO-SHUTDOWN WITH AUTO-RESTART ENABLED (PRSEN = 1)

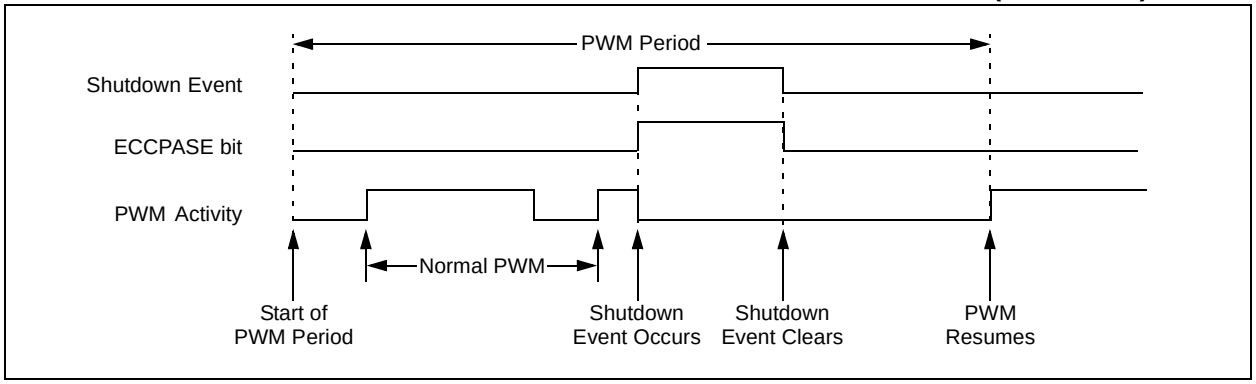

© 2010 Microchip Technology Inc.

16.4.6 PROGRAMMABLE DEAD-BAND DELAY MODE

In Half-Bridge applications where all power switches are modulated at the PWM frequency, the power switches normally require more time to turn off than to turn on. If both the upper and lower power switches are switched at the same time (one turned on, and the other turned off), both switches may be on for a short period of time until one switch completely turns off. During this brief interval, a very high current (shoot-through current) will flow through both power switches, shorting the bridge supply. To avoid this potentially destructive shoot-through current from flowing during switching, turning on either of the power switches is normally delayed to allow the other switch to completely turn off.

In Half-Bridge mode, a digitally programmable dead-band delay is available to avoid shoot-through current from destroying the bridge power switches. The delay occurs at the signal transition from the non-active state to the active state. See Figure 16-12 for illustration. The lower seven bits of the associated PWM1CON register (Register 16-3) sets the delay period in terms of microcontroller instruction cycles (T_{CY} or 4 T_{OSC}).

FIGURE 16-12: EXAMPLE OF HALF-BRIDGE PWM OUTPUT

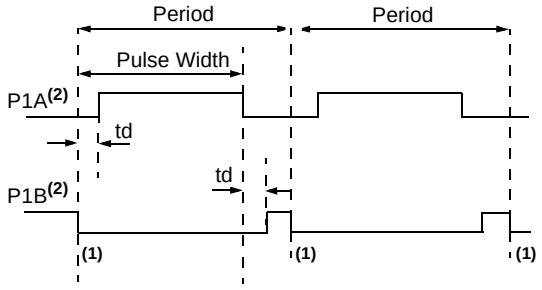

td = Dead-Band Delay

Note 1: At this time, the TMR2 register is equal to the PR2 register.

2: Output signals are shown as active-high.

FIGURE 16-13: EXAMPLE OF HALF-BRIDGE APPLICATIONS

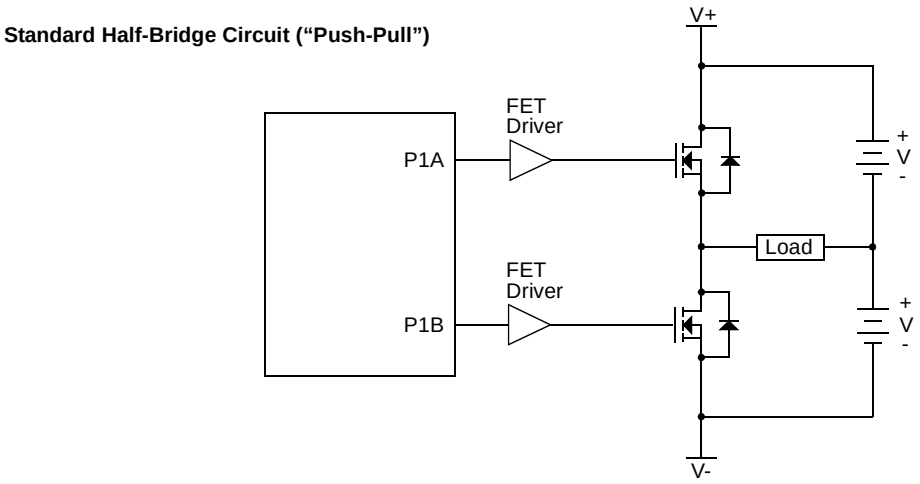

REGISTER 16-3: PWM1CON: ENHANCED PWM CONTROL REGISTER

R/W-0	R/W-0	R/W-0	R/W-0	R/W-0	R/W-0	R/W-0	R/W-0
PRSEN	PDC6	PDC5	PDC4	PDC3	PDC2	PDC1	PDC0
bit 7							bit 0

Legend:			
R = Readable bit	W = Writable bit	U = Unimplemented bit, read as ‘0’	
-n = Value at POR	‘1’ = Bit is set	‘0’ = Bit is cleared	x = Bit is unknown

bit 7 **PRSEN:** PWM Restart Enable bit

1 = Upon auto-shutdown, the ECCPASE bit clears automatically once the shutdown event goes away; the PWM restarts automatically

0 = Upon auto-shutdown, ECCPASE must be cleared by software to restart the PWM

bit 6-0 **PDC<6:0>:** PWM Delay Count bits

PDCn = Number of FOSC/4 (4 * TOSC) cycles between the scheduled time when a PWM signal **should** transition active and the **actual** time it transitions active

© 2010 Microchip Technology Inc.

16.4.7 PULSE STEERING MODE

In Single Output mode, pulse steering allows any of the PWM pins to be the modulated signal. Additionally, the same PWM signal can be simultaneously available on multiple pins.

Once the Single Output mode is selected (CCP1M<3:2> = 11 and P1M<1:0> = 00 of the CCP1CON register), the user firmware can bring out the same PWM signal to one, two, three or four output pins by setting the appropriate STR<D:A> bits of the PSTRCON register, as shown in Table 16-1.

Note:	The associated TRIS bits must be set to output ('0') to enable the pin output driver in order to see the PWM signal on the pin.

While the PWM Steering mode is active, CCP1M<1:0> bits of the CCP1CON register select the PWM output polarity for the P1<D:A> pins.

The PWM auto-shutdown operation also applies to PWM Steering mode as described in **Section 16.4.4 "Enhanced PWM Auto-shutdown mode"**. An auto-shutdown event will only affect pins that have PWM outputs enabled.

REGISTER 16-4: PSTRCON: PULSE STEERING CONTROL REGISTER(1)

U-0	U-0	U-0	R/W-0	R/W-0	R/W-0	R/W-0	R/W-1
—	—	—	STRSYNC	STRD	STRC	STRB	STRA
bit 7							bit 0

Legend:			
R = Readable bit	W = Writable bit	U = Unimplemented bit, read as '0'	
-n = Value at POR	'1' = Bit is set	'0' = Bit is cleared	x = Bit is unknown

bit 7-5 **Unimplemented:** Read as '0'

bit 4 **STRSYNC:** Steering Sync bit
1 = Output steering update occurs on next PWM period
0 = Output steering update occurs at the beginning of the instruction cycle boundary

bit 3 **STRD:** Steering Enable bit D
1 = P1D pin has the PWM waveform with polarity control from CCPxM<1:0>
0 = P1D pin is assigned to port pin

bit 2 **STRC:** Steering Enable bit C
1 = P1C pin has the PWM waveform with polarity control from CCPxM<1:0>
0 = P1C pin is assigned to port pin

bit 1 **STRB:** Steering Enable bit B
1 = P1B pin has the PWM waveform with polarity control from CCPxM<1:0>
0 = P1B pin is assigned to port pin

bit 0 **STRA:** Steering Enable bit A
1 = P1A pin has the PWM waveform with polarity control from CCPxM<1:0>
0 = P1A pin is assigned to port pin

Note 1: The PWM Steering mode is available only when the CCP1CON register bits CCP1M<3:2> = 11 and P1M<1:0> = 00.

FIGURE 16-14: SIMPLIFIED STEERING BLOCK DIAGRAM

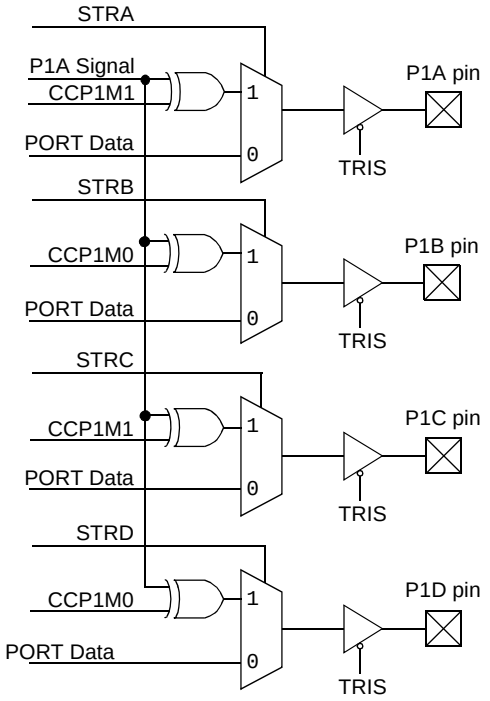

Note 1: Port outputs are configured as shown when the CCP1CON register bits P1M<1:0> = 00 and CCP1M<3:2> = 11.

2: Single PWM output requires setting at least one of the STRx bits.

© 2010 Microchip Technology Inc.

16.4.7.1 Steering Synchronization

The STRSYNC bit of the PSTRCON register gives the user two selections of when the steering event will happen. When the STRSYNC bit is '0', the steering event will happen at the end of the instruction that writes to the PSTRCON register. In this case, the output signal at the P1<D:A> pins may be an incomplete PWM waveform. This operation is useful when the user firmware needs to immediately remove a PWM signal from the pin.

When the STRSYNC bit is '1', the effective steering update will happen at the beginning of the next PWM period. In this case, steering on/off the PWM output will always produce a complete PWM waveform.

Figures 16-15 and 16-16 illustrate the timing diagrams of the PWM steering depending on the STRSYNC setting.

FIGURE 16-15: EXAMPLE OF STEERING EVENT AT END OF INSTRUCTION (STRSYNC = 0)

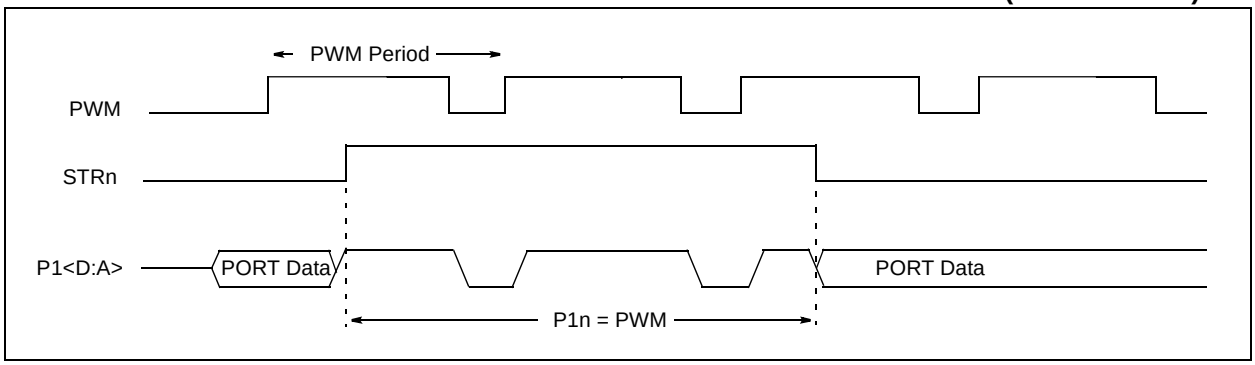

FIGURE 16-16: EXAMPLE OF STEERING EVENT AT BEGINNING OF INSTRUCTION (STRSYNC = 1)

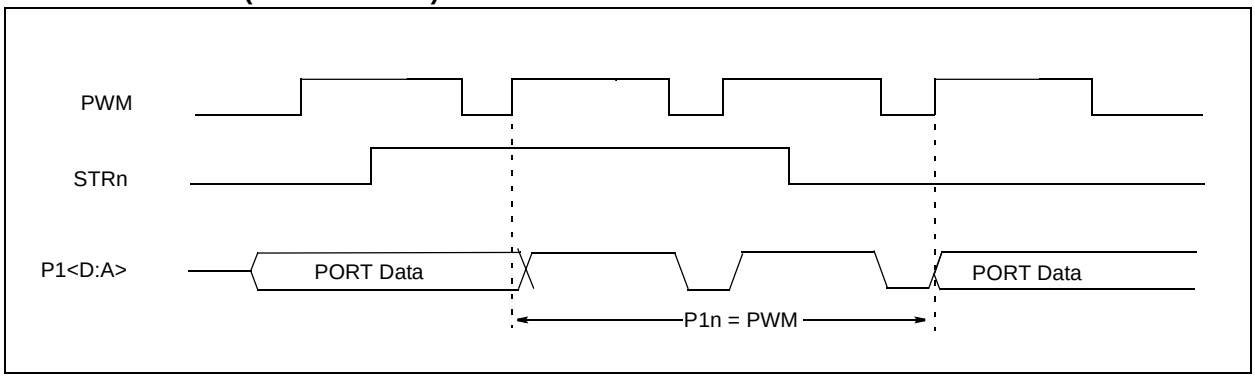

16.4.8 OPERATION IN POWER-MANAGED MODES

In Sleep mode, all clock sources are disabled. Timer2 will not increment and the state of the module will not change. If the ECCP pin is driving a value, it will continue to drive that value. When the device wakes up, it will continue from this state. If Two-Speed Start-ups are enabled, the initial start-up frequency from HFINTOSC and the postscaler may not be stable immediately.

In PRI_IDLE mode, the primary clock will continue to clock the ECCP module without change. In all other power-managed modes, the selected power-managed mode clock will clock Timer2. Other power-managed mode clocks will most likely be different than the primary clock frequency.

16.4.8.1 Operation with Fail-Safe Clock Monitor

If the Fail-Safe Clock Monitor is enabled, a clock failure will force the device into the RC_RUN Power-Managed mode and the OSCFIF bit of the PIR2 register will be set. The ECCP will then be clocked from the internal oscillator clock source, which may have a different clock frequency than the primary clock.

See the previous section for additional details.

16.4.9 EFFECTS OF A RESET

Both Power-on Reset and subsequent Resets will force all ports to Input mode and the CCP registers to their Reset states.

This forces the enhanced CCP module to reset to a state compatible with the standard CCP module.

© 2010 Microchip Technology Inc.

TABLE 16-2: REGISTERS ASSOCIATED WITH ECCP1 MODULE AND TIMER1 TO TIMER3

Name	Bit 7	Bit 6	Bit 5	Bit 4	Bit 3	Bit 2	Bit 1	Bit 0	Reset Values on page
INTCON	GIE/GIEH	PEIE/GIEL	TMR0IE	INT0IE	RBIE	TMR0IF	INT0IF	RBIF	59
RCON	IPEN	SBOREN	—	$\overline{RI}$	$\overline{TO}$	$\overline{PD}$	$\overline{POR}$	$\overline{BOR}$	58
PIR1	PSPIF	ADIF	RCIF	TXIF	SSPIF	CCP1IF	TMR2IF	TMR1IF	62
PIE1	PSPIE	ADIE	RCIE	TXIE	SSPIE	CCP1IE	TMR2IE	TMR1IE	62
IPR1	PSPIP	ADIP	RCIP	TXIP	SSPIP	CCP1IP	TMR2IP	TMR1IP	62
PIR2	OSCFIF	C1IF	C2IF	EEIF	BCLIF	HLVDIF	TMR3IF	CCP2IF	62
PIE2	OSCFIE	C1IE	C2IE	EEIE	BCLIE	HLVDIE	TMR3IE	CCP2IE	62
IPR2	OSCFIP	C1IP	C2IP	EEIP	BCLIP	HLVDIP	TMR3IP	CCP2IP	62
TRISB	PORTB Data Direction Control Register								62
TRISC	PORTC Data Direction Control Register								62
TRISD	PORTD Data Direction Control Register								62
TMR1L	Timer1 Register, Low Byte								60
TMR1H	Timer1 Register, High Byte								60
T1CON	RD16	T1RUN	T1CKPS1	T1CKPS0	T1OSCEN	$\overline{T1SYNC}$	TMR1CS	TMR1ON	60
TMR2	Timer2 Register								60
T2CON	—	T2OUTPS3	T2OUTPS2	T2OUTPS1	T2OUTPS0	TMR2ON	T2CKPS1	T2CKPS0	60
PR2	Timer2 Period Register								60
TMR3L	Timer3 Register, Low Byte								61
TMR3H	Timer3 Register, High Byte								61
T3CON	RD16	T3CCP2	T3CKPS1	T3CKPS0	T3CCP1	$\overline{T3SYNC}$	TMR3CS	TMR3ON	61
CCPR1L	Capture/Compare/PWM Register 1, Low Byte								61
CCPR1H	Capture/Compare/PWM Register 1, High Byte								61
CCP1CON	P1M1	P1M0	DC1B1	DC1B0	CCP1M3	CCP1M2	CCP1M1	CCP1M0	61
ECCP1AS	ECCPASE	ECCPAS2	ECCPAS1	ECCPAS0	PSSAC1	PSSAC0	PSSBD1	PSSBD0	61
PWM1CON	PRSEN	PDC6	PDC5	PDC4	PDC3	PDC2	PDC1	PDC0	61

Legend: — = unimplemented, read as '0'. Shaded cells are not used during ECCP operation.

NOTES:

© 2010 Microchip Technology Inc.

17.0 MASTER SYNCHRONOUS SERIAL PORT (MSSP) MODULE

17.1 Master SSP (MSSP) Module Overview

The Master Synchronous Serial Port (MSSP) module is a serial interface, useful for communicating with other peripheral or microcontroller devices. These peripheral devices may be serial EEPROMs, shift registers, display drivers, A/D converters, etc. The MSSP module can operate in one of two modes:

- Serial Peripheral Interface (SPI)
- Inter-Integrated Circuit (I^2C)
  - Full Master mode
  - Slave mode (with general address call)

The I^2C interface supports the following modes in hardware:

- Master mode
- Multi-Master mode
- Slave mode

17.2 Control Registers

The MSSP module has seven associated registers. These include:

- SSPSTA – STATUS register
- SSPCON1 – First Control register
- SSPCON2 – Second Control register
- SSPBUF – Transmit/Receive buffer
- SSPSR – Shift register (not directly accessible)
- SSPADD – Address register
- SSPMSK – Address Mask register

The use of these registers and their individual Configuration bits differ significantly depending on whether the MSSP module is operated in SPI or I^2C mode.

Additional details are provided under the individual sections.

17.3 SPI Mode

The SPI mode allows 8 bits of data to be synchronously transmitted and received simultaneously. All four modes of SPI are supported. To accomplish communication, typically three pins are used:

- Serial Data Out – SDO
- Serial Data In – SDI/SDA
- Serial Clock – SCK/SCL

Additionally, a fourth pin may be used when in a Slave mode of operation:

- Slave Select – $\overline{SS}$

Figure 17-1 shows the block diagram of the MSSP module when operating in SPI mode.

FIGURE 17-1: MSSP BLOCK DIAGRAM (SPI MODE)

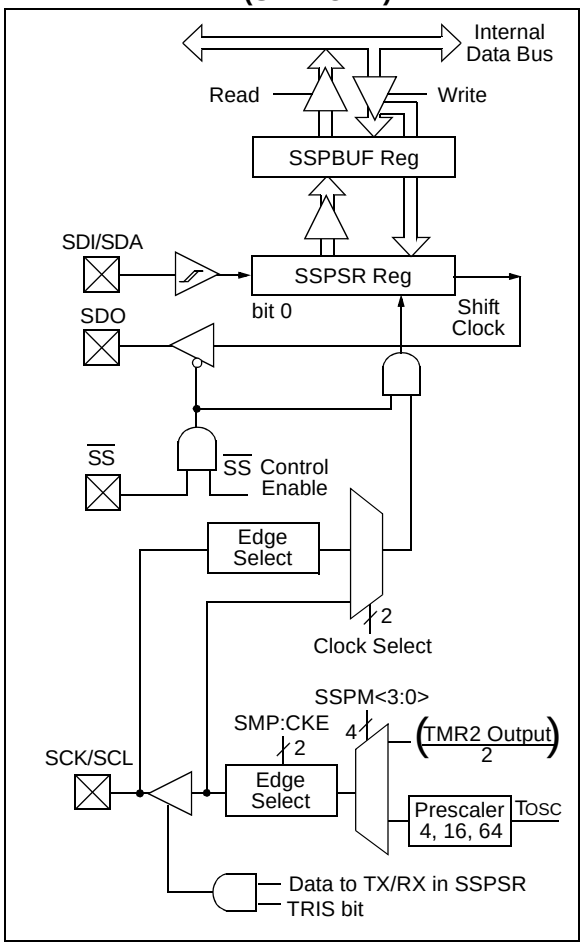

17.3.1 REGISTERS

The MSSP module has four registers for SPI mode operation. These are:

- SSPCON1 – Control Register
- SSPSTAT – STATUS register
- SSPBUF – Serial Receive/Transmit Buffer
- SSPSR – Shift Register (Not directly accessible)

SSPCON1 and SSPSTAT are the control and STATUS registers in SPI mode operation. The SSPCON1 register is readable and writable. The lower 6 bits of the SSPSTAT are read-only. The upper two bits of the SSPSTAT are read/write.

SSPSR is the shift register used for shifting data in and out. SSPBUF provides indirect access to the SSPSR register. SSPBUF is the buffer register to which data bytes are written, and from which data bytes are read.

In receive operations, SSPSR and SSPBUF together create a double-buffered receiver. When SSPSR receives a complete byte, it is transferred to SSPBUF and the SSPIF interrupt is set.

During transmission, the SSPBUF is not double-buffered. A write to SSPBUF will write to both SSPBUF and SSPSR.

REGISTER 17-1: SSPSTAT: MSSP STATUS REGISTER (SPI MODE)

R/W-0	R/W-0	R-0	R-0	R-0	R-0	R-0	R-0
SMP	CKE	D/$\overline{A}$	P	S	R/$\overline{W}$	UA	BF
bit 7							bit 0

Legend:			
R = Readable bit	W = Writable bit	U = Unimplemented bit, read as ‘0’	
-n = Value at POR	‘1’ = Bit is set	‘0’ = Bit is cleared	x = Bit is unknown

bit 7 **SMP:** Sample bit
SPI Master mode:
1 = Input data sampled at end of data output time
0 = Input data sampled at middle of data output time
SPI Slave mode:
SMP must be cleared when SPI is used in Slave mode.

bit 6 **CKE:** SPI Clock Select bit(1)
1 = Output data changes on clock transition from active to idle
0 = Output data changes on clock transition from idle to active

bit 5 **D/$\overline{A}$:** Data/$\overline{Address}$ bit
Used in I^2C mode only.

bit 4 **P:** Stop bit
Used in I^2C mode only. This bit is cleared when the MSSP module is disabled, SSPEN is cleared.

bit 3 **S:** Start bit
Used in I^2C mode only.

bit 2 **R/$\overline{W}$:** Read/$\overline{Write}$ Information bit
Used in I^2C mode only.

bit 1 **UA:** Update Address bit
Used in I^2C mode only.

bit 0 **BF:** Buffer Full Status bit (Receive mode only)
1 = Receive complete, SSPBUF is full
0 = Receive not complete, SSPBUF is empty

Note 1: Polarity of clock state is set by the CKP bit of the SSPCON1 register.

© 2010 Microchip Technology Inc.

REGISTER 17-2: SSPCON1: MSSP CONTROL 1 REGISTER (SPI MODE)

R/W-0	R/W-0	R/W-0	R/W-0	R/W-0	R/W-0	R/W-0	R/W-0
WCOL	SSPOV	SSPEN	CKP	SSPM3	SSPM2	SSPM1	SSPM0
bit 7							bit 0

Legend:			
R = Readable bit	W = Writable bit	U = Unimplemented bit, read as '0'	
-n = Value at POR	'1' = Bit is set	'0' = Bit is cleared	x = Bit is unknown

bit 7 **WCOL:** Write Collision Detect bit (Transmit mode only)
1 = The SSPBUF register is written while it is still transmitting the previous word (must be cleared by software)
0 = No collision

bit 6 **SSPOV:** Receive Overflow Indicator bit(1)
SPI Slave mode:
1 = A new byte is received while the SSPBUF register is still holding the previous data. In case of overflow, the data in SSPSR is lost. Overflow can only occur in Slave mode. The user must read the SSPBUF, even if only transmitting data, to avoid setting overflow (must be cleared by software).
0 = No overflow

bit 5 **SSPEN:** Synchronous Serial Port Enable bit(2)
1 = Enables serial port and configures SCK, SDO, SDI and $\overline{SS}$ as serial port pins. When enabled, the SDA and SCL pins must be configured as inputs.
0 = Disables serial port and configures these pins as I/O port pins

bit 4 **CKP:** Clock Polarity Select bit
1 = Idle state for clock is a high level
0 = Idle state for clock is a low level

bit 3-0 **SSPM<3:0>:** Synchronous Serial Port Mode Select bits(3)
0101 = SPI Slave mode, clock = SCK pin, $\overline{SS}$ pin control disabled, $\overline{SS}$ can be used as I/O pin
0100 = SPI Slave mode, clock = SCK pin, $\overline{SS}$ pin control enabled
0011 = SPI Master mode, clock = TMR2 output/2
0010 = SPI Master mode, clock = FOSC/64
0001 = SPI Master mode, clock = FOSC/16
0000 = SPI Master mode, clock = FOSC/4

Note 1: In Master mode, the overflow bit is not set since each new reception (and transmission) is initiated by writing to the SSPBUF register.
2: When enabled, these pins must be properly configured as input or output.
3: Bit combinations not specifically listed here are either reserved or implemented in I^2C mode only.

17.3.2 OPERATION

When initializing the SPI, several options need to be specified. This is done by programming the appropriate control bits (SSPCON1<5:0> and SSPSTAT<7:6>). These control bits allow the following to be specified:

- Master mode (SCK is the clock output)
- Slave mode (SCK is the clock input)
- Clock Polarity (Idle state of SCK)
- Data Input Sample Phase (middle or end of data output time)
- Clock Edge (output data on rising/falling edge of SCK)
- Clock Rate (Master mode only)
- Slave Select mode (Slave mode only)

The MSSP consists of a transmit/receive shift register (SSPSR) and a buffer register (SSPBUF). The SSPSR shifts the data in and out of the device, MSb first. The SSPBUF holds the data that was written to the SSPSR until the received data is ready. Once the 8 bits of data have been received, that byte is moved to the SSPBUF register. Then, the Buffer Full detect bit, BF of the SSPSTAT register, and the interrupt flag bit, SSPIF, are set. This double-buffering of the received data (SSPBUF) allows the next byte to start reception before reading the data that was just received. Any write to the SSPBUF register during transmission/reception of data will be ignored and the write collision detect bit WCOL of the SSPCON1 register, will be set. User software must clear the WCOL bit so that it can be determined if the following write(s) to the SSPBUF register completed successfully.

When the application software is expecting to receive valid data, the SSPBUF should be read before the next byte of data to transfer is written to the SSPBUF. The Buffer Full bit, BF of the SSPSTAT register, indicates when SSPBUF has been loaded with the received data (transmission is complete). When the SSPBUF is read, the BF bit is cleared. This data may be irrelevant if the SPI is only a transmitter. Generally, the MSSP interrupt is used to determine when the transmission/reception has completed. The SSPBUF must be read and/or written. If the interrupt method is not going to be used, then software polling can be done to ensure that a write collision does not occur. Example 17-1 shows the loading of the SSPBUF (SSPSR) for data transmission.

The SSPSR is not directly readable or writable and can only be accessed by addressing the SSPBUF register. Additionally, the MSSP STATUS register (SSPSTAT) indicates the various status conditions.

EXAMPLE 17-1: LOADING THE SSPBUF (SSPSR) REGISTER

```
LOOP    BTFSS   SSPSTAT, BF     ;Has data been received (transmit complete)?
        BRA     LOOP            ;No
        MOVF    SSPBUF, W       ;WREG reg = contents of SSPBUF
        MOVWF   RXDATA          ;Save in user RAM, if data is meaningful
        MOVF    TXDATA, W       ;W reg = contents of TXDATA
        MOVWF   SSPBUF          ;New data to xmit
```


© 2010 Microchip Technology Inc.

17.3.3 ENABLING SPI I/O

To enable the serial port, SSP Enable bit, SSPEN of the SSPCON1 register, must be set. To reset or reconfigure SPI mode, clear the SSPEN bit, reinitialize the SSPCON registers and then set the SSPEN bit. This configures the SDI, SDO, SCK and $\overline{SS}$ pins as serial port pins. For the pins to behave as the serial port function, some must have their data direction bits (in the TRIS register) appropriately programmed as follows:

- SDI is automatically controlled by the SPI module
- SDO must have corresponding TRIS bit cleared
- SCK (Master mode) must have corresponding TRIS bit cleared
- SCK (Slave mode) must have corresponding TRIS bit set
- $\overline{SS}$ must have corresponding TRIS bit set

Any serial port function that is not desired may be overridden by programming the corresponding data direction (TRIS) register to the opposite value.

17.3.4 TYPICAL CONNECTION

Figure 17-2 shows a typical connection between two microcontrollers. The master controller (Processor 1) initiates the data transfer by sending the SCK signal. Data is shifted out of both shift registers on their programmed clock edge and latched on the opposite edge of the clock. Both processors should be programmed to the same Clock Polarity (CKP), then both controllers would send and receive data at the same time. Whether the data is meaningful (or dummy data) depends on the application software. This leads to three scenarios for data transmission:

- Master sends data – Slave sends dummy data
- Master sends data – Slave sends data
- Master sends dummy data – Slave sends data

FIGURE 17-2: SPI MASTER/SLAVE CONNECTION

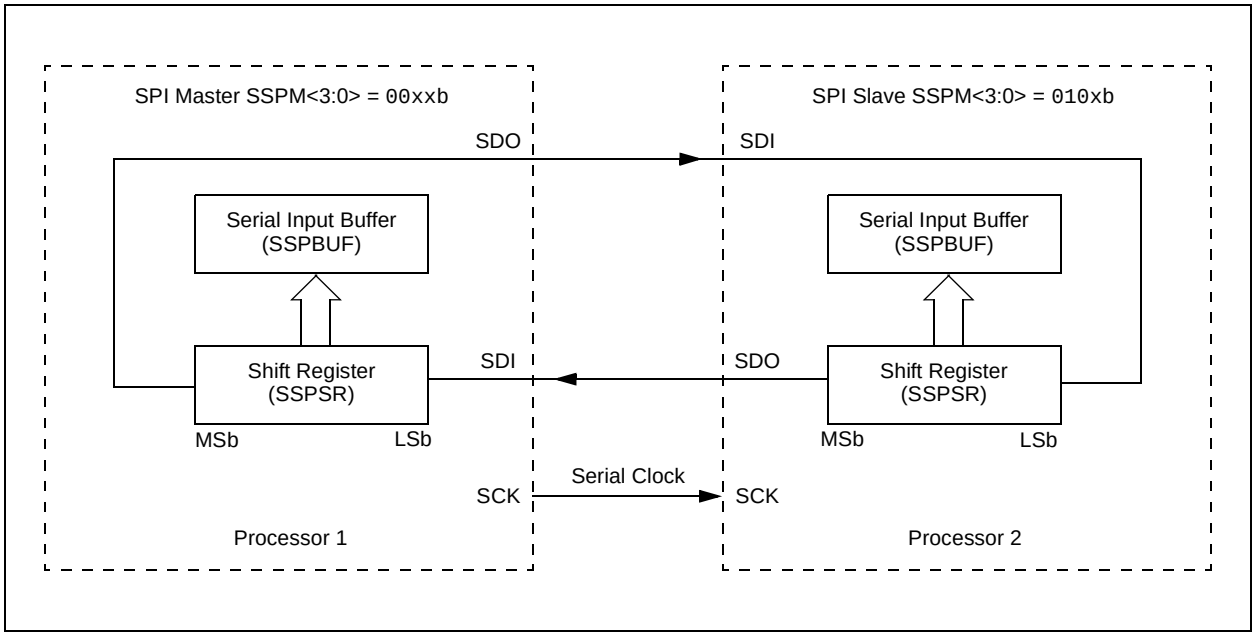

17.3.5 MASTER MODE

The master can initiate the data transfer at any time because it controls the SCK. The master determines when the slave (Processor 2, Figure 17-2) is to broadcast data by the software protocol.

In Master mode, the data is transmitted/received as soon as the SSPBUF register is written to. If the SPI is only going to receive, the SDO output could be disabled (programmed as an input). The SSPSR register will continue to shift in the signal present on the SDI pin at the programmed clock rate. As each byte is received, it will be loaded into the SSPBUF register as if a normal received byte (interrupts and Status bits appropriately set). This could be useful in receiver applications as a “Line Activity Monitor” mode.

The clock polarity is selected by appropriately programming the CKP bit of the SSPCON1 register. This then, would give waveforms for SPI communication as shown in Figure 17-3, Figure 17-5 and Figure 17-6, where the MSB is transmitted first. In Master mode, the SPI clock rate (bit rate) is user programmable to be one of the following:

- FOSC/4 (or TCY)
- FOSC/16 (or 4 • TCY)
- FOSC/64 (or 16 • TCY)
- Timer2 output/2

This allows a maximum data rate (at 64 MHz) of 16.00 Mbps.

Figure 17-3 shows the waveforms for Master mode. When the CKE bit is set, the SDO data is valid before there is a clock edge on SCK. The change of the input sample is shown based on the state of the SMP bit. The time when the SSPBUF is loaded with the received data is shown.

FIGURE 17-3: SPI MODE WAVEFORM (MASTER MODE)

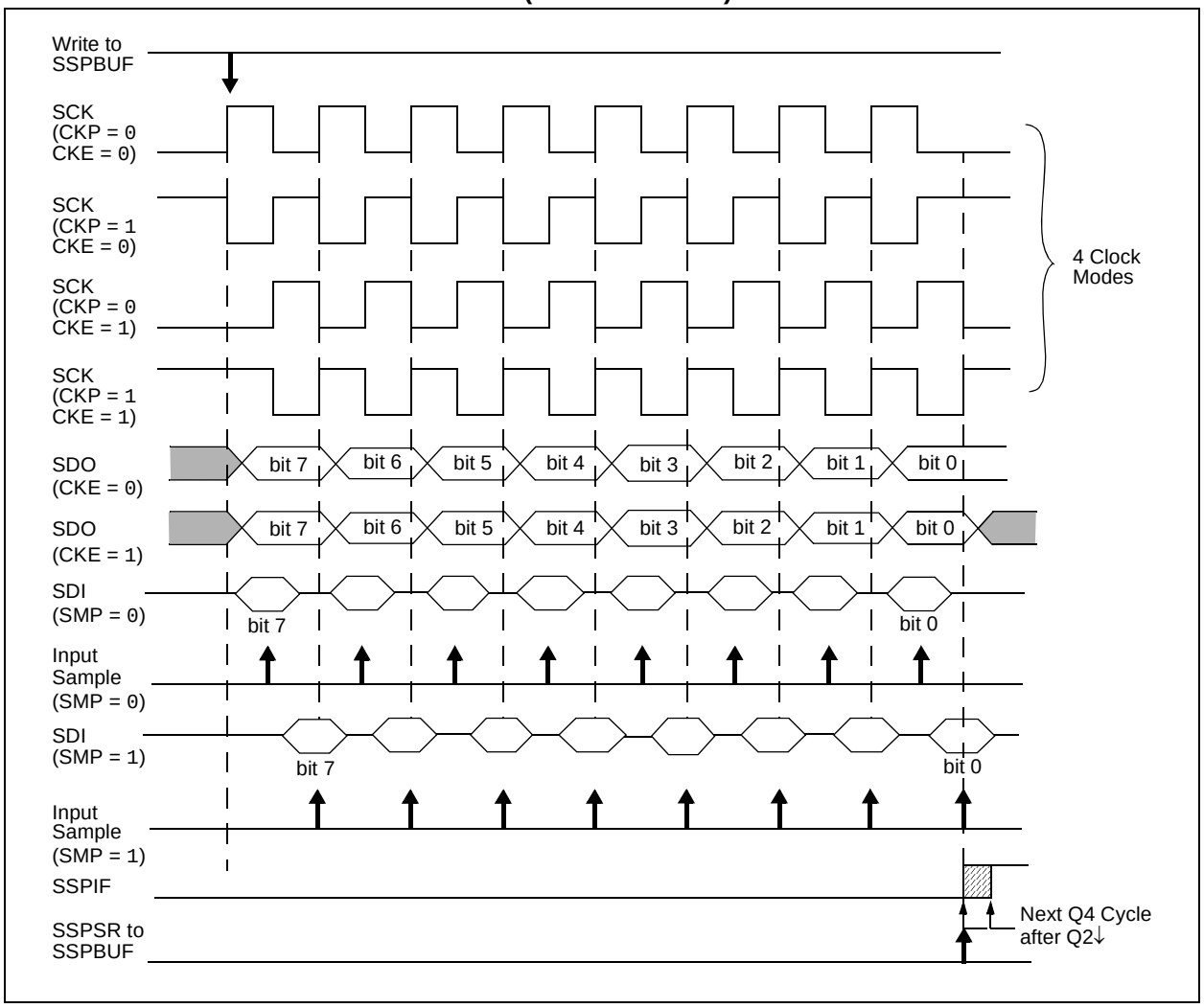

© 2010 Microchip Technology Inc.

17.3.6 SLAVE MODE

In Slave mode, the data is transmitted and received as the external clock pulses appear on SCK. When the last bit is latched, the SSPIF interrupt flag bit is set.

Before enabling the module in SPI Slave mode, the clock line must match the proper Idle state. The clock line can be observed by reading the SCK pin. The Idle state is determined by the CKP bit of the SSPCON1 register.

While in Slave mode, the external clock is supplied by the external clock source on the SCK pin. This external clock must meet the minimum high and low times as specified in the electrical specifications.

While in Sleep mode, the slave can transmit/receive data. When a byte is received, the device will wake-up from Sleep.

17.3.7 SLAVE SELECT SYNCHRONIZATION

The $\overline{SS}$ pin allows a Synchronous Slave mode. The SPI must be in Slave mode with $\overline{SS}$ pin control enabled (SSPCON1<3:0> = 04h). The pin must not be driven low for the $\overline{SS}$ pin to function as an input. The data latch must be high. When the $\overline{SS}$ pin is low, transmission and reception are enabled and the SDO pin is driven. When the $\overline{SS}$ pin goes high, the SDO pin is no longer driven, even if in the middle of a transmitted byte and becomes a floating output. External pull-up/pull-down resistors may be desirable depending on the application.

Note 1:	When the SPI is in Slave mode with $\overline{SS}$ pin control enabled (SSPCON<3:0> = 0100), the SPI module will reset if the $\overline{SS}$ pin is set to VDD.
2:	When the SPI is used in Slave mode with CKE set the $\overline{SS}$ pin control must also be enabled.

When the SPI module resets, the bit counter is forced to '0'. This can be done by either forcing the $\overline{SS}$ pin to a high level or clearing the SSPEN bit.

To emulate two-wire communication, the SDO pin can be connected to the SDI pin. When the SPI needs to operate as a receiver, the SDO pin can be configured as an input. This disables transmissions from the SDO. The SDI can always be left as an input (SDI function) since it cannot create a bus conflict.

FIGURE 17-4: SLAVE SYNCHRONIZATION WAVEFORM

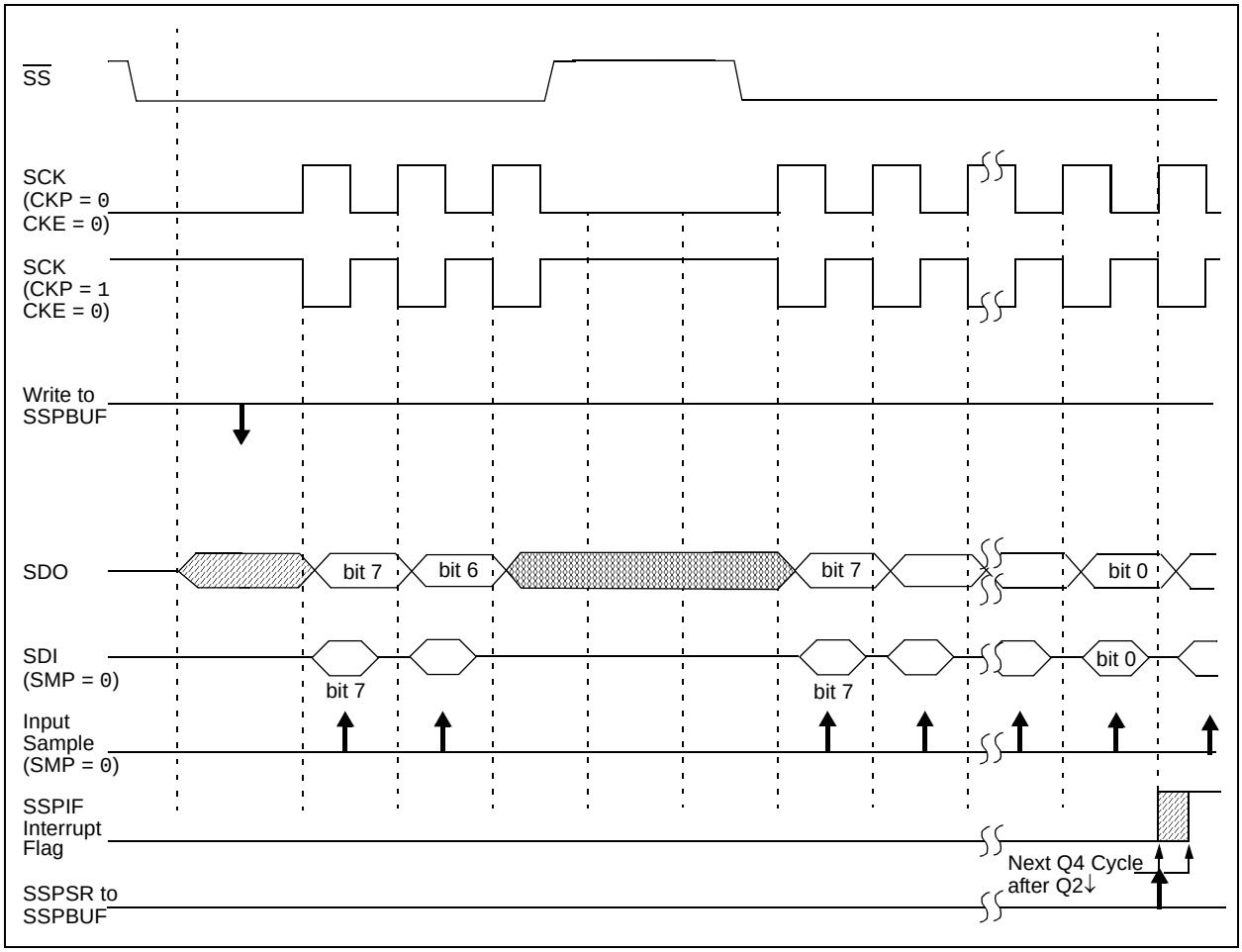

FIGURE 17-5: SPI MODE WAVEFORM (SLAVE MODE WITH CKE = 0)

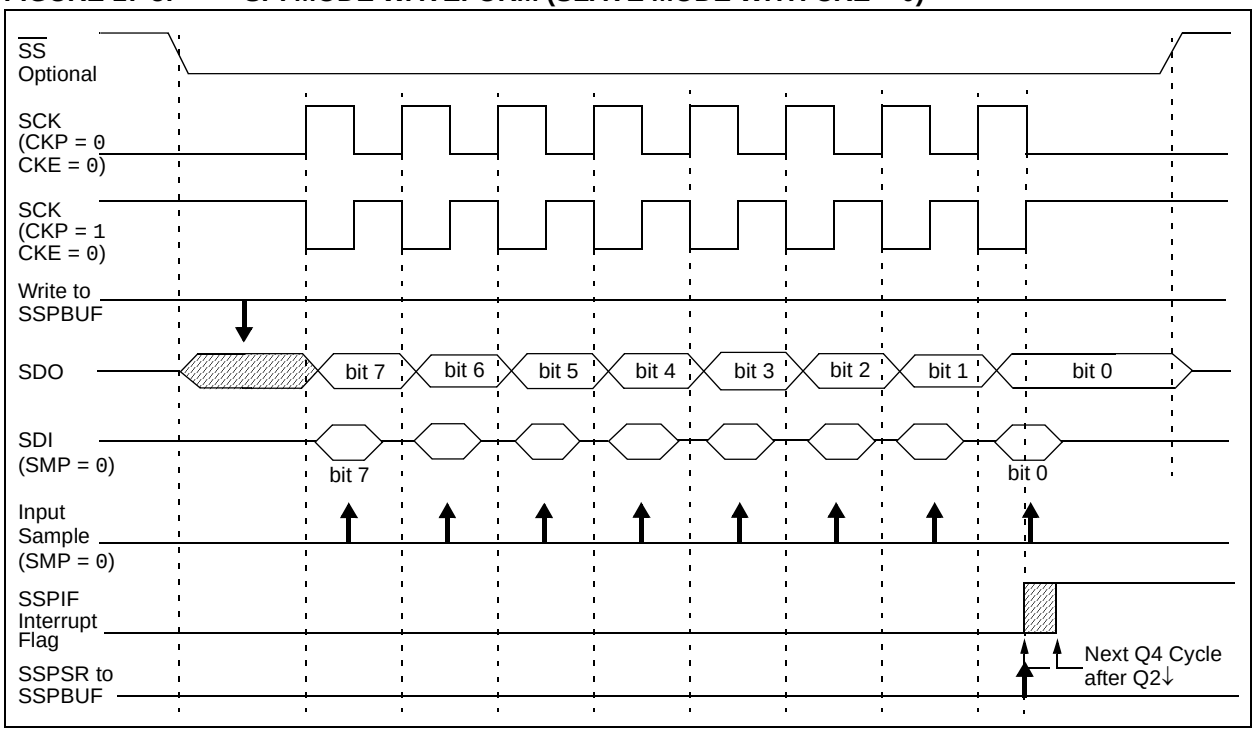

FIGURE 17-6: SPI MODE WAVEFORM (SLAVE MODE WITH CKE = 1)

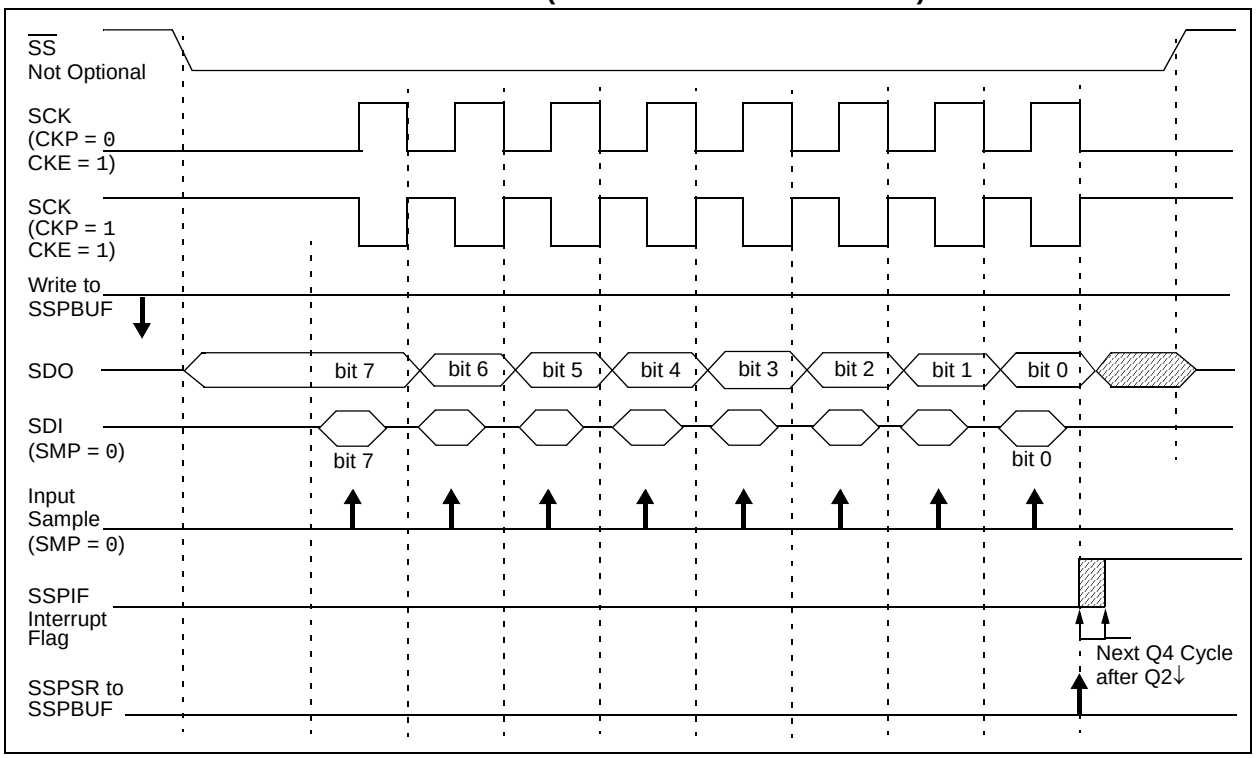

© 2010 Microchip Technology Inc.

17.3.8 OPERATION IN POWER-MANAGED MODES

In SPI Master mode, module clocks may be operating at a different speed than when in full power mode; in the case of the Sleep mode, all clocks are halted.

In all Idle modes, a clock is provided to the peripherals. That clock could be from the primary clock source, the secondary clock (Timer1 oscillator at 32.768 kHz) or the INTOSC source. See **Section 3.0 "Power-Managed Modes"** for additional information.

In most cases, the speed that the master clocks SPI data is not important; however, this should be evaluated for each system.

When MSSP interrupts are enabled, after the master completes sending data, an MSSP interrupt will wake the controller:

- from Sleep, in slave mode
- from Idle, in slave or master mode

If an exit from Sleep or Idle mode is not desired, MSSP interrupts should be disabled.

In SPI master mode, when the Sleep mode is selected, all module clocks are halted and the transmission/reception will remain in that state until the devices wakes. After the device returns to Run mode, the module will resume transmitting and receiving data.

In SPI Slave mode, the SPI Transmit/Receive Shift register operates asynchronously to the device. This allows the device to be placed in any power-managed mode and data to be shifted into the SPI Transmit/Receive Shift register. When all 8 bits have been received, the MSSP interrupt flag bit will be set and if enabled, will wake the device.

17.3.9 EFFECTS OF A RESET

A Reset disables the MSSP module and terminates the current transfer.

17.3.10 BUS MODE COMPATIBILITY

Table 17-1 shows the compatibility between the standard SPI modes and the states of the CKP and CKE control bits.

TABLE 17-1: SPI BUS MODES

Standard SPI Mode Terminology	Control Bits State	
	CKP	CKE
0, 0	0	1
0, 1	0	0
1, 0	1	1
1, 1	1	0

There is also an SMP bit which controls when the data is sampled.

TABLE 17-2: REGISTERS ASSOCIATED WITH SPI OPERATION

Name	Bit 7	Bit 6	Bit 5	Bit 4	Bit 3	Bit 2	Bit 1	Bit 0	Reset Values on page
INTCON	GIE/GIEH	PEIE/GIEL	TMR0IE	INT0IE	RBIE	TMR0IF	INT0IF	RBIF	59
PIR1	PSPIF(1)	ADIF	RCIF	TXIF	SSPIF	CCP1IF	TMR2IF	TMR1IF	62
PIE1	PSPIE(1)	ADIE	RCIE	TXIE	SSPIE	CCP1IE	TMR2IE	TMR1IE	62
IPR1	PSPIP(1)	ADIP	RCIP	TXIP	SSPIP	CCP1IP	TMR2IP	TMR1IP	62
TRISA	TRISA7(2)	TRISA6(2)	TRISA5	TRISA4	TRISA3	TRISA2	TRISA1	TRISA0	62
TRISC	TRISC7	TRISC6	TRISC5	TRISC4	TRISC3	TRISC2	TRISC1	TRISC0	62
SSPBUF	SSP Receive Buffer/Transmit Register								60
SSPCON1	WCOL	SSPOV	SSPEN	CKP	SSPM3	SSPM2	SSPM1	SSPM0	60
SSPSTAT	SMP	CKE	D/$\overline{A}$	P	S	R/$\overline{W}$	UA	BF	60

Legend: Shaded cells are not used by the MSSP in SPI mode.

Note 1: These bits are unimplemented in 28-pin devices; always maintain these bits clear.

2: PORTA<7:6> and their direction bits are individually configured as port pins based on various primary oscillator modes. When disabled, these bits read as '0'.

17.4 I²C Mode

The MSSP module in I²C mode fully implements all master and slave functions (including general call support) and provides interrupts on Start and Stop bits in hardware to determine a free bus (multi-master function). The MSSP module implements the standard mode specifications as well as 7-bit and 10-bit addressing.

Two pins are used for data transfer:

- Serial clock (SCL) – SCK/SCL
- Serial data (SDA) – SDI/SDA

The user must configure these pins as inputs with the corresponding TRIS bits.

FIGURE 17-7: MSSP BLOCK DIAGRAM (I²C™ MODE)

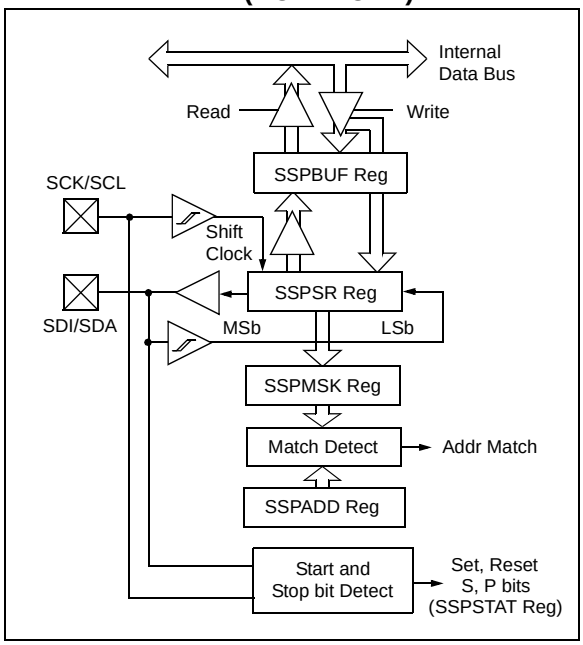

17.4.1 REGISTERS

The MSSP module has seven registers for I²C operation. These are:

- MSSP Control Register 1 (SSPCON1)
- MSSP Control Register 2 (SSPCON2)
- MSSP STATUS register (SSPSTAT)
- Serial Receive/Transmit Buffer Register (SSPBUF)
- MSSP Shift Register (SSPSR) – Not directly accessible
- MSSP Address Register (SSPADD)
- MSSP Address Mask (SSPMSK)

SSPCON1, SSPCON2 and SSPSTAT are the control and STATUS registers in I²C mode operation. The SSPCON1 and SSPCON2 registers are readable and writable. The lower 6 bits of the SSPSTAT are read-only. The upper two bits of the SSPSTAT are read/write.

SSPSR is the shift register used for shifting data in or out. SSPBUF is the buffer register to which data bytes are written to or read from.

When the SSP is configured in Master mode, the lower seven bits of SSPADD act as the Baud Rate Generator reload value. When the SSP is configured for I²C slave mode the SSPADD register holds the slave device address. The SSP can be configured to respond to a range of addresses by qualifying selected bits of the address register with the SSPMSK register.

In receive operations, SSPSR and SSPBUF together create a double-buffered receiver. When SSPSR receives a complete byte, it is transferred to SSPBUF and the SSPIF interrupt is set.

During transmission, the SSPBUF is not double-buffered. A write to SSPBUF will write to both SSPBUF and SSPSR.

© 2010 Microchip Technology Inc.

REGISTER 17-3: SSPADD: MSSP ADDRESS AND BAUD RATE REGISTER (I^2C MODE)

R/W-0	R/W-0	R/W-0	R/W-0	R/W-0	R/W-0	R/W-0	R/W-0
ADD7	ADD6	ADD5	ADD4	ADD3	ADD2	ADD1	ADD0
bit 7							bit 0

Legend:			
R = Readable bit	W = Writable bit	U = Unimplemented bit, read as '0'	
-n = Value at POR	'1' = Bit is set	'0' = Bit is cleared	x = Bit is unknown

Master mode

bit 7-0 **ADD<7:0>:** Baud Rate Clock Divider bits
SCL pin clock period = ((ADD<7:0> + 1) *4)/FOSC

10-Bit Slave mode: Most significant address byte

bit 7-3 Not used: Unused for most significant address byte. Bit state of this register is a don't care. Bit pattern sent by master is fixed by I^2C specification and must be equal to '11110'. However, those bits are compared by hardware and are not affected by the value in this register.

bit 2-1 **ADD<9:8>**: Two most significant bits of 10-bit address

bit 0 **Not used**: Unused in this mode. Bit state is a "don't care".

10-Bit Slave mode: Least significant address byte

bit 7-0 **ADD<7:0>**: Eight least significant bits of 10-bit address

7-Bit Slave mode

bit 7-1 **ADD<7:1>:** 7-bit address

bit 0 **Not used**: Unused in this mode. Bit state is a "don't care".

REGISTER 17-4: SSPSTAT: MSSP STATUS REGISTER (I^2C MODE)

R/W-0	R/W-0	R-0	R-0	R-0	R-0	R-0	R-0
SMP	CKE	D/$\overline{A}$	P(1)	S(1)	R/$\overline{W}$(2, 3)	UA	BF
bit 7							bit 0

Legend:			
R = Readable bit	W = Writable bit	U = Unimplemented bit, read as '0'	
-n = Value at POR	'1' = Bit is set	'0' = Bit is cleared	x = Bit is unknown

bit 7 **SMP:** Slew Rate Control bit
In Master or Slave mode:
1 = Slew rate control disabled for standard speed mode (100 kHz and 1 MHz)
0 = Slew rate control enabled for high-speed mode (400 kHz)

bit 6 **CKE:** SMBus Select bit
In Master or Slave mode:
1 = Enable SMBus specific inputs
0 = Disable SMBus specific inputs

bit 5 **D/$\overline{A}$:** Data/$\overline{Address}$ bit
In Master mode:
Reserved.
In Slave mode:
1 = Indicates that the last byte received or transmitted was data
0 = Indicates that the last byte received or transmitted was address

bit 4 **P:** Stop bit(1)
1 = Indicates that a Stop bit has been detected last
0 = Stop bit was not detected last

bit 3 **S:** Start bit(1)
1 = Indicates that a Start bit has been detected last
0 = Start bit was not detected last

bit 2 **R/$\overline{W}$:** Read/$\overline{Write}$ Information bit (I^2C mode only)(2, 3)
In Slave mode:
1 = Read
0 = Write
In Master mode:
1 = Transmit is in progress
0 = Transmit is not in progress

bit 1 **UA:** Update Address bit (10-bit Slave mode only)
1 = Indicates that the user needs to update the address in the SSPADD register
0 = Address does not need to be updated

bit 0 **BF:** Buffer Full Status bit
In Transmit mode:
1 = SSPBUF is full
0 = SSPBUF is empty
In Receive mode:
1 = SSPBUF is full (does not include the $\overline{ACK}$ and Stop bits)
0 = SSPBUF is empty (does not include the $\overline{ACK}$ and Stop bits)

Note 1: This bit is cleared on Reset and when SSPEN is cleared.
2: This bit holds the R/$\overline{W}$ bit information following the last address match. This bit is only valid from the address match to the next Start bit, Stop bit or not $\overline{ACK}$ bit.
3: ORing this bit with SEN, RSEN, PEN, RCEN or ACKEN will indicate if the MSSP is in Active mode.

© 2010 Microchip Technology Inc.

REGISTER 17-5: SSPCON1: MSSP CONTROL 1 REGISTER (I^2C MODE)

R/W-0	R/W-0	R/W-0	R/W-0	R/W-0	R/W-0	R/W-0	R/W-0
WCOL	SSPOV	SSPEN	CKP	SSPM3	SSPM2	SSPM1	SSPM0
bit 7							bit 0

Legend:			
R = Readable bit	W = Writable bit	U = Unimplemented bit, read as '0'	
-n = Value at POR	'1' = Bit is set	'0' = Bit is cleared	x = Bit is unknown

bit 7 **WCOL:** Write Collision Detect bit

In Master Transmit mode:
1 = A write to the SSPBUF register was attempted while the I^2C conditions were not valid for a transmission to be started (must be cleared by software)
0 = No collision

In Slave Transmit mode:
1 = The SSPBUF register is written while it is still transmitting the previous word (must be cleared by software)
0 = No collision

In Receive mode (Master or Slave modes):
This is a "don't care" bit.

bit 6 **SSPOV:** Receive Overflow Indicator bit

In Receive mode:
1 = A byte is received while the SSPBUF register is still holding the previous byte (must be cleared by software)
0 = No overflow

In Transmit mode:
This is a "don't care" bit in Transmit mode.

bit 5 **SSPEN:** Synchronous Serial Port Enable bit

1 = Enables the serial port and configures the SDA and SCL pins as the serial port pins. When enabled, the SDA and SCL pins must be configured as inputs.
0 = Disables serial port and configures these pins as I/O port pins

bit 4 **CKP:** SCK Release Control bit

In Slave mode:
1 = Release clock
0 = Holds clock low (clock stretch), used to ensure data setup time

In Master mode:
Unused in this mode.

bit 3-0 **SSPM<3:0>:** Synchronous Serial Port Mode Select bits

1111 = I^2C Slave mode, 10-bit address with Start and Stop bit interrupts enabled
1110 = I^2C Slave mode, 7-bit address with Start and Stop bit interrupts enabled
1011 = I^2C Firmware Controlled Master mode (Slave Idle)
1000 = I^2C Master mode, clock = FOSC/(4 * (SSPADD + 1))
0111 = I^2C Slave mode, 10-bit address
0110 = I^2C Slave mode, 7-bit address
Bit combinations not specifically listed here are either reserved or implemented in SPI mode only.

REGISTER 17-6: SSPCON2: MSSP CONTROL REGISTER (I^2C MODE)

R/W-0	R/W-0	R/W-0	R/W-0	R/W-0	R/W-0	R/W-0	R/W-0
GCEN	ACKSTAT	ACKDT(2)	ACKEN(1)	RCEN(1)	PEN(1)	RSEN(1)	SEN(1)
bit 7							bit 0

Legend:			
R = Readable bit	W = Writable bit	U = Unimplemented bit, read as '0'	
-n = Value at POR	'1' = Bit is set	'0' = Bit is cleared	x = Bit is unknown

bit 7 **GCEN:** General Call Enable bit (Slave mode only)
1 = Generate interrupt when a general call address (0000h) is received in the SSPSR
0 = General call address disabled

bit 6 **ACKSTAT:** Acknowledge Status bit (Master Transmit mode only)
1 = Acknowledge was not received from slave
0 = Acknowledge was received from slave

bit 5 **ACKDT:** Acknowledge Data bit (Master Receive mode only)(2)
1 = Not Acknowledge
0 = Acknowledge

bit 4 **ACKEN:** Acknowledge Sequence Enable bit (Master Receive mode only)(1)
1 = Initiate Acknowledge sequence on SDA and SCL pins and transmit ACKDT data bit. Automatically cleared by hardware.
0 = Acknowledge sequence Idle

bit 3 **RCEN:** Receive Enable bit (Master mode only)(1)
1 = Enables Receive mode for I^2C
0 = Receive Idle

bit 2 **PEN:** Stop Condition Enable bit (Master mode only)(1)
1 = Initiate Stop condition on SDA and SCL pins. Automatically cleared by hardware.
0 = Stop condition Idle

bit 1 **RSEN:** Repeated Start Condition Enable bit (Master mode only)(1)
1 = Initiate Repeated Start condition on SDA and SCL pins. Automatically cleared by hardware.
0 = Repeated Start condition Idle

bit 0 **SEN:** Start Condition Enable/Stretch Enable bit(1)
In Master mode:
1 = Initiate Start condition on SDA and SCL pins. Automatically cleared by hardware.
0 = Start condition Idle
In Slave mode:
1 = Clock stretching is enabled for both slave transmit and slave receive (stretch enabled)
0 = Clock stretching is disabled for slave received. Slave transmit clock stretching remains enabled.

Note 1: For bits ACKEN, RCEN, PEN, RSEN, SEN: If the I^2C module is not in the Idle mode, these bits may not be set (no spooling) and the SSPBUF may not be written (or writes to the SSPBUF are disabled).
2: Value that will be transmitted when the user initiates an Acknowledge sequence at the end of a receive.

© 2010 Microchip Technology Inc.

17.4.2 OPERATION

The MSSP module functions are enabled by setting SSPEN bit of the SSPCON1 register.

The SSPCON1 register allows control of the I^2C operation. Four mode selection bits of the SSPCON1 register allow one of the following I^2C modes to be selected:

- I^2C Master mode, clock = (FOSC/(4 x (SSPADD + 1))
- I^2C Slave mode (7-bit address)
- I^2C Slave mode (10-bit address)
- I^2C Slave mode (7-bit address) with Start and Stop bit interrupts enabled
- I^2C Slave mode (10-bit address) with Start and Stop bit interrupts enabled
- I^2C Firmware Controlled Master mode, slave is Idle

Selection of any I^2C mode with the SSPEN bit set, forces the SCL and SDA pins to be open-drain, provided these pins are programmed to inputs by setting the appropriate TRIS bits. To ensure proper operation of the module, pull-up resistors must be provided externally to the SCL and SDA pins.

17.4.3 SLAVE MODE

In Slave mode, the SCL and SDA pins must be configured as inputs. The MSSP module will override the input state with the output data when required (slave-transmitter).

The I^2C Slave mode hardware will always generate an interrupt on an address match. Through the mode select bits, the user can also choose to interrupt on Start and Stop bits

When an address is matched, or the data transfer after an address match is received, the hardware automatically will generate the Acknowledge ($\overline{ACK}$) pulse and load the SSPBUF register with the received value currently in the SSPSR register.

Any combination of the following conditions will cause the MSSP module not to give this $\overline{ACK}$ pulse:

- The Buffer Full bit, BF bit of the SSPSTAT register, is set before the transfer is received.
- The overflow bit, SSPOV bit of the SSPCON1 register, is set before the transfer is received.

In this case, the SSPSR register value is not loaded into the SSPBUF, but bit SSPIF of the PIR1 register is set. The BF bit is cleared by reading the SSPBUF register, while bit SSPOV is cleared through software.

The SCL clock input must have a minimum high and low for proper operation. The high and low times of the I^2C specification, as well as the requirement of the MSSP module, are shown in timing parameter 100 and parameter 101 (See Table 26-19).

17.4.3.1 Addressing

Once the MSSP module has been enabled, it waits for a Start condition to occur. Following the Start condition, the 8 bits are shifted into the SSPSR register. All incoming bits are sampled with the rising edge of the clock (SCL) line. The value of register SSPSR<7:1> is compared to the value of the SSPADD register. The address is compared on the falling edge of the eighth clock (SCL) pulse. If the addresses match and the BF and SSPOV bits are clear, the following events occur:

1. The SSPSR register value is loaded into the SSPBUF register.
2. The Buffer Full bit, BF, is set.
3. An $\overline{ACK}$ pulse is generated.
4. MSSP Interrupt Flag bit, SSPIF of the PIR1 register, is set (interrupt is generated, if enabled) on the falling edge of the ninth SCL pulse.

In 10-bit Address mode, two address bytes need to be received by the slave. The five Most Significant bits (MSbs) of the first address byte specify if this is a 10-bit address. Bit R/$\overline{W}$ of the SSPSTAT register must specify a write so the slave device will receive the second address byte. For a 10-bit address, the first byte would equal '11110 A9 A8 0', where 'A9' and 'A8' are the two MSbs of the address. The sequence of events for 10-bit address is as follows, with steps 7 through 9 for the slave-transmitter:

1. Receive first (high) byte of address (bits SSPIF, BF and UA (of the SSPSTAT register are set).
2. Update the SSPADD register with second (low) byte of address (clears bit UA and releases the SCL line).
3. Read the SSPBUF register (clears bit BF) and clear flag bit, SSPIF.
4. Receive second (low) byte of address (bits SSPIF, BF and UA are set). If the address matches then the SCL is held until the next step. Otherwise the SCL line is not held.
5. Update the SSPADD register with the first (high) byte of address. (This will clear bit UA and release a held SCL line.)
6. Read the SSPBUF register (clears bit BF) and clear flag bit, SSPIF.
7. Receive Repeated Start condition.
8. Receive first (high) byte of address (bits SSPIF and BF are set).
9. Read the SSPBUF register (clears bit BF) and clear flag bit, SSPIF.

17.4.3.2 Reception

When the R/$\overline{W}$ bit of the address byte is clear and an address match occurs, the R/$\overline{W}$ bit of the SSPSTAT register is cleared. The received address is loaded into the SSPBUF register and the SDA line is held low ($\overline{ACK}$).

When the address byte overflow condition exists, then the no Acknowledge ($\overline{ACK}$) pulse is given. An overflow condition is defined as either bit BF bit of the SSPSTAT register is set, or bit SSPOV bit of the SSPCON1 register is set.

An MSSP interrupt is generated for each data transfer byte. Flag bit, SSPIF of the PIR1 register, must be cleared by software. The SSPSTAT register is used to determine the status of the byte.

When the SEN bit of the SSPCON2 register is set, SCK/SCL will be held low (clock stretch) following each data transfer. The clock must be released by setting the CKP bit of the SSPCON1 register. See **Section 17.4.4 "Clock Stretching"** for more detail.

17.4.3.3 Transmission

When the R/$\overline{W}$ bit of the incoming address byte is set and an address match occurs, the R/$\overline{W}$ bit of the SSPSTAT register is set. The received address is loaded into the SSPBUF register. The $\overline{ACK}$ pulse will be sent on the ninth bit and pin SCK/SCL is held low regardless of SEN (see **Section 17.4.4 "Clock Stretching"** for more detail). By stretching the clock, the master will be unable to assert another clock pulse until the slave is done preparing the transmit data. The transmit data must be loaded into the SSPBUF register which also loads the SSPSR register. Then pin SCK/SCL should be enabled by setting the CKP bit of the SSPCON1 register. The eight data bits are shifted out on the falling edge of the SCL input. This ensures that the SDA signal is valid during the SCL high time (Figure 17-9).

The $\overline{ACK}$ pulse from the master-receiver is latched on the rising edge of the ninth SCL input pulse. If the SDA line is high (not $\overline{ACK}$), then the data transfer is complete. In this case, when the $\overline{ACK}$ is latched by the slave, the slave logic is reset (resets SSPSTAT register) and the slave monitors for another occurrence of the Start bit. If the SDA line was low ($\overline{ACK}$), the next transmit data must be loaded into the SSPBUF register. Again, pin SCK/SCL must be enabled by setting bit CKP.

An MSSP interrupt is generated for each data transfer byte. The SSPIF bit must be cleared by software and the SSPSTAT register is used to determine the status of the byte. The SSPIF bit is set on the falling edge of the ninth clock pulse.

© 2010 Microchip Technology Inc.

FIGURE 17-8: I²C™ SLAVE MODE TIMING WITH SEN = 0 (RECEPTION, 7-BIT ADDRESS)

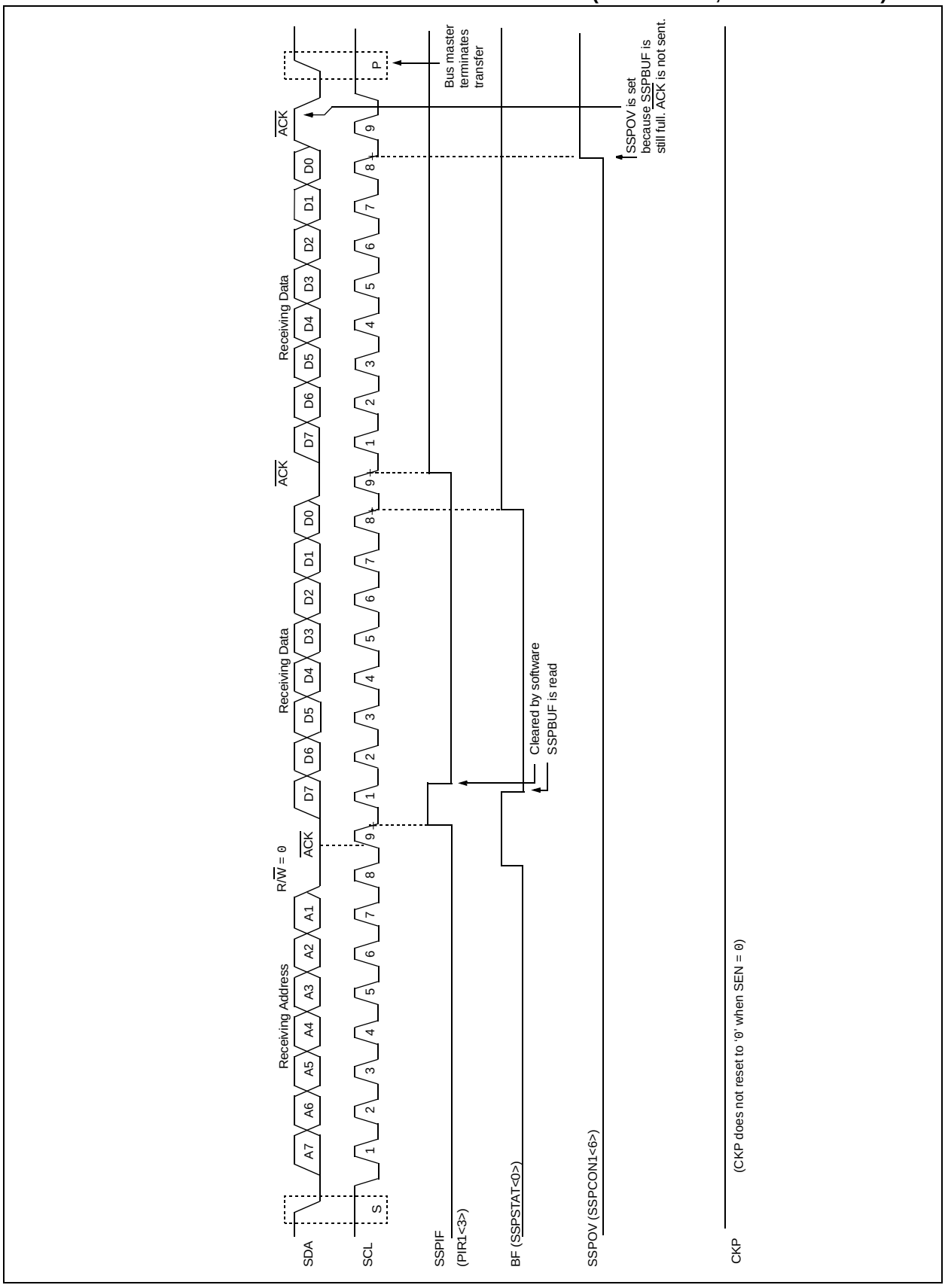

FIGURE 17-9: I²C™ SLAVE MODE TIMING (TRANSMISSION, 7-BIT ADDRESS)

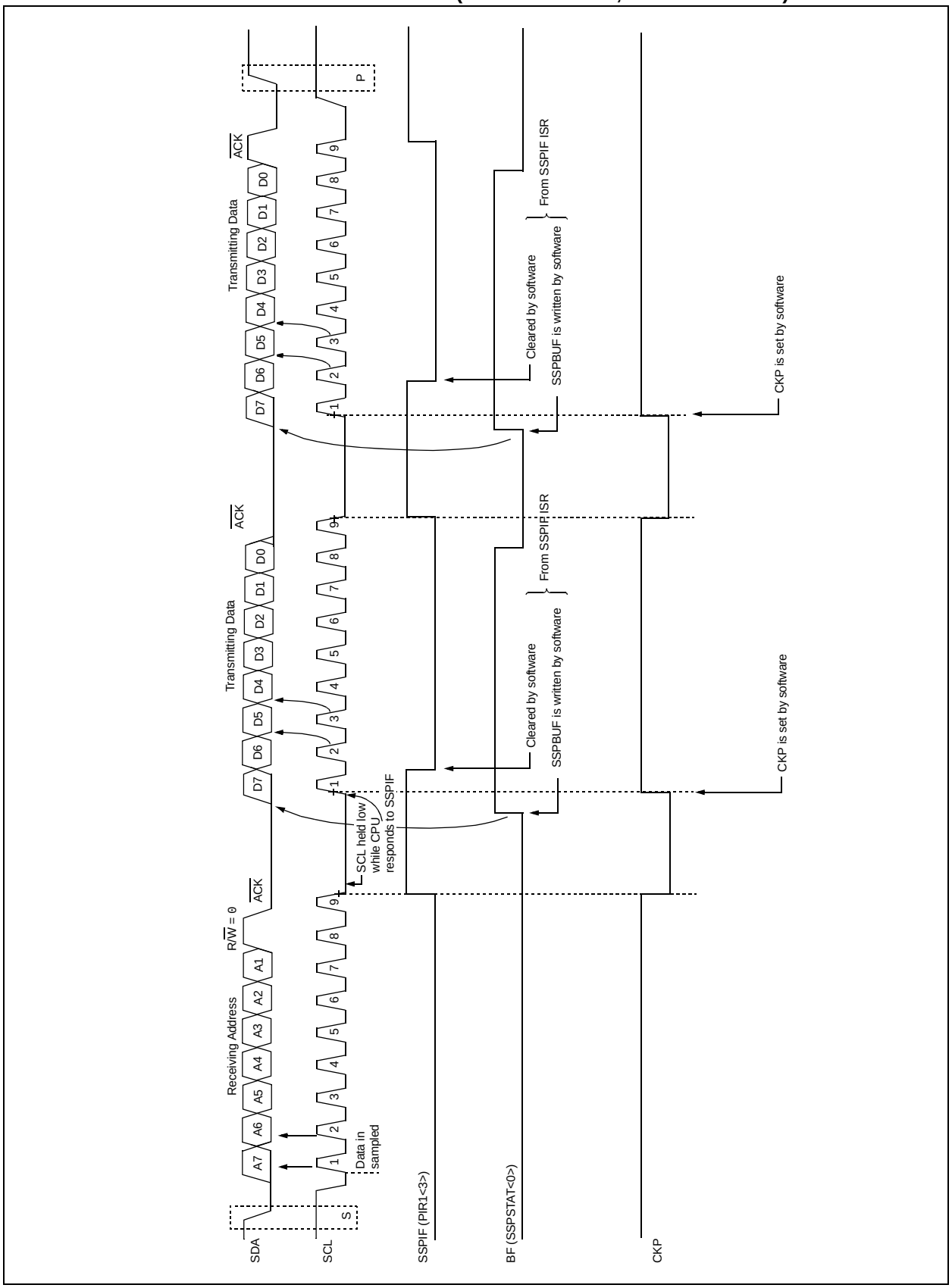

© 2010 Microchip Technology Inc.

FIGURE 17-10: I²C™ SLAVE MODE TIMING WITH SEN = 0 (RECEPTION, 10-BIT ADDRESS)

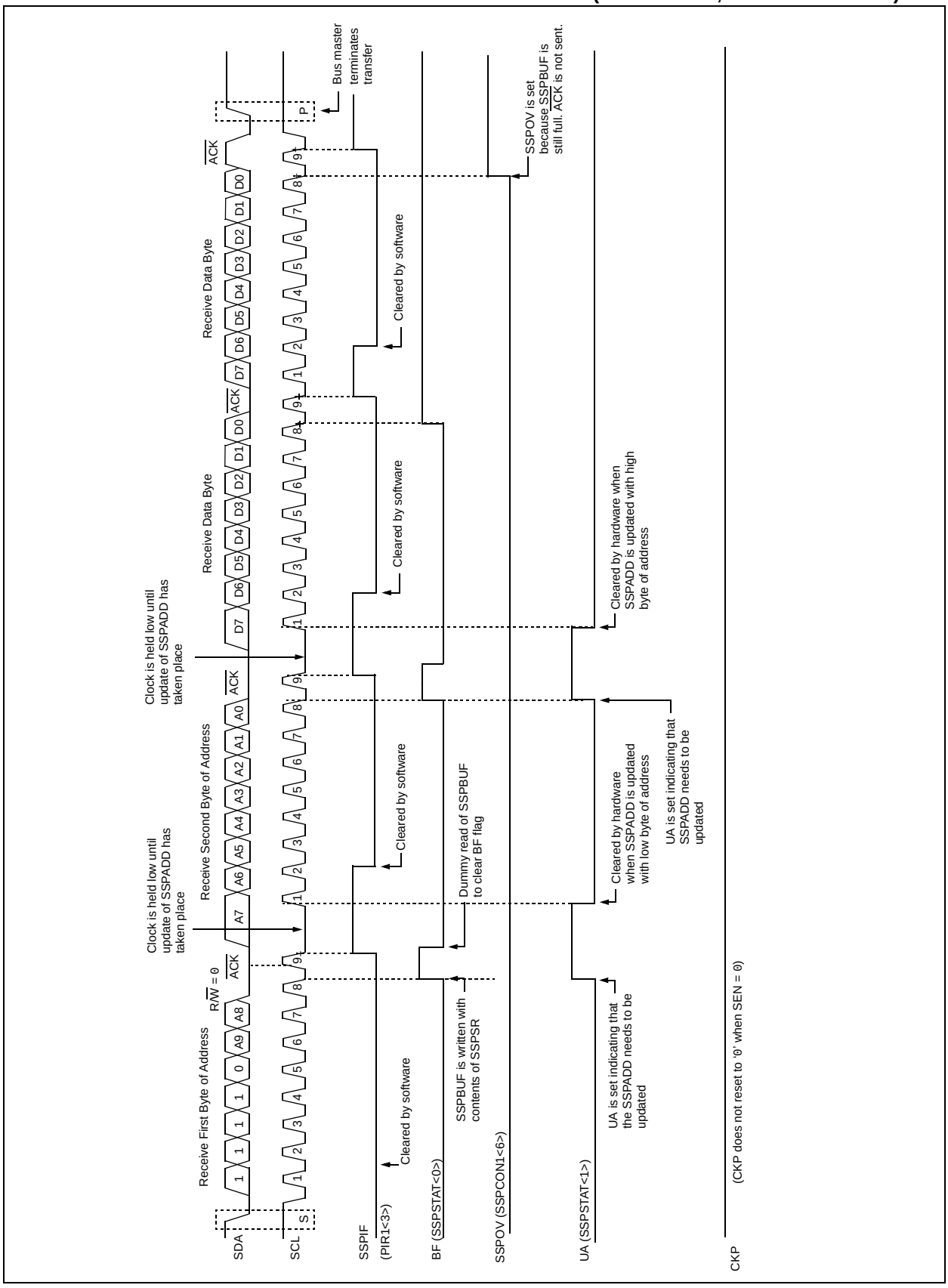

FIGURE 17-11: I²C™ SLAVE MODE TIMING (TRANSMISSION, 10-BIT ADDRESS)

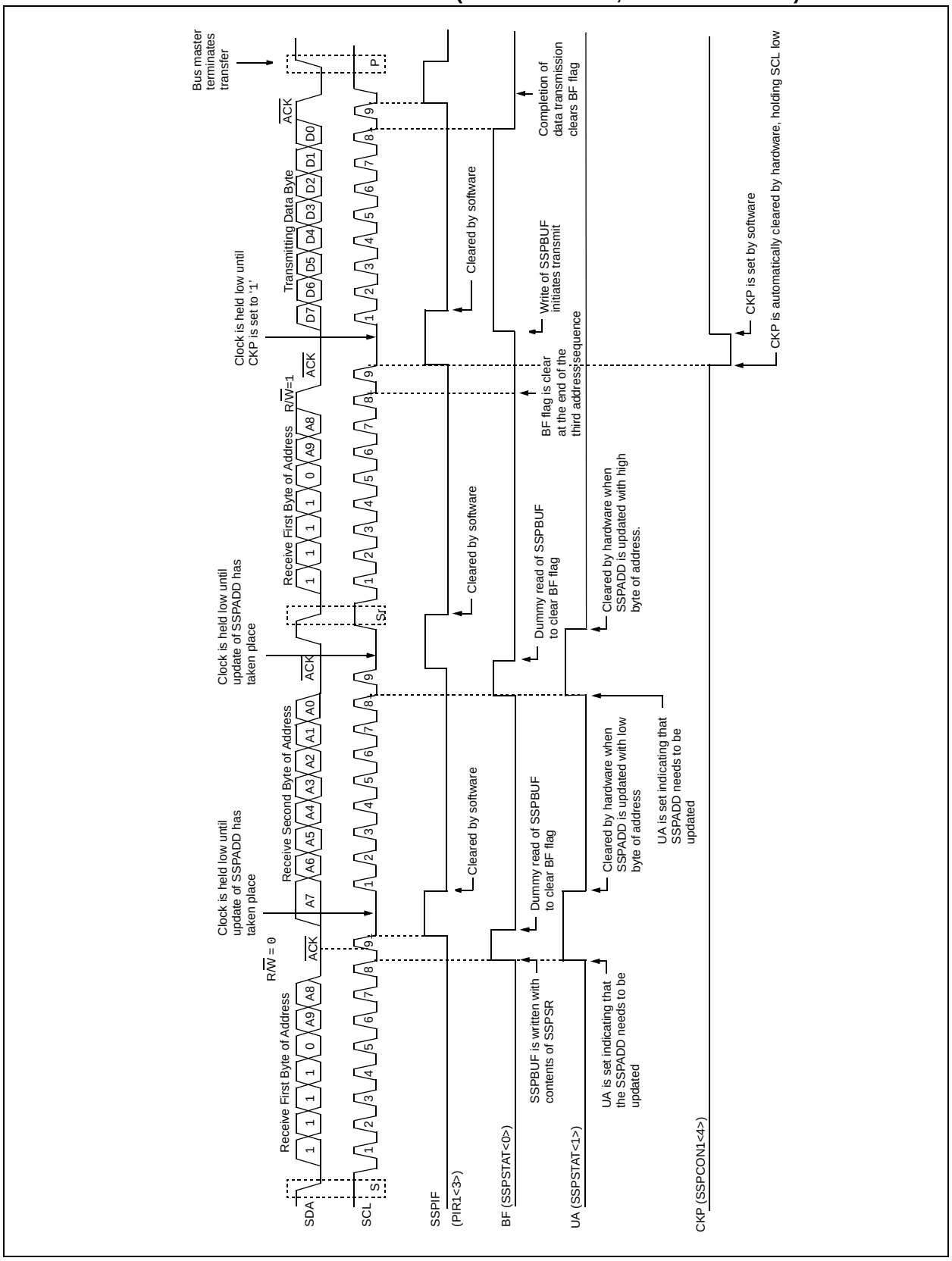

© 2010 Microchip Technology Inc.

17.4.3.4 SSP Mask Register

An SSP Mask (SSPMSK) register is available in I^2C Slave mode as a mask for the value held in the SSPSR register during an address comparison operation. A zero (‘0’) bit in the SSPMSK register has the effect of making the corresponding bit in the SSPSR register a “don’t care”.

This register is reset to all ‘1’s upon any Reset condition and, therefore, has no effect on standard SSP operation until written with a mask value.

This register must be initiated prior to setting SSPM<3:0> bits to select the I^2C Slave mode (7-bit or 10-bit address).

The SSP Mask register is active during:

- 7-bit Address mode: address compare of A<7:1>.
- 10-bit Address mode: address compare of A<7:0> only. The SSP mask has no effect during the reception of the first (high) byte of the address.

REGISTER 17-7: SSPMSK: SSP MASK REGISTER

R/W-1	R/W-1	R/W-1	R/W-1	R/W-1	R/W-1	R/W-1	R/W-1
MSK7	MSK6	MSK5	MSK4	MSK3	MSK2	MSK1	MSK0(1)
bit 7							bit 0

Legend:			
R = Readable bit	W = Writable bit	U = Unimplemented bit, read as ‘0’	
-n = Value at POR	‘1’ = Bit is set	‘0’ = Bit is cleared	x = Bit is unknown

bit 7-1 **MSK<7:1>:** Mask bits

1 = The received address bit n is compared to SSPADD<n> to detect I^2C address match
0 = The received address bit n is not used to detect I^2C address match

bit 0 **MSK<0>:** Mask bit for I^2C Slave mode, 10-bit Address(1)

I^2C Slave mode, 10-bit Address (SSPM<3:0> = 0111):
1 = The received address bit 0 is compared to SSPADD<0> to detect I^2C address match
0 = The received address bit 0 is not used to detect I^2C address match

Note 1: The MSK0 bit is used only in 10-bit slave mode. In all other modes, this bit has no effect.

17.4.4 CLOCK STRETCHING

Both 7-bit and 10-bit Slave modes implement automatic clock stretching during a transmit sequence.

The SEN bit of the SSPCON2 register allows clock stretching to be enabled during receives. Setting SEN will cause the SCL pin to be held low at the end of each data receive sequence.

17.4.4.1 Clock Stretching for 7-bit Slave Receive Mode (SEN = 1)

In 7-bit Slave Receive mode, on the falling edge of the ninth clock at the end of the ACK sequence if the BF bit is set, the CKP bit of the SSPCON1 register is automatically cleared, forcing the SCL output to be held low. The CKP being cleared to '0' will assert the SCL line low. The CKP bit must be set in the user's ISR before reception is allowed to continue. By holding the SCL line low, the user has time to service the ISR and read the contents of the SSPBUF before the master device can initiate another data transfer sequence. This will prevent buffer overruns from occurring (see Figure 17-13).

Note 1:	If the user reads the contents of the SSPBUF before the falling edge of the ninth clock, thus clearing the BF bit, the CKP bit will not be cleared and clock stretching will not occur.
2:	The CKP bit can be set by software regardless of the state of the BF bit. The user should be careful to clear the BF bit in the ISR before the next receive sequence in order to prevent an overflow condition.

17.4.4.2 Clock Stretching for 10-bit Slave Receive Mode (SEN = 1)

In 10-bit Slave Receive mode during the address sequence, clock stretching automatically takes place but CKP is not cleared. During this time, if the UA bit is set after the ninth clock, clock stretching is initiated. The UA bit is set after receiving the upper byte of the 10-bit address and following the receive of the second byte of the 10-bit address with the R/W bit cleared to '0'. The release of the clock line occurs upon updating SSPADD. Clock stretching will occur on each data receive sequence as described in 7-bit mode.

Note:	If the user polls the UA bit and clears it by updating the SSPADD register before the falling edge of the ninth clock occurs and if the user hasn't cleared the BF bit by reading the SSPBUF register before that time, then the CKP bit will still NOT be asserted low. Clock stretching on the basis of the state of the BF bit only occurs during a data sequence, not an address sequence.

17.4.4.3 Clock Stretching for 7-bit Slave Transmit Mode

7-bit Slave Transmit mode implements clock stretching by clearing the CKP bit after the falling edge of the ninth clock if the BF bit is clear. This occurs regardless of the state of the SEN bit.

The user's ISR must set the CKP bit before transmission is allowed to continue. By holding the SCL line low, the user has time to service the ISR and load the contents of the SSPBUF before the master device can initiate another data transfer sequence (see Figure 17-9).

Note 1:	If the user loads the contents of SSPBUF, setting the BF bit before the falling edge of the ninth clock, the CKP bit will not be cleared and clock stretching will not occur.
2:	The CKP bit can be set by software regardless of the state of the BF bit.

17.4.4.4 Clock Stretching for 10-bit Slave Transmit Mode

In 10-bit Slave Transmit mode, clock stretching is controlled during the first two address sequences by the state of the UA bit, just as it is in 10-bit Slave Receive mode. The first two addresses are followed by a third address sequence which contains the high-order bits of the 10-bit address and the R/W bit set to '1'. After the third address sequence is performed, the UA bit is not set, the module is now configured in Transmit mode and clock stretching is controlled by the BF flag as in 7-bit Slave Transmit mode (see Figure 17-11).

© 2010 Microchip Technology Inc.

17.4.4.5 Clock Synchronization and the CKP bit

When the CKP bit is cleared, the SCL output is forced to '0'. However, clearing the CKP bit will not assert the SCL output low until the SCL output is already sampled low. Therefore, the CKP bit will not assert the SCL line until an external I^2C master device has already asserted the SCL line. The SCL output will remain low until the CKP bit is set and all other devices on the I^2C bus have deasserted SCL. This ensures that a write to the CKP bit will not violate the minimum high time requirement for SCL (see Figure 17-12).

FIGURE 17-12: CLOCK SYNCHRONIZATION TIMING

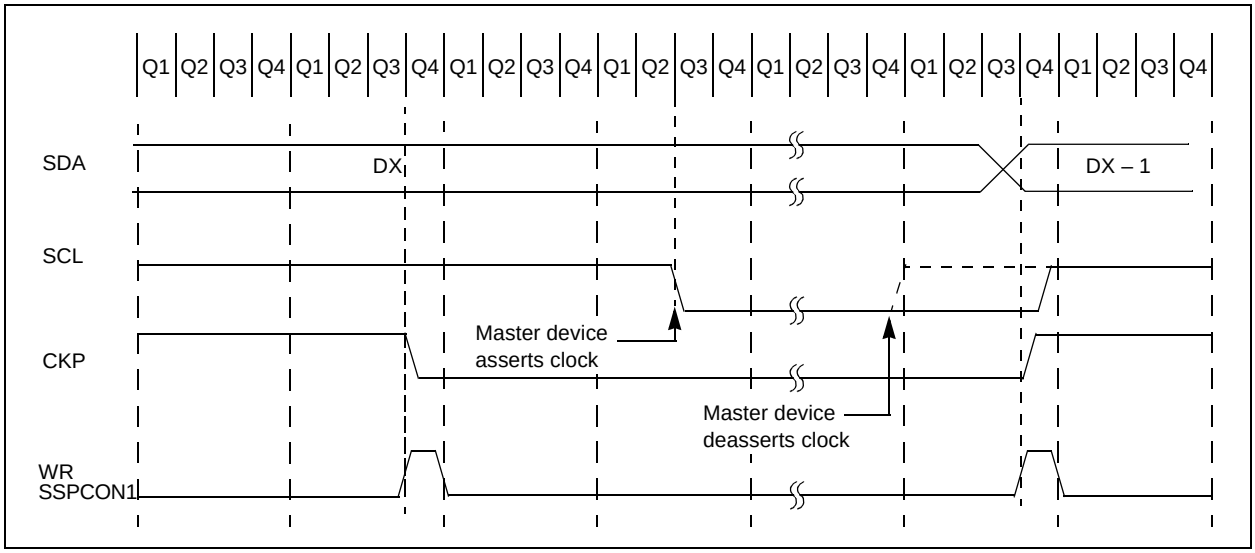

FIGURE 17-13: I^2C™ SLAVE MODE TIMING WITH SEN = 1 (RECEPTION, 7-BIT ADDRESS)

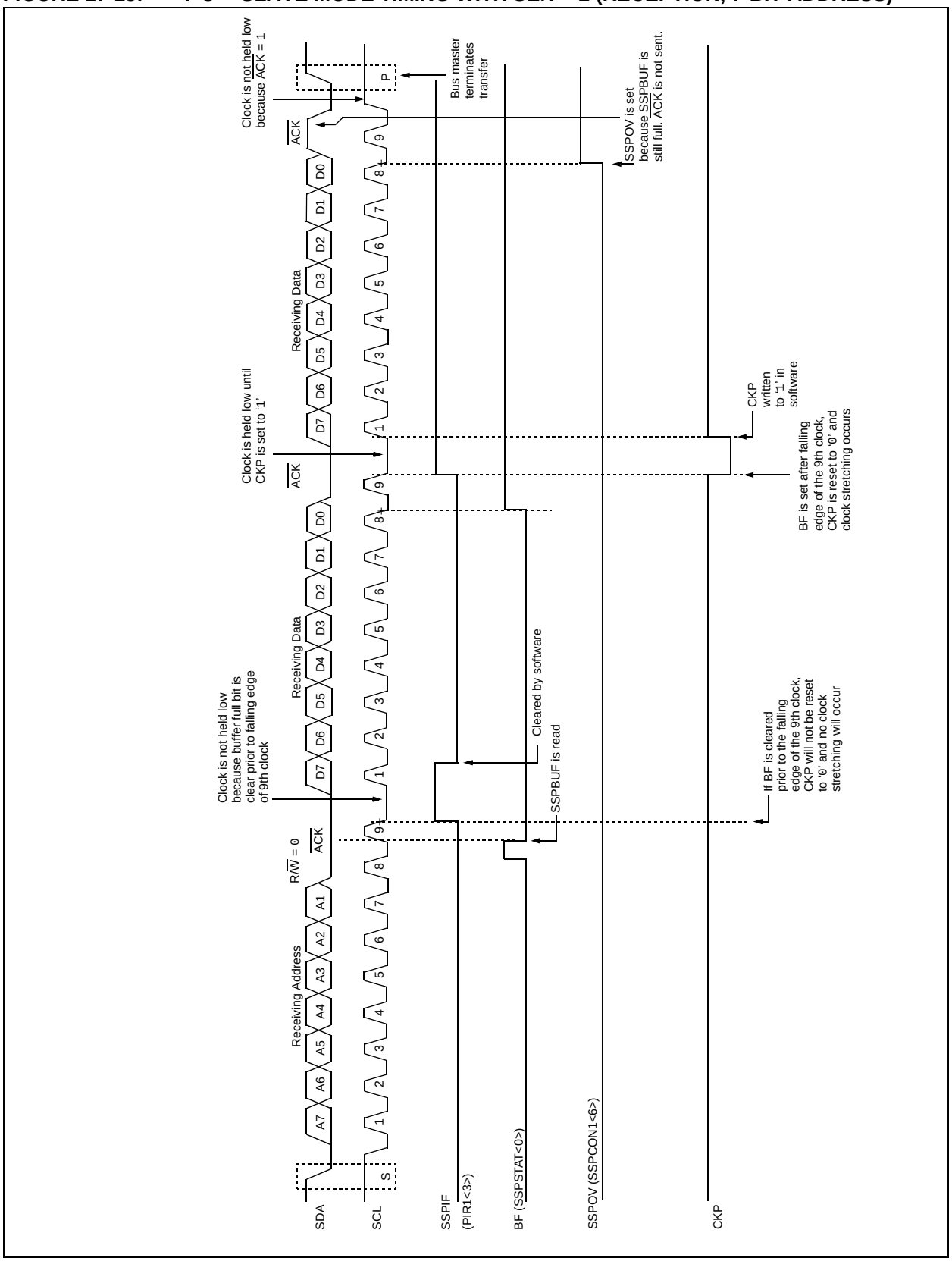

© 2010 Microchip Technology Inc.

FIGURE 17-14: I²C™ SLAVE MODE TIMING WITH SEN = 1 (RECEPTION, 10-BIT ADDRESS)

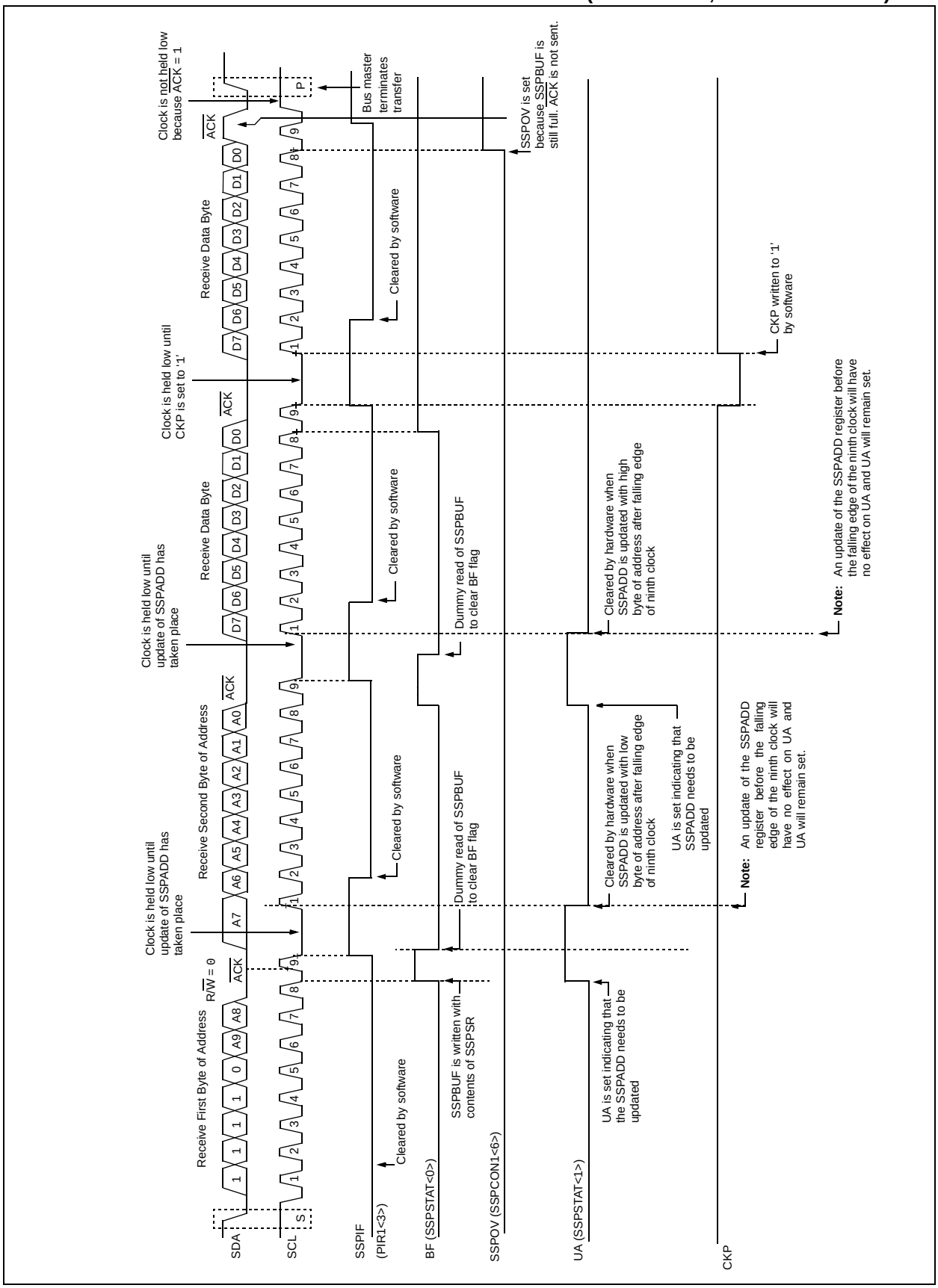

17.4.5 GENERAL CALL ADDRESS SUPPORT

The addressing procedure for the I^2C bus is such that the first byte after the Start condition usually determines which device will be the slave addressed by the master. The exception is the general call address which can address all devices. When this address is used, all devices should, in theory, respond with an Acknowledge.

The general call address is one of eight addresses reserved for specific purposes by the I^2C protocol. It consists of all '0's with R/$\overline{W}$ = 0.

The general call address is recognized when the GCEN bit of the SSPCON2 is set. Following a Start bit detect, 8 bits are shifted into the SSPSR and the address is compared against the SSPADD. It is also compared to the general call address and fixed in hardware.

If the general call address matches, the SSPSR is transferred to the SSPBUF, the BF flag bit is set (eighth bit) and on the falling edge of the ninth bit ($\overline{ACK}$ bit), the SSPIF interrupt flag bit is set.

When the interrupt is serviced, the source for the interrupt can be checked by reading the contents of the SSPBUF. The value can be used to determine if the address was device specific or a general call address.

In 10-bit mode, the SSPADD is required to be updated for the second half of the address to match and the UA bit of the SSPSTAT register is set. If the general call address is sampled when the GCEN bit is set, while the slave is configured in 10-bit Address mode, then the second half of the address is not necessary, the UA bit will not be set and the slave will begin receiving data after the Acknowledge (Figure 17-15).

FIGURE 17-15: SLAVE MODE GENERAL CALL ADDRESS SEQUENCE (7 OR 10-BIT ADDRESS MODE)

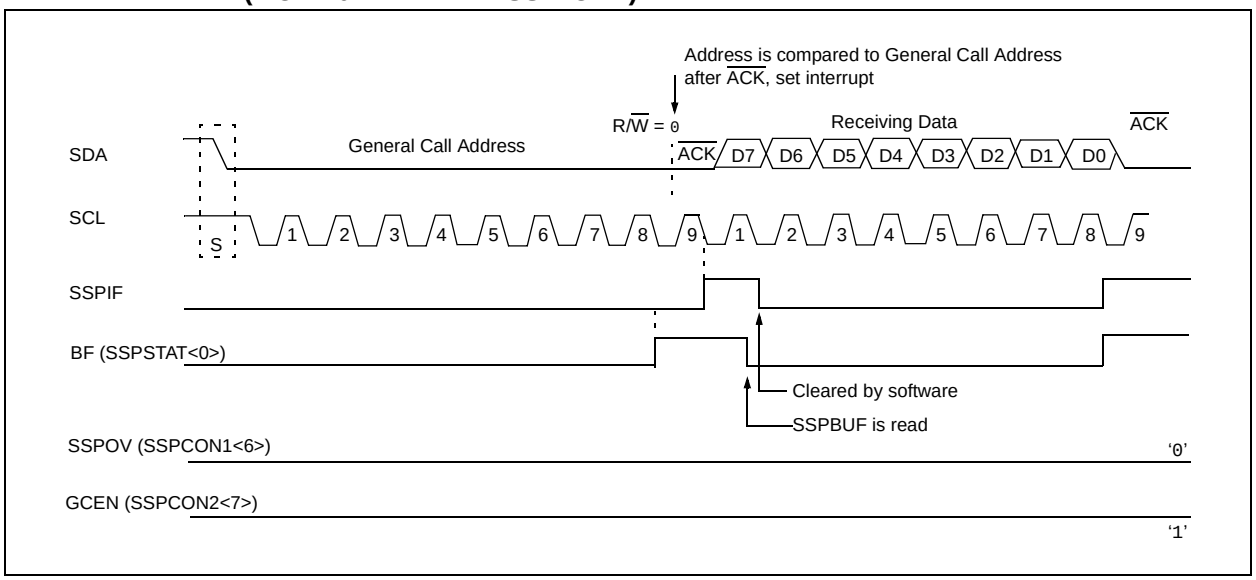

© 2010 Microchip Technology Inc.

17.4.6 MASTER MODE

Master mode is enabled by setting and clearing the appropriate SSPM bits in SSPCON1 and by setting the SSPEN bit. In Master mode, the SCL and SDA lines are manipulated by the MSSP hardware.

Master mode of operation is supported by interrupt generation on the detection of the Start and Stop conditions. The Stop (P) and Start (S) bits are cleared from a Reset or when the MSSP module is disabled. Control of the I^2C bus may be taken when the P bit is set, or the bus is Idle, with both the S and P bits clear.

In Firmware Controlled Master mode, user code conducts all I^2C bus operations based on Start and Stop bit conditions.

Once Master mode is enabled, the user has six options.

1. Assert a Start condition on SDA and SCL.
2. Assert a Repeated Start condition on SDA and SCL.
3. Write to the SSPBUF register initiating transmission of data/address.
4. Configure the I^2C port to receive data.
5. Generate an Acknowledge condition at the end of a received byte of data.
6. Generate a Stop condition on SDA and SCL.

Note: The MSSP module, when configured in I^2C Master mode, does not allow queueing of events. For instance, the user is not allowed to initiate a Start condition and immediately write the SSPBUF register to initiate transmission before the Start condition is complete. In this case, the SSPBUF will not be written to and the WCOL bit will be set, indicating that a write to the SSPBUF did not occur.

The following events will cause the SSP Interrupt Flag bit, SSPIF, to be set (SSP interrupt, if enabled):

- Start condition
- Stop condition
- Data transfer byte transmitted/received
- Acknowledge transmit
- Repeated Start

FIGURE 17-16: MSSP BLOCK DIAGRAM (I^2C™ MASTER MODE)

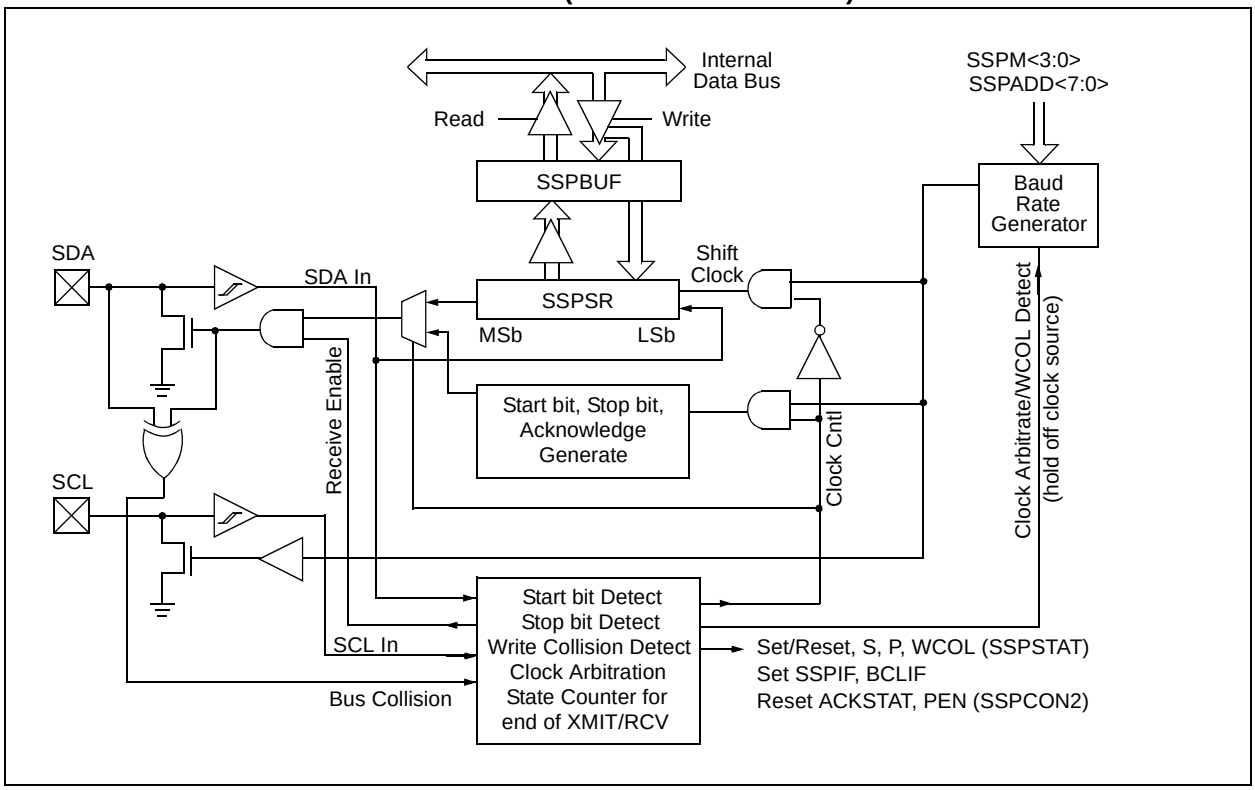

17.4.6.1 I²C Master Mode Operation

The master device generates all of the serial clock pulses and the Start and Stop conditions. A transfer is ended with a Stop condition or with a Repeated Start condition. Since the Repeated Start condition is also the beginning of the next serial transfer, the I²C bus will not be released.

In Master Transmitter mode, serial data is output through SDA, while SCL outputs the serial clock. The first byte transmitted contains the slave address of the receiving device (7 bits) and the Read/Write (R/$\overline{W}$) bit. In this case, the R/$\overline{W}$ bit will be logic '0'. Serial data is transmitted 8 bits at a time. After each byte is transmitted, an Acknowledge bit is received. Start and Stop conditions are output to indicate the beginning and the end of a serial transfer.

In Master Receive mode, the first byte transmitted contains the slave address of the transmitting device (7 bits) and the R/$\overline{W}$ bit. In this case, the R/$\overline{W}$ bit will be logic '1'. Thus, the first byte transmitted is a 7-bit slave address followed by a '1' to indicate the receive bit. Serial data is received via SDA, while SCL outputs the serial clock. Serial data is received 8 bits at a time. After each byte is received, an Acknowledge bit is transmitted. Start and Stop conditions indicate the beginning and end of transmission.

The Baud Rate Generator used for the SPI mode operation is used to set the SCL clock frequency for either 100 kHz, 400 kHz or 1 MHz I²C operation. See **Section 17.4.7 "Baud Rate"** for more detail.

A typical transmit sequence would go as follows:

1. The user generates a Start condition by setting the SEN bit of the SSPCON2 register.
2. SSPIF is set. The MSSP module will wait the required start time before any other operation takes place.
3. The user loads the SSPBUF with the slave address to transmit.
4. Address is shifted out the SDA pin until all 8 bits are transmitted.
5. The MSSP module shifts in the $\overline{ACK}$ bit from the slave device and writes its value into the ACKSTAT bit of the SSPCON2 register.
6. The MSSP module generates an interrupt at the end of the ninth clock cycle by setting the SSPIF bit.
7. The user loads the SSPBUF with eight bits of data.
8. Data is shifted out the SDA pin until all 8 bits are transmitted.
9. The MSSP module shifts in the $\overline{ACK}$ bit from the slave device and writes its value into the ACKSTAT bit of the SSPCON2 register.
10. The MSSP module generates an interrupt at the end of the ninth clock cycle by setting the SSPIF bit.
11. The user generates a Stop condition by setting the PEN bit of the SSPCON2 register.
12. Interrupt is generated once the Stop condition is complete.

© 2010 Microchip Technology Inc.

17.4.7 BAUD RATE

In I^2C Master mode, the Baud Rate Generator (BRG) reload value is placed in the SSPADD register (Figure 17-17). When a write occurs to SSPBUF, the Baud Rate Generator will automatically begin counting. The BRG counts down to '0' and stops until another reload has taken place. The BRG count is decremented twice per instruction cycle (T_{CY}) on the Q2 and Q4 clocks. In I^2C Master mode, the BRG is reloaded automatically. One half of the SCL period is equal to [(SSPADD+1) • 2]/F_{OSC}. Therefore SSPADD = (F_{CY}/F_{SCL}) -1.

Once the given operation is complete (i.e., transmission of the last data bit is followed by ACK), the internal clock will automatically stop counting and the SCL pin will remain in its last state.

Table 17-3 demonstrates clock rates based on instruction cycles and the BRG value loaded into SSPADD.

The minimum SSPADD value for baud rate generation is 0x03.

FIGURE 17-17: BAUD RATE GENERATOR BLOCK DIAGRAM

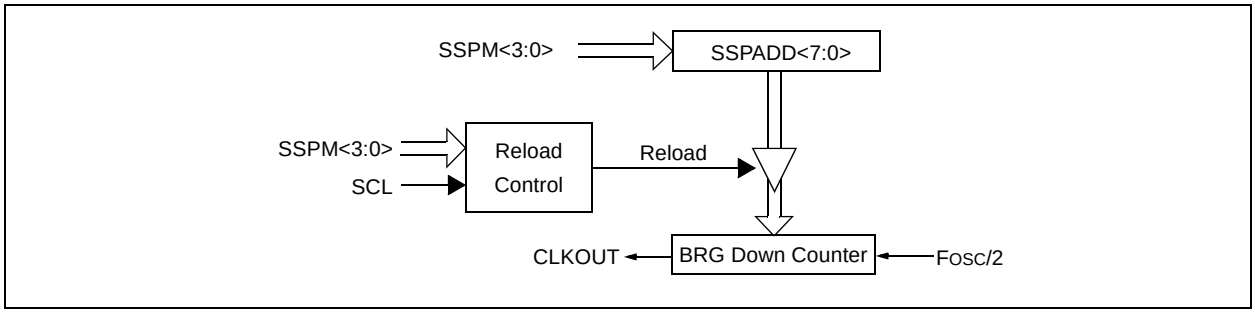

TABLE 17-3: I^2C™ CLOCK RATE W/BRG

FOSC	FCY	BRG Value	FSCL (2 Rollovers of BRG)
64 MHz	16 MHz	27h	400 kHz(1)
64 MHz	16 MHz	32h	313.7 kHz
64 MHz	16 MHz	3Fh	250 kHz
40 MHz	10 MHz	18h	400 kHz(1)
40 MHz	10 MHz	1Fh	312.5 kHz
40 MHz	10 MHz	63h	100 kHz
16 MHz	4 MHz	09h	400 kHz(1)
16 MHz	4 MHz	0Ch	308 kHz
16 MHz	4 MHz	27h	100 kHz
4 MHz	1 MHz	09h	100 kHz

Note 1: The I^2C interface does not conform to the 400 kHz I^2C specification (which applies to rates greater than 100 kHz) in all details, but may be used with care where higher rates are required by the application.

17.4.7.1 Clock Arbitration

Clock arbitration occurs when the master, during any receive, transmit or Repeated Start/Stop condition, deasserts the SCL pin (SCL allowed to float high). When the SCL pin is allowed to float high, the Baud Rate Generator (BRG) is suspended from counting until the SCL pin is actually sampled high. When the SCL pin is sampled high, the Baud Rate Generator is reloaded with the contents of SSPADD<7:0> and begins counting. This ensures that the SCL high time will always be at least one BRG rollover count in the event that the clock is held low by an external device (Figure 17-18).

FIGURE 17-18: BAUD RATE GENERATOR TIMING WITH CLOCK ARBITRATION

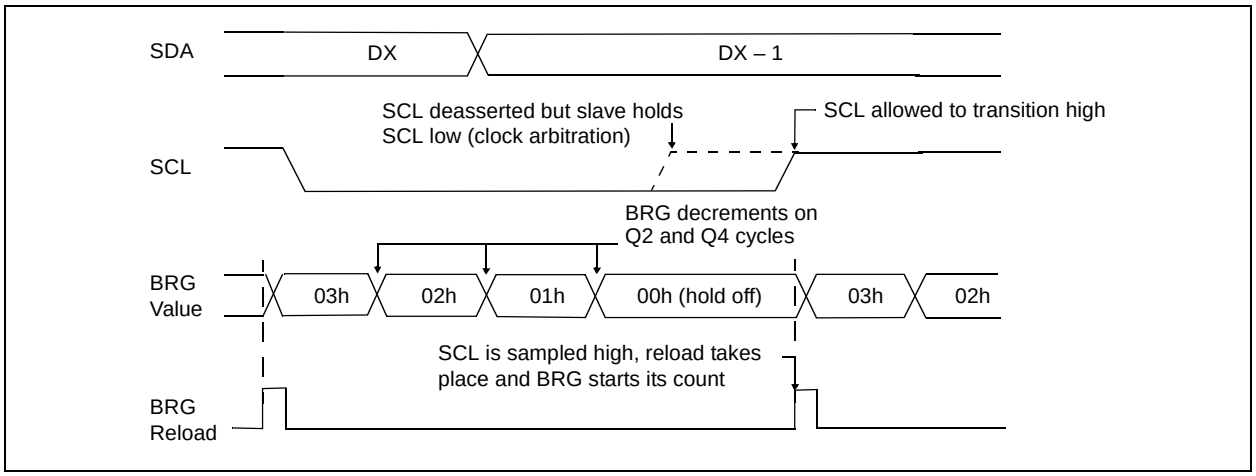

© 2010 Microchip Technology Inc.

17.4.8 I²C MASTER MODE START CONDITION TIMING

To initiate a Start condition, the user sets the Start Enable bit, SEN bit of the SSPCON2 register. If the SDA and SCL pins are sampled high, the Baud Rate Generator is reloaded with the contents of SSPADD<6:0> and starts its count. If SCL and SDA are both sampled high when the Baud Rate Generator times out (TBRG), the SDA pin is driven low. The action of the SDA being driven low while SCL is high is the Start condition and causes the S bit of the SSPSTAT1 register to be set. Following this, the Baud Rate Generator is reloaded with the contents of SSPADD<7:0> and resumes its count. When the Baud Rate Generator times out (TBRG), the SEN bit of the SSPCON2 register will be automatically cleared by hardware; the Baud Rate Generator is suspended, leaving the SDA line held low and the Start condition is complete.

Note:	If at the beginning of the Start condition, the SDA and SCL pins are already sampled low, or if during the Start condition, the SCL line is sampled low before the SDA line is driven low, a bus collision occurs, the Bus Collision Interrupt Flag, BCLIF, is set, the Start condition is aborted and the I²C module is reset into its Idle state.

17.4.8.1 WCOL Status Flag

If the user writes the SSPBUF when a Start sequence is in progress, the WCOL is set and the contents of the buffer are unchanged (the write doesn't occur).

Note:	Because queueing of events is not allowed, writing to the lower 5 bits of SSPCON2 is disabled until the Start condition is complete.

FIGURE 17-19: FIRST START BIT TIMING

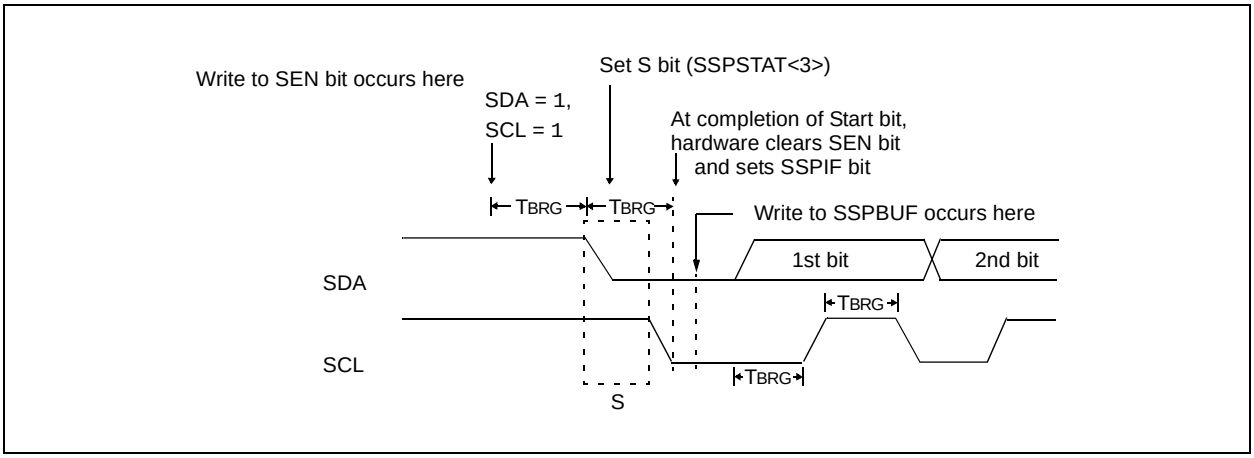

17.4.9 I²C MASTER MODE REPEATED START CONDITION TIMING

A Repeated Start condition occurs when the RSEN bit of the SSPCON2 register is programmed high and the I²C logic module is in the Idle state. When the RSEN bit is set, the SCL pin is asserted low. When the SCL pin is sampled low, the Baud Rate Generator is loaded with the contents of SSPADD<5:0> and begins counting. The SDA pin is released (brought high) for one Baud Rate Generator count (TBRG). When the Baud Rate Generator times out, if SDA is sampled high, the SCL pin will be deasserted (brought high). When SCL is sampled high, the Baud Rate Generator is reloaded with the contents of SSPADD<7:0> and begins counting. SDA and SCL must be sampled high for one TBRG. This action is then followed by assertion of the SDA pin (SDA = 0) for one TBRG while SCL is high. Following this, the RSEN bit of the SSPCON2 register will be automatically cleared and the Baud Rate Generator will not be reloaded, leaving the SDA pin held low. As soon as a Start condition is detected on the SDA and SCL pins, the S bit of the SSPSTAT register will be set. The SSPIF bit will not be set until the Baud Rate Generator has timed out.

Note 1: If RSEN is programmed while any other event is in progress, it will not take effect.

2: A bus collision during the Repeated Start condition occurs if:

- SDA is sampled low when SCL goes from low-to-high.
- SCL goes low before SDA is asserted low. This may indicate that another master is attempting to transmit a data '1'.

Immediately following the SSPIF bit getting set, the user may write the SSPBUF with the 7-bit address in 7-bit mode or the default first address in 10-bit mode. After the first eight bits are transmitted and an $\overline{\text{ACK}}$ is received, the user may then transmit an additional eight bits of address (10-bit mode) or eight bits of data (7-bit mode).

17.4.9.1 WCOL Status Flag

If the user writes the SSPBUF when a Repeated Start sequence is in progress, the WCOL is set and the contents of the buffer are unchanged (the write doesn't occur).

Note: Because queueing of events is not allowed, writing of the lower 5 bits of SSPCON2 is disabled until the Repeated Start condition is complete.

FIGURE 17-20: REPEAT START CONDITION WAVEFORM

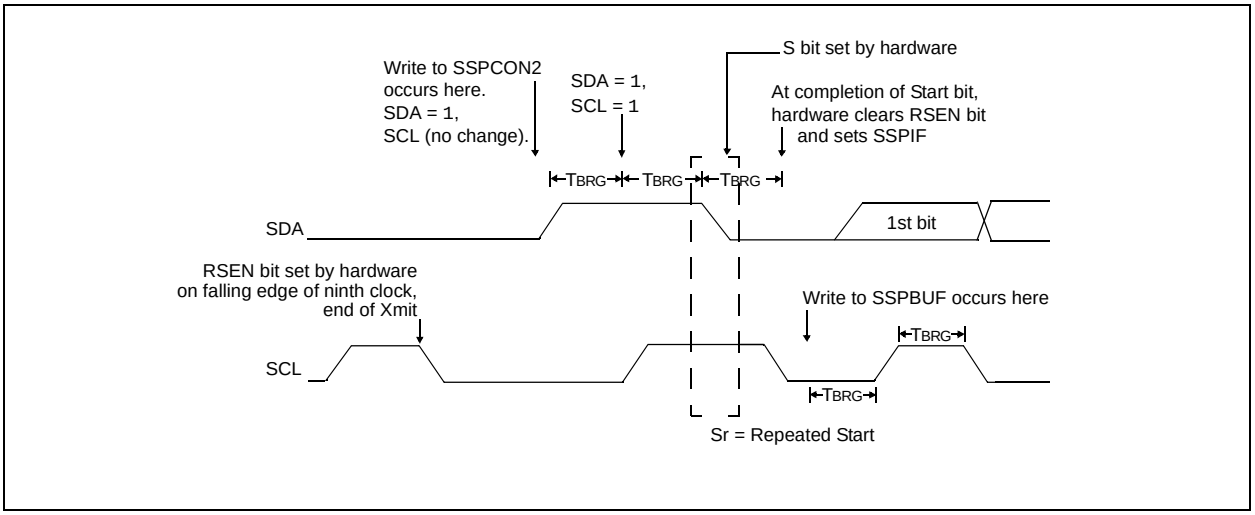

© 2010 Microchip Technology Inc.

17.4.10 I²C MASTER MODE TRANSMISSION

Transmission of a data byte, a 7-bit address or the other half of a 10-bit address is accomplished by simply writing a value to the SSPBUF register. This action will set the Buffer Full flag bit, BF and allow the Baud Rate Generator to begin counting and start the next transmission. Each bit of address/data will be shifted out onto the SDA pin after the falling edge of SCL is asserted (see data hold time specification parameter 106). SCL is held low for one Baud Rate Generator rollover count (TBRG). Data should be valid before SCL is released high (see data setup time specification parameter 107). When the SCL pin is released high, it is held that way for TBRG. The data on the SDA pin must remain stable for that duration and some hold time after the next falling edge of SCL. After the eighth bit is shifted out (the falling edge of the eighth clock), the BF flag is cleared and the master releases SDA. This allows the slave device being addressed to respond with an ACK bit during the ninth bit time if an address match occurred, or if data was received properly. The status of ACK is written into the ACKDT bit on the falling edge of the ninth clock. If the master receives an Acknowledge, the Acknowledge Status bit, ACKSTAT, is cleared. If not, the bit is set. After the ninth clock, the SSPIF bit is set and the master clock (Baud Rate Generator) is suspended until the next data byte is loaded into the SSPBUF, leaving SCL low and SDA unchanged (Figure 17-21).

After the write to the SSPBUF, each bit of the address will be shifted out on the falling edge of SCL until all seven address bits and the R/W bit are completed. On the falling edge of the eighth clock, the master will deassert the SDA pin, allowing the slave to respond with an Acknowledge. On the falling edge of the ninth clock, the master will sample the SDA pin to see if the address was recognized by a slave. The status of the ACK bit is loaded into the ACKSTAT Status bit of the SSPCON2 register. Following the falling edge of the ninth clock transmission of the address, the SSPIF is set, the BF flag is cleared and the Baud Rate Generator is turned off until another write to the SSPBUF takes place, holding SCL low and allowing SDA to float.

17.4.10.1 BF Status Flag

In Transmit mode, the BF bit of the SSPSTAT register is set when the CPU writes to SSPBUF and is cleared when all 8 bits are shifted out.

17.4.10.2 WCOL Status Flag

If the user writes the SSPBUF when a transmit is already in progress (i.e., SSPSR is still shifting out a data byte), the WCOL is set and the contents of the buffer are unchanged (the write doesn't occur).

WCOL must be cleared by software.

17.4.10.3 ACKSTAT Status Flag

In Transmit mode, the ACKSTAT bit of the SSPCON2 register is cleared when the slave has sent an Acknowledge (ACK = 0) and is set when the slave does not Acknowledge (ACK = 1). A slave sends an Acknowledge when it has recognized its address (including a general call), or when the slave has properly received its data.

17.4.11 I²C MASTER MODE RECEPTION

Master mode reception is enabled by programming the Receive Enable bit, RCEN bit of the SSPCON2 register.

Note:	The MSSP module must be in an Idle state before the RCEN bit is set or the RCEN bit will be disregarded.

The Baud Rate Generator begins counting and on each rollover, the state of the SCL pin changes (high-to-low/low-to-high) and data is shifted into the SSPSR. After the falling edge of the eighth clock, the receive enable flag is automatically cleared, the contents of the SSPSR are loaded into the SSPBUF, the BF flag bit is set, the SSPIF flag bit is set and the Baud Rate Generator is suspended from counting, holding SCL low. The MSSP is now in Idle state awaiting the next command. When the buffer is read by the CPU, the BF flag bit is automatically cleared. The user can then send an Acknowledge bit at the end of reception by setting the Acknowledge Sequence Enable, ACKEN bit of the SSPCON2 register.

17.4.11.1 BF Status Flag

In receive operation, the BF bit is set when an address or data byte is loaded into SSPBUF from SSPSR. It is cleared when the SSPBUF register is read.

17.4.11.2 SSPOV Status Flag

In receive operation, the SSPOV bit is set when 8 bits are received into the SSPSR and the BF flag bit is already set from a previous reception.

17.4.11.3 WCOL Status Flag

If the user writes the SSPBUF when a receive is already in progress (i.e., SSPSR is still shifting in a data byte), the WCOL bit is set and the contents of the buffer are unchanged (the write doesn't occur).

FIGURE 17-21: I²C™ MASTER MODE WAVEFORM (TRANSMISSION, 7 OR 10-BIT ADDRESS)

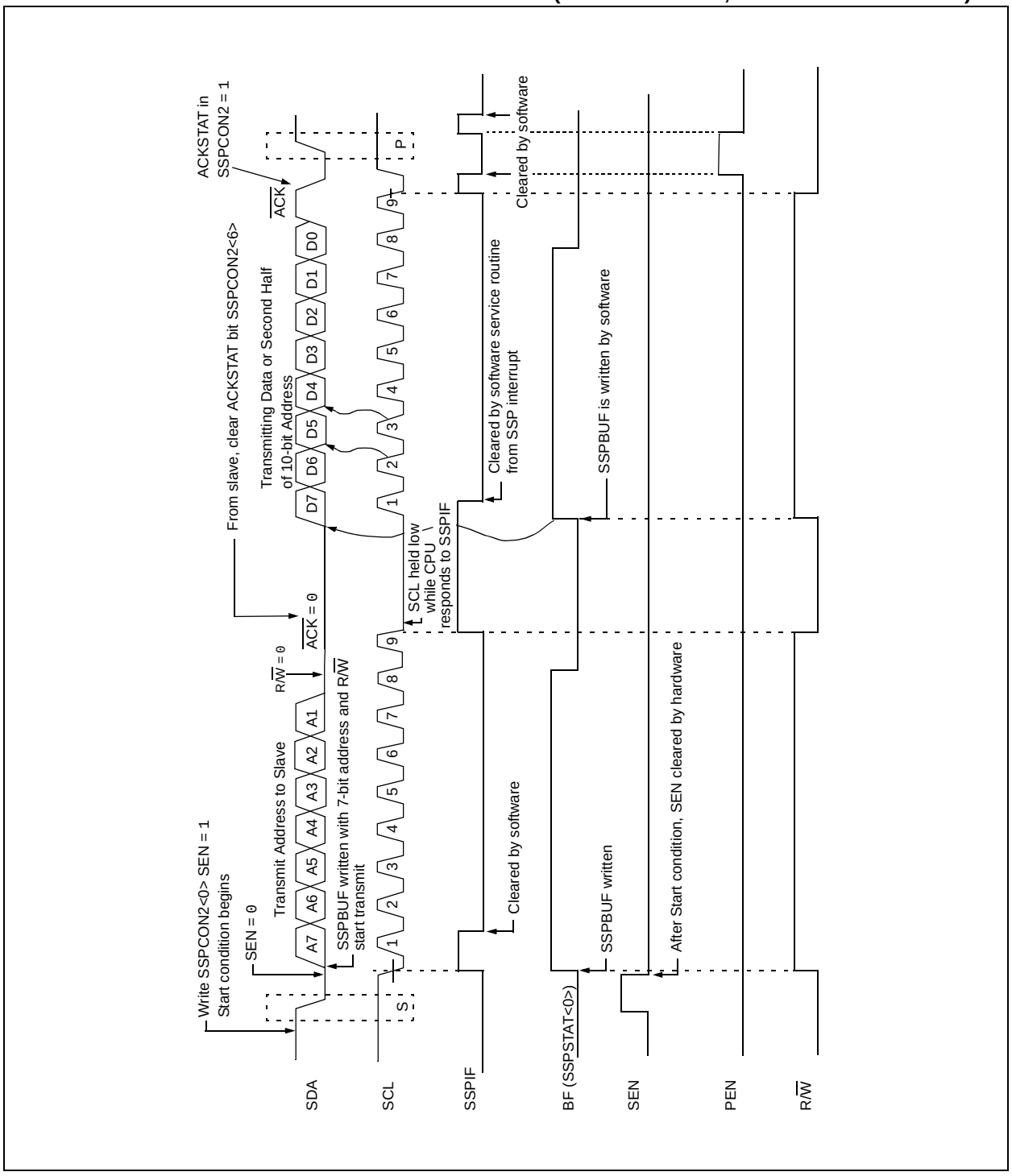

© 2010 Microchip Technology Inc.

FIGURE 17-22: I²C™ MASTER MODE WAVEFORM (RECEPTION, 7-BIT ADDRESS)

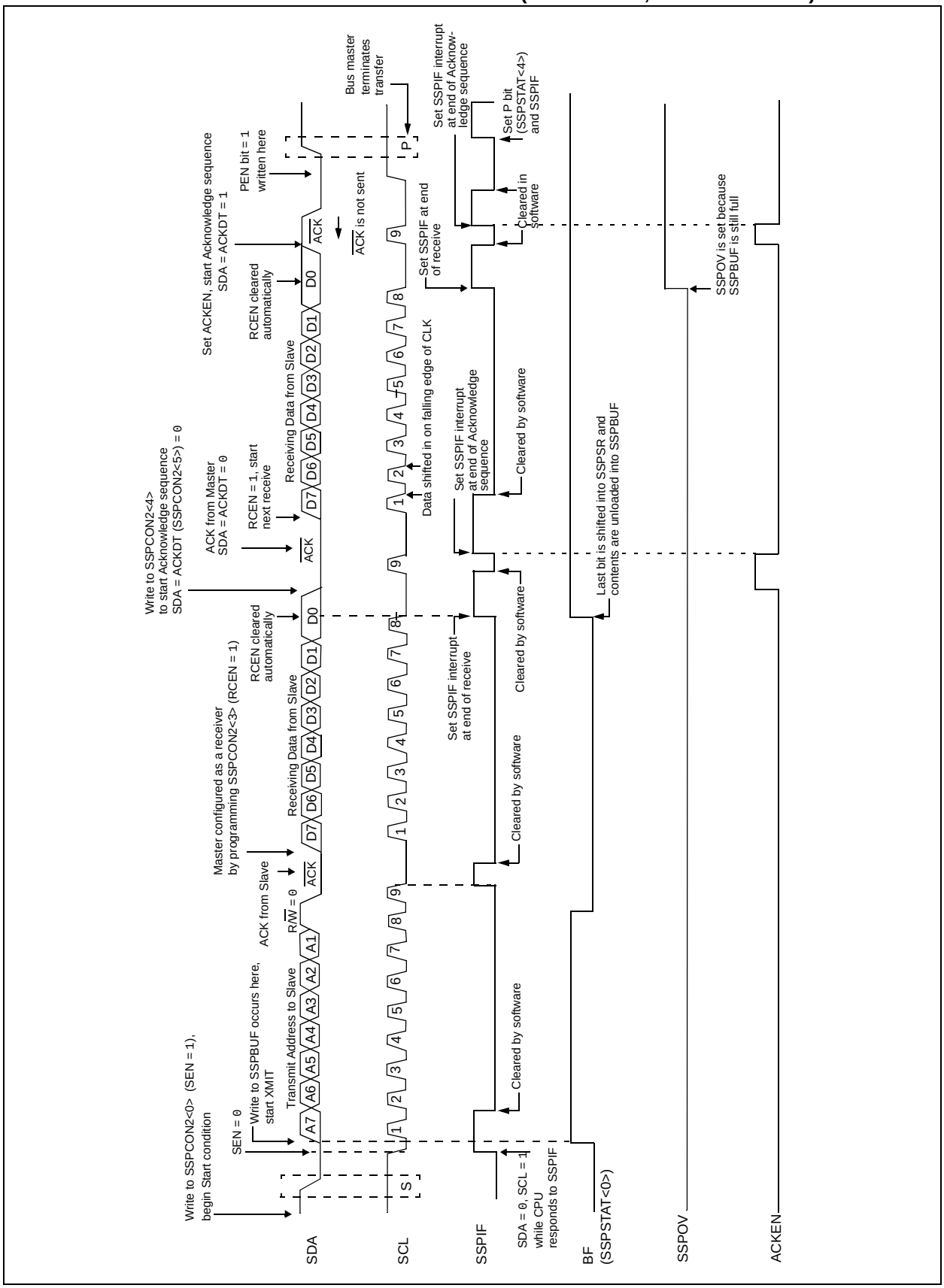

17.4.12 ACKNOWLEDGE SEQUENCE TIMING

An Acknowledge sequence is enabled by setting the Acknowledge Sequence Enable bit, ACKEN bit of the SSPCON2 register. When this bit is set, the SCL pin is pulled low and the contents of the Acknowledge data bit are presented on the SDA pin. If the user wishes to generate an Acknowledge, then the ACKDT bit should be cleared. If not, the user should set the ACKDT bit before starting an Acknowledge sequence. The Baud Rate Generator then counts for one rollover period (TBRG) and the SCL pin is deasserted (pulled high). When the SCL pin is sampled high (clock arbitration), the Baud Rate Generator counts for TBRG. The SCL pin is then pulled low. Following this, the ACKEN bit is automatically cleared, the Baud Rate Generator is turned off and the MSSP module then goes into Idle mode (Figure 17-23).

17.4.12.1 WCOL Status Flag

If the user writes the SSPBUF when an Acknowledge sequence is in progress, then WCOL is set and the contents of the buffer are unchanged (the write doesn't occur).

17.4.13 STOP CONDITION TIMING

A Stop bit is asserted on the SDA pin at the end of a receive/transmit by setting the Stop Sequence Enable bit, PEN bit of the SSPCON2 register. At the end of a receive/transmit, the SCL line is held low after the falling edge of the ninth clock. When the PEN bit is set, the master will assert the SDA line low. When the SDA line is sampled low, the Baud Rate Generator is reloaded and counts down to '0'. When the Baud Rate Generator times out, the SCL pin will be brought high and one TBRG (Baud Rate Generator rollover count) later, the SDA pin will be deasserted. When the SDA pin is sampled high while SCL is high, the P bit of the SSPSTAT register is set. A TBRG later, the PEN bit is cleared and the SSPIF bit is set (Figure 17-24).

17.4.13.1 WCOL Status Flag

If the user writes the SSPBUF when a Stop sequence is in progress, then the WCOL bit is set and the contents of the buffer are unchanged (the write doesn't occur).

FIGURE 17-23: ACKNOWLEDGE SEQUENCE WAVEFORM

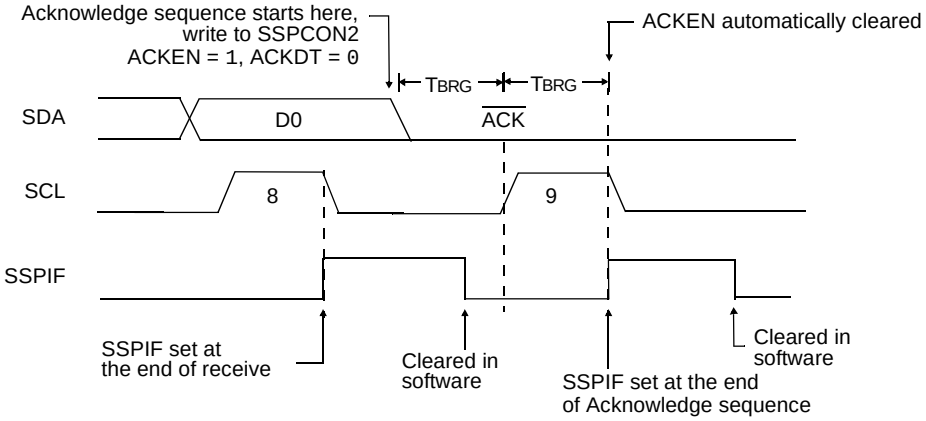

Note: TBRG = one Baud Rate Generator period.

FIGURE 17-24: STOP CONDITION RECEIVE OR TRANSMIT MODE

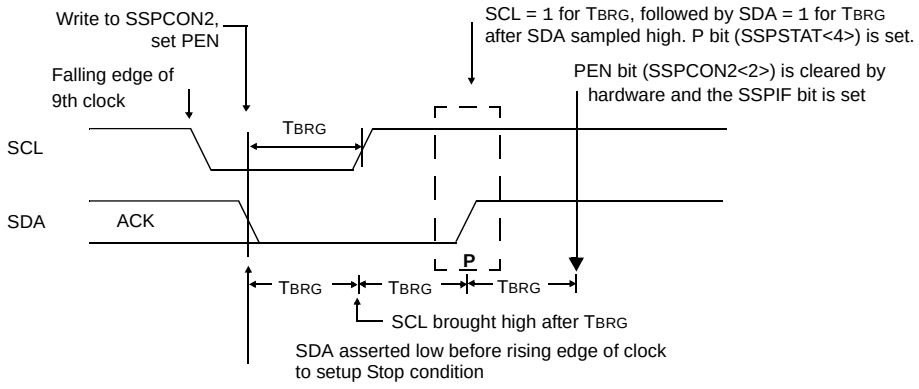

Note: TBRG = one Baud Rate Generator period.

© 2010 Microchip Technology Inc.

17.4.14 SLEEP OPERATION

While in Sleep mode, the I^2C module can receive addresses or data and when an address match or complete byte transfer occurs, wake the processor from Sleep (if the MSSP interrupt is enabled).

17.4.15 EFFECTS OF A RESET

A Reset disables the MSSP module and terminates the current transfer.

17.4.16 MULTI-MASTER MODE

In Multi-Master mode, the interrupt generation on the detection of the Start and Stop conditions allows the determination of when the bus is free. The Stop (P) and Start (S) bits are cleared from a Reset or when the MSSP module is disabled. Control of the I^2C bus may be taken when the P bit of the SSPSTAT register is set, or the bus is Idle, with both the S and P bits clear. When the bus is busy, enabling the SSP interrupt will generate the interrupt when the Stop condition occurs.

In multi-master operation, the SDA line must be monitored for arbitration to see if the signal level is the expected output level. This check is performed by hardware with the result placed in the BCLIF bit.

The states where arbitration can be lost are:

- Address Transfer
- Data Transfer
- A Start Condition
- A Repeated Start Condition
- An Acknowledge Condition

17.4.17 MULTI -MASTER COMMUNICATION, BUS COLLISION AND BUS ARBITRATION

Multi-Master mode support is achieved by bus arbitration. When the master outputs address/data bits onto the SDA pin, arbitration takes place when the master outputs a '1' on SDA, by letting SDA float high and another master asserts a '0'. When the SCL pin floats high, data should be stable. If the expected data on SDA is a '1' and the data sampled on the SDA pin = 0, then a bus collision has taken place. The master will set the Bus Collision Interrupt Flag, BCLIF and reset the I^2C port to its Idle state (Figure 17-25).

If a transmit was in progress when the bus collision occurred, the transmission is halted, the BF flag is cleared, the SDA and SCL lines are deasserted and the SSPBUF can be written to. When the user services the bus collision Interrupt Service Routine and if the I^2C bus is free, the user can resume communication by asserting a Start condition.

If a Start, Repeated Start, Stop or Acknowledge condition was in progress when the bus collision occurred, the condition is aborted, the SDA and SCL lines are deasserted and the respective control bits in the SSPCON2 register are cleared. When the user services the bus collision Interrupt Service Routine and if the I^2C bus is free, the user can resume communication by asserting a Start condition.

The master will continue to monitor the SDA and SCL pins. If a Stop condition occurs, the SSPIF bit will be set.

A write to the SSPBUF will start the transmission of data at the first data bit, regardless of where the transmitter left off when the bus collision occurred.

In Multi-Master mode, the interrupt generation on the detection of Start and Stop conditions allows the determination of when the bus is free. Control of the I^2C bus can be taken when the P bit is set in the SSPSTAT register, or the bus is Idle and the S and P bits are cleared.

FIGURE 17-25: BUS COLLISION TIMING FOR TRANSMIT AND ACKNOWLEDGE

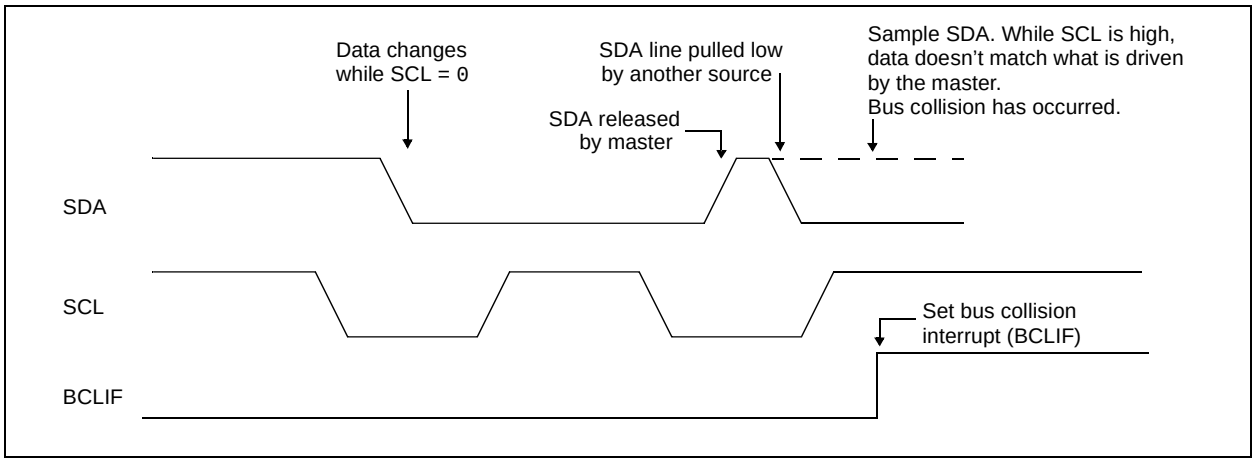

17.4.17.1 Bus Collision During a Start Condition

During a Start condition, a bus collision occurs if:

a) SDA or SCL are sampled low at the beginning of the Start condition (Figure 17-26).

b) SCL is sampled low before SDA is asserted low (Figure 17-27).

During a Start condition, both the SDA and the SCL pins are monitored.

If the SDA pin is already low, or the SCL pin is already low, then all of the following occur:

- the Start condition is aborted,
- the BCLIF flag is set and
- the MSSP module is reset to its Idle state (Figure 17-26).

The Start condition begins with the SDA and SCL pins deasserted. When the SDA pin is sampled high, the Baud Rate Generator is loaded from SSPADD<7:0> and counts down to 0. If the SCL pin is sampled low while SDA is high, a bus collision occurs because it is assumed that another master is attempting to drive a data '1' during the Start condition.

If the SDA pin is sampled low during this count, the BRG is reset and the SDA line is asserted early (Figure 17-28). If, however, a '1' is sampled on the SDA pin, the SDA pin is asserted low at the end of the BRG count. The Baud Rate Generator is then reloaded and counts down to 0; if the SCL pin is sampled as '0' during this time, a bus collision does not occur. At the end of the BRG count, the SCL pin is asserted low.

Note:	The reason that bus collision is not a factor during a Start condition is that no two bus masters can assert a Start condition at the exact same time. Therefore, one master will always assert SDA before the other. This condition does not cause a bus collision because the two masters must be allowed to arbitrate the first address following the Start condition. If the address is the same, arbitration must be allowed to continue into the data portion, Repeated Start or Stop conditions.

FIGURE 17-26: BUS COLLISION DURING START CONDITION (SDA ONLY)

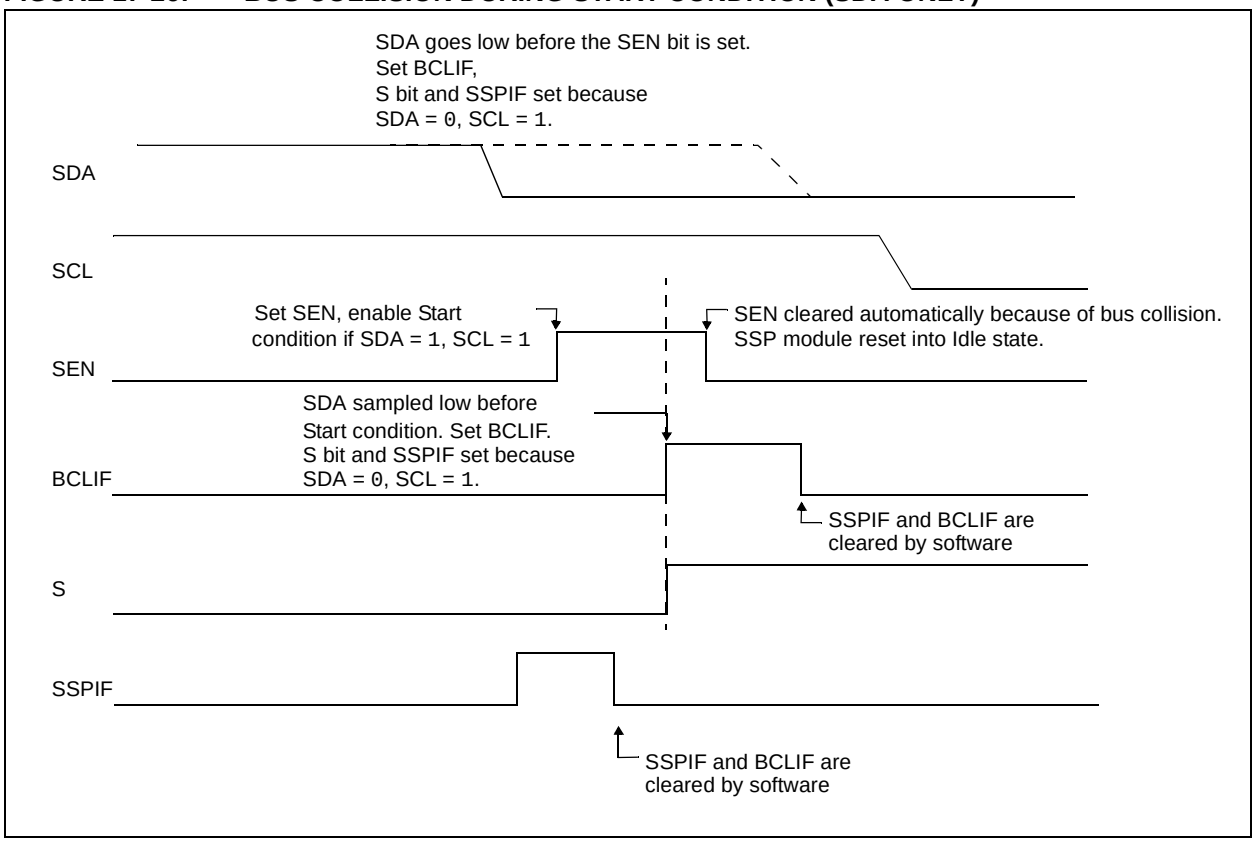

© 2010 Microchip Technology Inc.

FIGURE 17-27: BUS COLLISION DURING START CONDITION (SCL = 0)

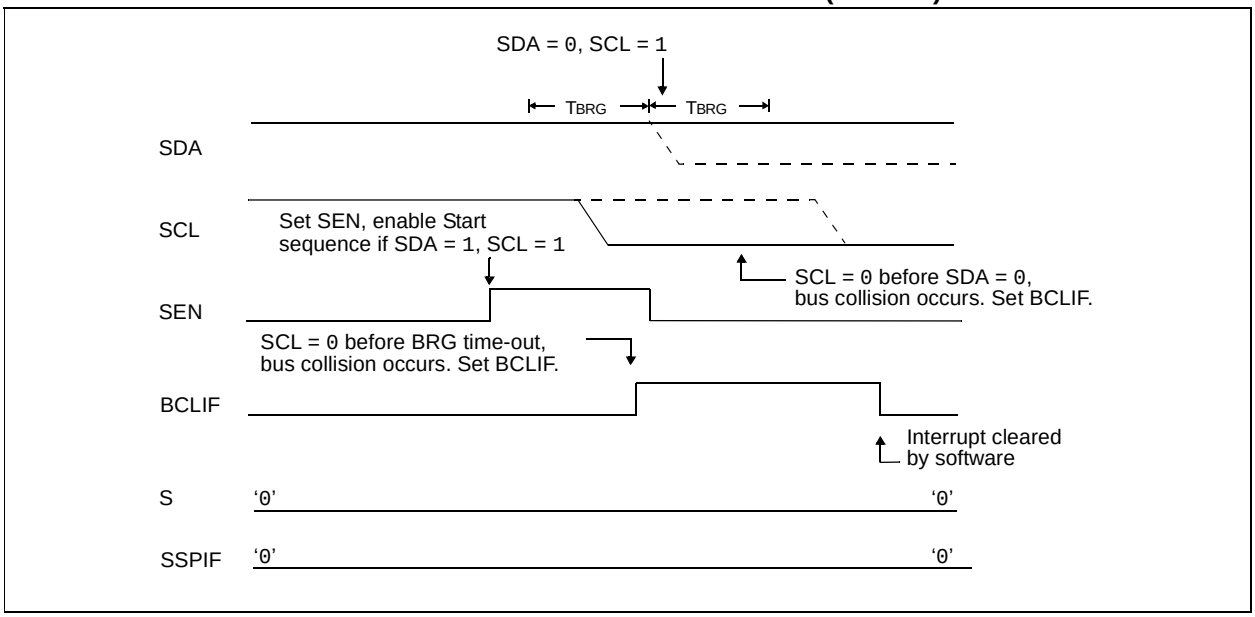

FIGURE 17-28: BRG RESET DUE TO SDA ARBITRATION DURING START CONDITION

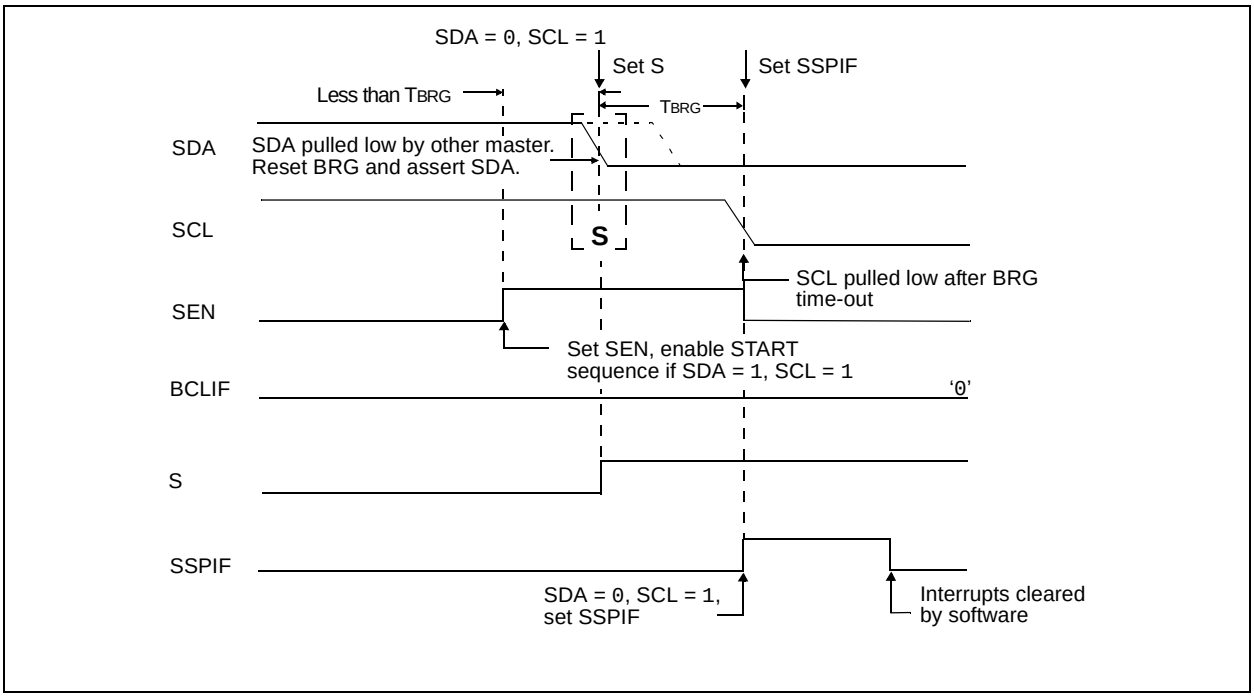

17.4.17.2 Bus Collision During a Repeated Start Condition

During a Repeated Start condition, a bus collision occurs if:

a) A low level is sampled on SDA when SCL goes from low level to high level.

b) SCL goes low before SDA is asserted low, indicating that another master is attempting to transmit a data ‘1’.

When the user deasserts SDA and the pin is allowed to float high, the BRG is loaded with SSPADD<7:0> and counts down to 0. The SCL pin is then deasserted and when sampled high, the SDA pin is sampled.

If SDA is low, a bus collision has occurred (i.e., another master is attempting to transmit a data ‘0’, Figure 17-29). If SDA is sampled high, the BRG is reloaded and begins counting. If SDA goes from high-to-low before the BRG times out, no bus collision occurs because no two masters can assert SDA at exactly the same time.

If SCL goes from high-to-low before the BRG times out and SDA has not already been asserted, a bus collision occurs. In this case, another master is attempting to transmit a data ‘1’ during the Repeated Start condition, see Figure 17-30.

If, at the end of the BRG time-out, both SCL and SDA are still high, the SDA pin is driven low and the BRG is reloaded and begins counting. At the end of the count, regardless of the status of the SCL pin, the SCL pin is driven low and the Repeated Start condition is complete.

FIGURE 17-29: BUS COLLISION DURING A REPEATED START CONDITION (CASE 1)

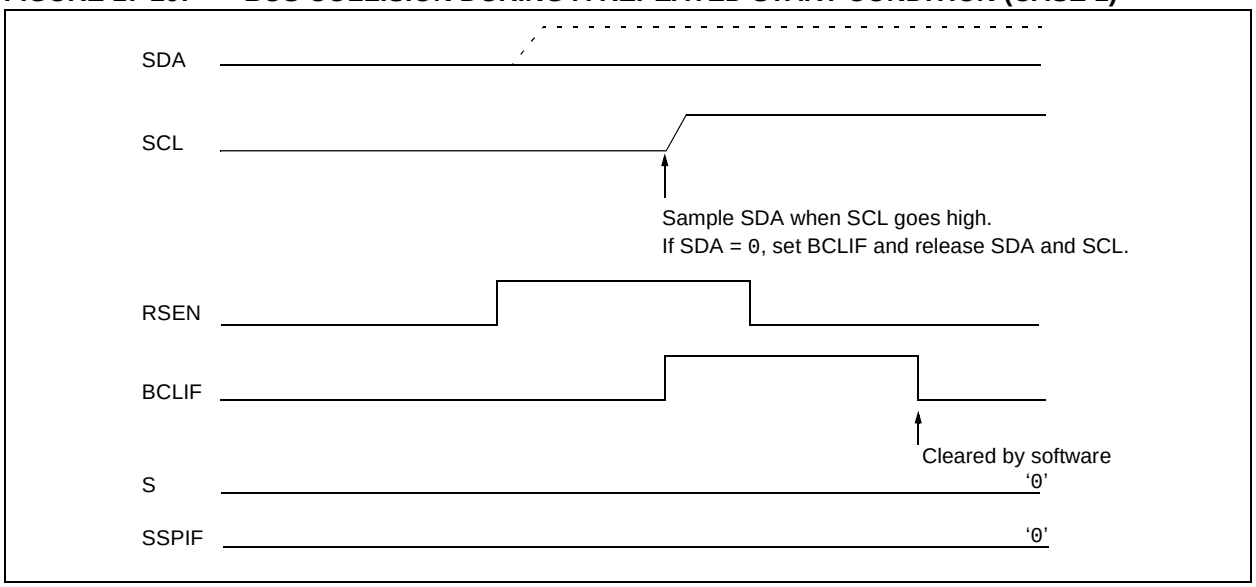

FIGURE 17-30: BUS COLLISION DURING REPEATED START CONDITION (CASE 2)

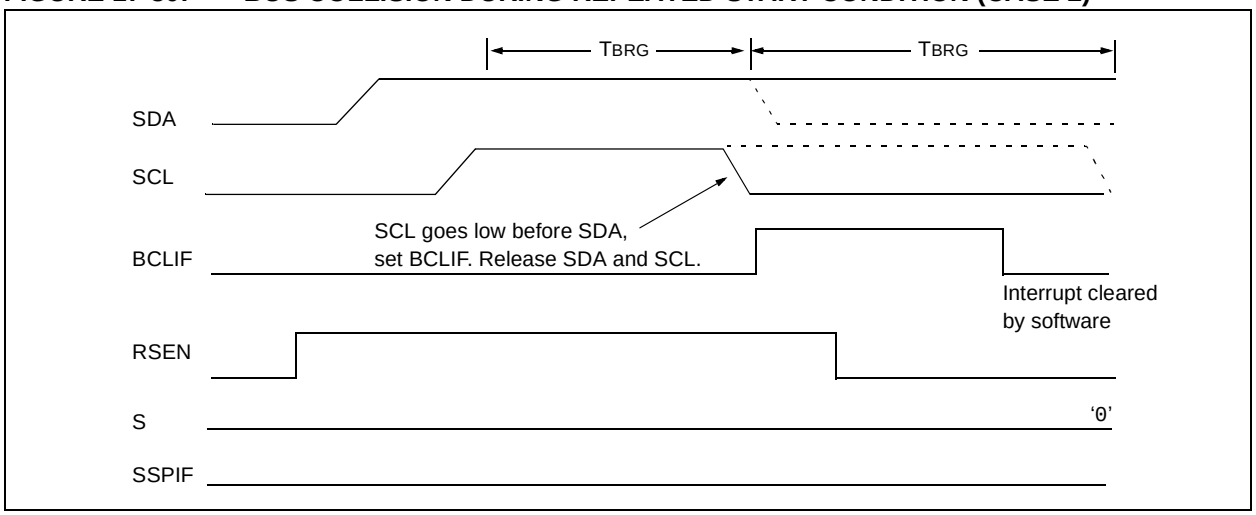

© 2010 Microchip Technology Inc.

17.4.17.3 Bus Collision During a Stop Condition

Bus collision occurs during a Stop condition if:

a) After the SDA pin has been deasserted and allowed to float high, SDA is sampled low after the BRG has timed out.

b) After the SCL pin is deasserted, SCL is sampled low before SDA goes high.

The Stop condition begins with SDA asserted low. When SDA is sampled low, the SCL pin is allowed to float. When the pin is sampled high (clock arbitration), the Baud Rate Generator is loaded with SSPADD<7:0> and counts down to 0. After the BRG times out, SDA is sampled. If SDA is sampled low, a bus collision has occurred. This is due to another master attempting to drive a data '0' (Figure 17-31). If the SCL pin is sampled low before SDA is allowed to float high, a bus collision occurs. This is another case of another master attempting to drive a data '0' (Figure 17-32).

FIGURE 17-31: BUS COLLISION DURING A STOP CONDITION (CASE 1)

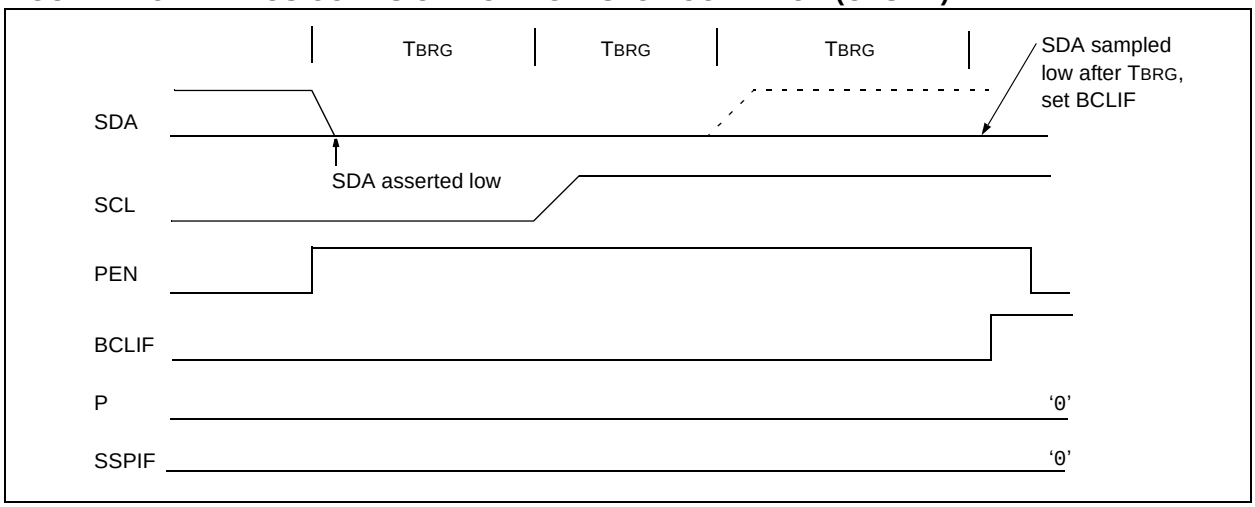

FIGURE 17-32: BUS COLLISION DURING A STOP CONDITION (CASE 2)

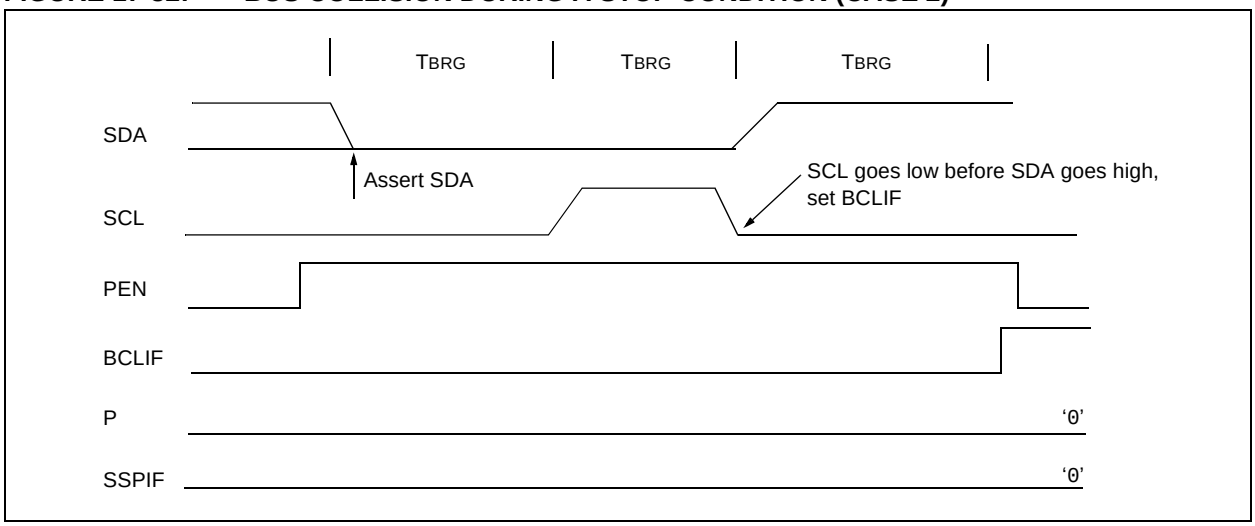

TABLE 17-4: SUMMARY OF REGISTERS ASSOCIATED WITH I²C™

Name	Bit 7	Bit 6	Bit 5	Bit 4	Bit 3	Bit 2	Bit 1	Bit 0	Reset Values on page
IPR1	PSPIP(1)	ADIP	RCIP	TXIP	SSPIP	CCP1IP	TMR2IP	TMR1IP	62
PIR1	PSPIF(1)	ADIF	RCIF	TXIF	SSPIF	CCP1IF	TMR2IF	TMR1IF	62
PIE1	PSPIE(1)	ADIE	RCIE	TXIE	SSPIE	CCP1IE	TMR2IE	TMR1IE	62
IPR2	OSCFIP	C1IP	C2IP	EEIP	BCLIP	HLVDIP	TMR3IP	CCP2IP	62
PIR2	OSCFIF	C1IF	C2IF	EEIF	BCLIF	HLVDIF	TMR3IF	CCP2IF	62
PIE2	OSCFIE	C1IE	C2IE	EEIE	BCLIE	HLVDIE	TMR3IE	CCP2IE	62
SSPADD	SSP Address Register in I²C™ Slave Mode. SSP Baud Rate Reload Register in I²C Master Mode.								60
SSPBUF	SSP Receive Buffer/Transmit Register								60
SSPCON1	WCOL	SSPOV	SSPEN	CKP	SSPM3	SSPM2	SSPM1	SSPM0	60
SSPCON2	GCEN	ACKSTAT	ACKDT	ACKEN	RCEN	PEN	RSEN	SEN	60
SSPMSK	MSK7	MSK6	MSK5	MSK4	MSK3	MSK2	MSK1	MSK0	63
SSPSTAT	SMP	CKE	D/$\overline{A}$	P	S	R/$\overline{W}$	UA	BF	60
TRISC	TRISC7	TRISC6	TRISC5	TRISC4	TRISC3	TRISC2	TRISC1	TRISC0	62

Legend: — = unimplemented, read as '0'. Shaded cells are not used by PORTA.

Note 1: Not implemented on PIC18F2XK20 devices

© 2010 Microchip Technology Inc.

NOTES:

© 2010 Microchip Technology Inc.

18.0 ENHANCED UNIVERSAL SYNCHRONOUS ASYNCHRONOUS RECEIVER TRANSMITTER (EUSART)

The Enhanced Universal Synchronous Asynchronous Receiver Transmitter (EUSART) module is a serial I/O communications peripheral. It contains all the clock generators, shift registers and data buffers necessary to perform an input or output serial data transfer independent of device program execution. The EUSART, also known as a Serial Communications Interface (SCI), can be configured as a full-duplex asynchronous system or half-duplex synchronous system. Full-Duplex mode is useful for communications with peripheral systems, such as CRT terminals and personal computers. Half-Duplex Synchronous mode is intended for communications with peripheral devices, such as A/D or D/A integrated circuits, serial EEPROMs or other microcontrollers. These devices typically do not have internal clocks for baud rate generation and require the external clock signal provided by a master synchronous device.

The EUSART module includes the following capabilities:

- Full-duplex asynchronous transmit and receive
- Two-character input buffer
- One-character output buffer
- Programmable 8-bit or 9-bit character length
- Address detection in 9-bit mode
- Input buffer overrun error detection
- Received character framing error detection
- Half-duplex synchronous master
- Half-duplex synchronous slave
- Programmable clock and data polarity

The EUSART module implements the following additional features, making it ideally suited for use in Local Interconnect Network (LIN) bus systems:

- Automatic detection and calibration of the baud rate
- Wake-up on Break reception
- 13-bit Break character transmit

Block diagrams of the EUSART transmitter and receiver are shown in Figure 18-1 and Figure 18-2.

FIGURE 18-1: EUSART TRANSMIT BLOCK DIAGRAM

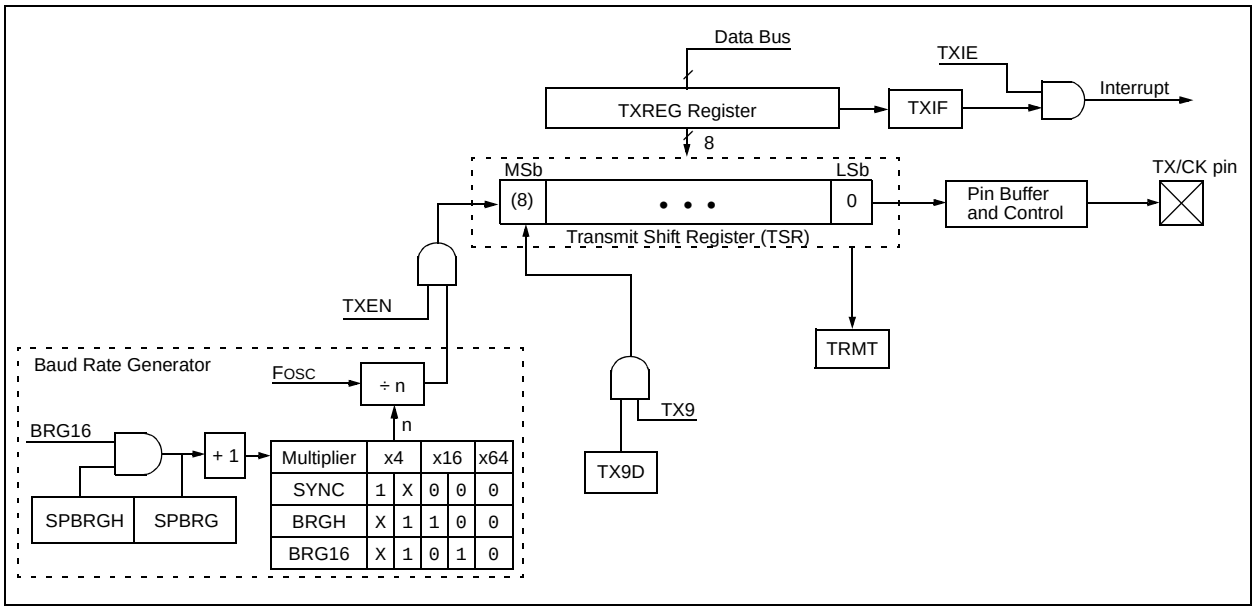

FIGURE 18-2: EUSART RECEIVE BLOCK DIAGRAM

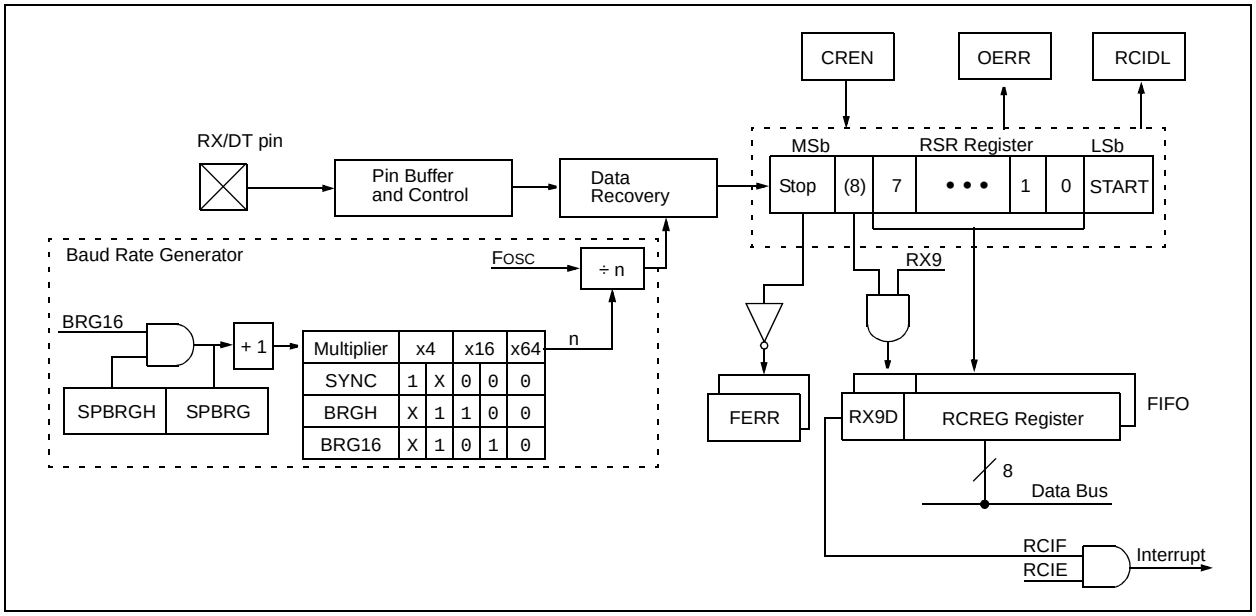

The operation of the EUSART module is controlled through three registers:

- Transmit Status and Control (TXSTA)
- Receive Status and Control (RCSTA)
- Baud Rate Control (BAUDCON)

These registers are detailed in Register 18-1, Register 18-2 and Register 18-3, respectively.

For all modes of EUSART operation, the TRIS control bits corresponding to the RX/DT and TX/CK pins should be set to '1'. The EUSART control will automatically reconfigure the pin from input to output, as needed.

When the receiver or transmitter section is not enabled then the corresponding RX or TX pin may be used for general purpose input and output.

© 2010 Microchip Technology Inc.

18.1 EUSART Asynchronous Mode

The EUSART transmits and receives data using the standard non-return-to-zero (NRZ) format. NRZ is implemented with two levels: a VOH mark state which represents a '1' data bit, and a VOL space state which represents a '0' data bit. NRZ refers to the fact that consecutively transmitted data bits of the same value stay at the output level of that bit without returning to a neutral level between each bit transmission. An NRZ transmission port idles in the mark state. Each character transmission consists of one Start bit followed by eight or nine data bits and is always terminated by one or more Stop bits. The Start bit is always a space and the Stop bits are always marks. The most common data format is 8 bits. Each transmitted bit persists for a period of 1/(Baud Rate). An on-chip dedicated 8-bit/16-bit Baud Rate Generator is used to derive standard baud rate frequencies from the system oscillator. See Table 18-5 for examples of baud rate configurations.

The EUSART transmits and receives the LSb first. The EUSART's transmitter and receiver are functionally independent, but share the same data format and baud rate. Parity is not supported by the hardware, but can be implemented in software and stored as the ninth data bit.

18.1.1 EUSART ASYNCHRONOUS TRANSMITTER

The EUSART transmitter block diagram is shown in Figure 18-1. The heart of the transmitter is the serial Transmit Shift Register (TSR), which is not directly accessible by software. The TSR obtains its data from the transmit buffer, which is the TXREG register.

18.1.1.1 Enabling the Transmitter

The EUSART transmitter is enabled for asynchronous operations by configuring the following three control bits:

- TXEN = 1
- SYNC = 0
- SPEN = 1

All other EUSART control bits are assumed to be in their default state.

Setting the TXEN bit of the TXSTA register enables the transmitter circuitry of the EUSART. Clearing the SYNC bit of the TXSTA register configures the EUSART for asynchronous operation. Setting the SPEN bit of the RCSTA register enables the EUSART and automatically configures the TX/CK I/O pin as an output. If the TX/CK pin is shared with an analog peripheral the analog I/O function must be disabled by clearing the corresponding ANSEL bit.

Note:	The TXIF transmitter interrupt flag is set when the TXEN enable bit is set.

18.1.1.2 Transmitting Data

A transmission is initiated by writing a character to the TXREG register. If this is the first character, or the previous character has been completely flushed from the TSR, the data in the TXREG is immediately transferred to the TSR register. If the TSR still contains all or part of a previous character, the new character data is held in the TXREG until the Stop bit of the previous character has been transmitted. The pending character in the TXREG is then transferred to the TSR in one TCY immediately following the Stop bit transmission. The transmission of the Start bit, data bits and Stop bit sequence commences immediately following the transfer of the data to the TSR from the TXREG.

18.1.1.3 Transmit Data Polarity

The polarity of the transmit data can be controlled with the CKTXP bit of the BAUDCON register. The default state of this bit is '0' which selects high true transmit idle and data bits. Setting the CKTXP bit to '1' will invert the transmit data resulting in low true idle and data bits. The CKTXP bit controls transmit data polarity only in Asynchronous mode. In Synchronous mode the CKTXP bit has a different function.

18.1.1.4 Transmit Interrupt Flag

The TXIF interrupt flag bit of the PIR1 register is set whenever the EUSART transmitter is enabled and no character is being held for transmission in the TXREG. In other words, the TXIF bit is only clear when the TSR is busy with a character and a new character has been queued for transmission in the TXREG. The TXIF flag bit is not cleared immediately upon writing TXREG. TXIF becomes valid in the second instruction cycle following the write execution. Polling TXIF immediately following the TXREG write will return invalid results. The TXIF bit is read-only, it cannot be set or cleared by software.

The TXIF interrupt can be enabled by setting the TXIE interrupt enable bit of the PIE1 register. However, the TXIF flag bit will be set whenever the TXREG is empty, regardless of the state of TXIE enable bit.

To use interrupts when transmitting data, set the TXIE bit only when there is more data to send. Clear the TXIE interrupt enable bit upon writing the last character of the transmission to the TXREG.

18.1.1.5 TSR Status

The TRMT bit of the TXSTA register indicates the status of the TSR register. This is a read-only bit. The TRMT bit is set when the TSR register is empty and is cleared when a character is transferred to the TSR register from the TXREG. The TRMT bit remains clear until all bits have been shifted out of the TSR register. No interrupt logic is tied to this bit, so the user needs to poll this bit to determine the TSR status.

Note:	The TSR register is not mapped in data memory, so it is not available to the user.

18.1.1.6 Transmitting 9-Bit Characters

The EUSART supports 9-bit character transmissions. When the TX9 bit of the TXSTA register is set the EUSART will shift 9 bits out for each character transmitted. The TX9D bit of the TXSTA register is the ninth, and Most Significant, data bit. When transmitting 9-bit data, the TX9D data bit must be written before writing the 8 Least Significant bits into the TXREG. All nine bits of data will be transferred to the TSR shift register immediately after the TXREG is written.

A special 9-bit Address mode is available for use with multiple receivers. See **Section 18.1.2.8 "Address Detection"** for more information on the Address mode.

18.1.1.7 Asynchronous Transmission Set-up:

1. Initialize the SPBRGH:SPBRG register pair and the BRGH and BRG16 bits to achieve the desired baud rate (see **Section 18.3 "EUSART Baud Rate Generator (BRG)"**).
2. Set the RX/DT and TX/CK TRIS controls to '1'.
3. Enable the asynchronous serial port by clearing the SYNC bit and setting the SPEN bit.
4. If 9-bit transmission is desired, set the TX9 control bit. A set ninth data bit will indicate that the 8 Least Significant data bits are an address when the receiver is set for address detection.
5. Set the CKTXP control bit if inverted transmit data polarity is desired.
6. Enable the transmission by setting the TXEN control bit. This will cause the TXIF interrupt bit to be set.
7. If interrupts are desired, set the TXIE interrupt enable bit. An interrupt will occur immediately provided that the GIE and PEIE bits of the INTCON register are also set.
8. If 9-bit transmission is selected, the ninth bit should be loaded into the TX9D data bit.
9. Load 8-bit data into the TXREG register. This will start the transmission.

FIGURE 18-3: ASYNCHRONOUS TRANSMISSION

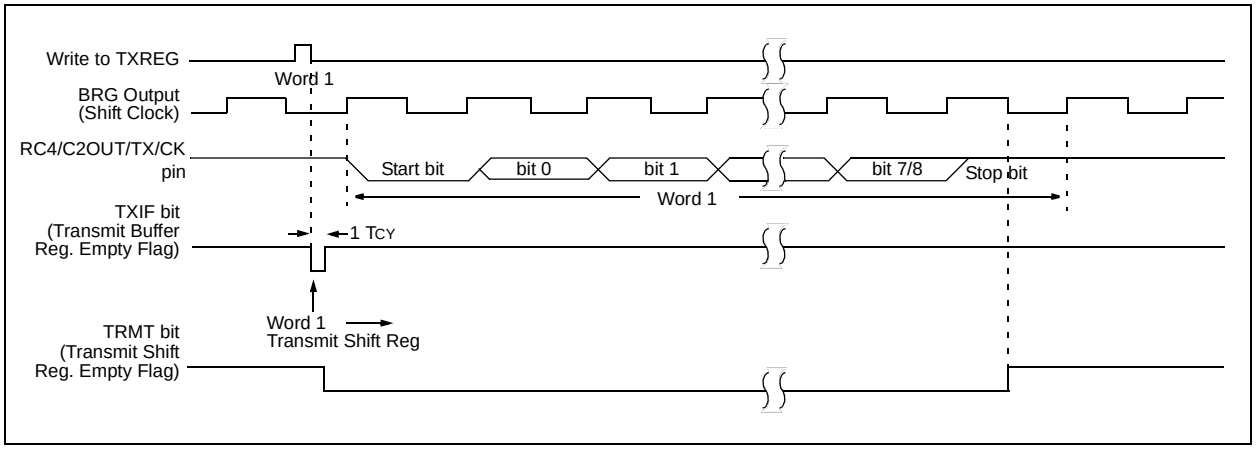

© 2010 Microchip Technology Inc.

FIGURE 18-4: ASYNCHRONOUS TRANSMISSION (BACK-TO-BACK)

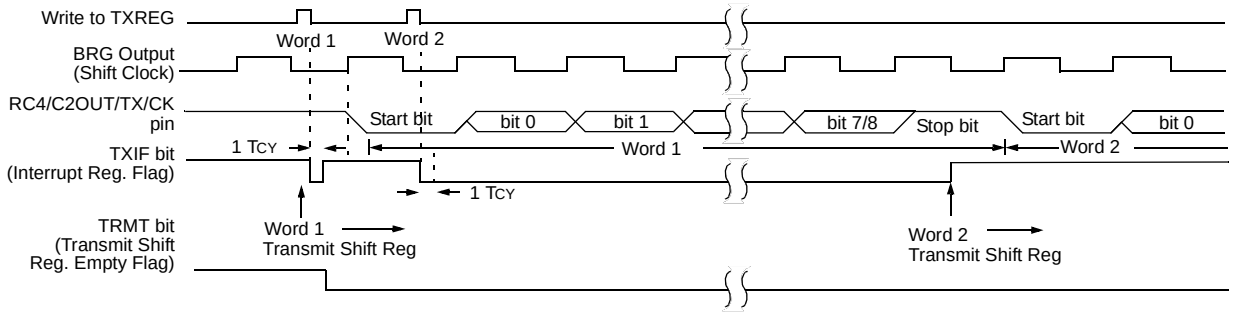

Note: This timing diagram shows two consecutive transmissions.

TABLE 18-1: REGISTERS ASSOCIATED WITH ASYNCHRONOUS TRANSMISSION

Name	Bit 7	Bit 6	Bit 5	Bit 4	Bit 3	Bit 2	Bit 1	Bit 0	Reset Values on page
INTCON	GIE/GIEH	PEIE/GIEL	TMR0IE	INT0IE	RBIE	TMR0IF	INT0IF	RBIF	59
PIR1	PSPIF(1)	ADIF	RCIF	TXIF	SSPIF	CCP1IF	TMR2IF	TMR1IF	62
PIE1	PSPIE(1)	ADIE	RCIE	TXIE	SSPIE	CCP1IE	TMR2IE	TMR1IE	62
IPR1	PSPIP(1)	ADIP	RCIP	TXIP	SSPIP	CCP1IP	TMR2IP	TMR1IP	62
RCSTA	SPEN	RX9	SREN	CREN	ADDEN	FERR	OERR	RX9D	61
TXREG	EUSART Transmit Register								61
TXSTA	CSRC	TX9	TXEN	SYNC	SENDB	BRGH	TRMT	TX9D	61
BAUDCON	ABDOVF	RCIDL	DTRXP	CKTXP	BRG16	—	WUE	ABDEN	61
SPBRGH	EUSART Baud Rate Generator Register, High Byte								61
SPBRG	EUSART Baud Rate Generator Register, Low Byte								61

Legend: — = unimplemented locations read as '0'. Shaded cells are not used for asynchronous transmission.

Note 1: Reserved in PIC18F2XK20 devices; always maintain these bits clear.

18.1.2 EUSART ASYNCHRONOUS RECEIVER

The Asynchronous mode would typically be used in RS-232 systems. The receiver block diagram is shown in Figure 18-2. The data is received on the RX/DT pin and drives the data recovery block. The data recovery block is actually a high-speed shifter operating at 16 times the baud rate, whereas the serial Receive Shift Register (RSR) operates at the bit rate. When all 8 or 9 bits of the character have been shifted in, they are immediately transferred to a two character First-In-First-Out (FIFO) memory. The FIFO buffering allows reception of two complete characters and the start of a third character before software must start servicing the EUSART receiver. The FIFO and RSR registers are not directly accessible by software. Access to the received data is via the RCREG register.

18.1.2.1 Enabling the Receiver

The EUSART receiver is enabled for asynchronous operation by configuring the following three control bits:

- CREN = 1
- SYNC = 0
- SPEN = 1

All other EUSART control bits are assumed to be in their default state.

Setting the CREN bit of the RCSTA register enables the receiver circuitry of the EUSART. Clearing the SYNC bit of the TXSTA register configures the EUSART for asynchronous operation. Setting the SPEN bit of the RCSTA register enables the EUSART. The RX/DT I/O pin must be configured as an input by setting the corresponding TRIS control bit. If the RX/DT pin is shared with an analog peripheral the analog I/O function must be disabled by clearing the corresponding ANSEL bit.

18.1.2.2 Receiving Data

The receiver data recovery circuit initiates character reception on the falling edge of the first bit. The first bit, also known as the Start bit, is always a zero. The data recovery circuit counts one-half bit time to the center of the Start bit and verifies that the bit is still a zero. If it is not a zero then the data recovery circuit aborts character reception, without generating an error, and resumes looking for the falling edge of the Start bit. If the Start bit zero verification succeeds then the data recovery circuit counts a full bit time to the center of the next bit. The bit is then sampled by a majority detect circuit and the resulting '0' or '1' is shifted into the RSR. This repeats until all data bits have been sampled and shifted into the RSR. One final bit time is measured and the level sampled. This is the Stop bit, which is always a '1'. If the data recovery circuit samples a '0' in the Stop bit position then a framing error is set for this character, otherwise the framing error is cleared for this character. See **Section 18.1.2.5 "Receive Framing Error"** for more information on framing errors.

Immediately after all data bits and the Stop bit have been received, the character in the RSR is transferred to the EUSART receive FIFO and the RCIF interrupt flag bit of the PIR1 register is set. The top character in the FIFO is transferred out of the FIFO by reading the RCREG register.

Note:	If the receive FIFO is overrun, no additional characters will be received until the overrun condition is cleared. See ***Section 18.1.2.6 "Receive Overrun Error"*** for more information on overrun errors.

18.1.2.3 Receive Data Polarity

The polarity of the receive data can be controlled with the DTRXP bit of the BAUDCON register. The default state of this bit is '0' which selects high true receive idle and data bits. Setting the DTRXP bit to '1' will invert the receive data resulting in low true idle and data bits. The DTRXP bit controls receive data polarity only in Asynchronous mode. In synchronous mode the DTRXP bit has a different function.

© 2010 Microchip Technology Inc.

18.1.2.4 Receive Interrupts

The RCIF interrupt flag bit of the PIR1 register is set whenever the EUSART receiver is enabled and there is an unread character in the receive FIFO. The RCIF interrupt flag bit is read-only, it cannot be set or cleared by software.

RCIF interrupts are enabled by setting the following bits:

- RCIE interrupt enable bit of the PIE1 register
- PEIE peripheral interrupt enable bit of the INTCON register
- GIE global interrupt enable bit of the INTCON register

The RCIF interrupt flag bit will be set when there is an unread character in the FIFO, regardless of the state of interrupt enable bits.

18.1.2.5 Receive Framing Error

Each character in the receive FIFO buffer has a corresponding framing error Status bit. A framing error indicates that a Stop bit was not seen at the expected time. The framing error status is accessed via the FERR bit of the RCSTA register. The FERR bit represents the status of the top unread character in the receive FIFO. Therefore, the FERR bit must be read before reading the RCREG.

The FERR bit is read-only and only applies to the top unread character in the receive FIFO. A framing error (FERR = 1) does not preclude reception of additional characters. It is not necessary to clear the FERR bit. Reading the next character from the FIFO buffer will advance the FIFO to the next character and the next corresponding framing error.

The FERR bit can be forced clear by clearing the SPEN bit of the RCSTA register which resets the EUSART. Clearing the CREN bit of the RCSTA register does not affect the FERR bit. A framing error by itself does not generate an interrupt.

Note:	If all receive characters in the receive FIFO have framing errors, repeated reads of the RCREG will not clear the FERR bit.

18.1.2.6 Receive Overrun Error

The receive FIFO buffer can hold two characters. An overrun error will be generated If a third character, in its entirety, is received before the FIFO is accessed. When this happens the OERR bit of the RCSTA register is set. The characters already in the FIFO buffer can be read but no additional characters will be received until the error is cleared. The error must be cleared by either clearing the CREN bit of the RCSTA register or by resetting the EUSART by clearing the SPEN bit of the RCSTA register.

18.1.2.7 Receiving 9-bit Characters

The EUSART supports 9-bit character reception. When the RX9 bit of the RCSTA register is set, the EUSART will shift 9 bits into the RSR for each character received. The RX9D bit of the RCSTA register is the ninth and Most Significant data bit of the top unread character in the receive FIFO. When reading 9-bit data from the receive FIFO buffer, the RX9D data bit must be read before reading the 8 Least Significant bits from the RCREG.

18.1.2.8 Address Detection

A special Address Detection mode is available for use when multiple receivers share the same transmission line, such as in RS-485 systems. Address detection is enabled by setting the ADDEN bit of the RCSTA register.

Address detection requires 9-bit character reception. When address detection is enabled, only characters with the ninth data bit set will be transferred to the receive FIFO buffer, thereby setting the RCIF interrupt bit. All other characters will be ignored.

Upon receiving an address character, user software determines if the address matches its own. Upon address match, user software must disable address detection by clearing the ADDEN bit before the next Stop bit occurs. When user software detects the end of the message, determined by the message protocol used, software places the receiver back into the Address Detection mode by setting the ADDEN bit.

18.1.2.9 Asynchronous Reception Set-up:

1. Initialize the SPBRGH:SPBRG register pair and the BRGH and BRG16 bits to achieve the desired baud rate (see **Section 18.3 "EUSART Baud Rate Generator (BRG)"**).
2. Set the RX/DT and TX/CK TRIS controls to '1'.
3. Enable the serial port by setting the SPEN bit and the RX/DT pin TRIS bit. The SYNC bit must be clear for asynchronous operation.
4. If interrupts are desired, set the RCIE interrupt enable bit and set the GIE and PEIE bits of the INTCON register.
5. If 9-bit reception is desired, set the RX9 bit.
6. Set the DTRXP if inverted receive polarity is desired.
7. Enable reception by setting the CREN bit.
8. The RCIF interrupt flag bit will be set when a character is transferred from the RSR to the receive buffer. An interrupt will be generated if the RCIE interrupt enable bit was also set.
9. Read the RCSTA register to get the error flags and, if 9-bit data reception is enabled, the ninth data bit.
10. Get the received 8 Least Significant data bits from the receive buffer by reading the RCREG register.
11. If an overrun occurred, clear the OERR flag by clearing the CREN receiver enable bit.

18.1.2.10 9-bit Address Detection Mode Set-up

This mode would typically be used in RS-485 systems. To set up an Asynchronous Reception with Address Detect Enable:

1. Initialize the SPBRGH, SPBRG register pair and the BRGH and BRG16 bits to achieve the desired baud rate (see **Section 18.3 "EUSART Baud Rate Generator (BRG)"**).
2. Set the RX/DT and TX/CK TRIS controls to '1'.
3. Enable the serial port by setting the SPEN bit. The SYNC bit must be clear for asynchronous operation.
4. If interrupts are desired, set the RCIE interrupt enable bit and set the GIE and PEIE bits of the INTCON register.
5. Enable 9-bit reception by setting the RX9 bit.
6. Enable address detection by setting the ADDEN bit.
7. Set the DTRXP if inverted receive polarity is desired.
8. Enable reception by setting the CREN bit.
9. The RCIF interrupt flag bit will be set when a character with the ninth bit set is transferred from the RSR to the receive buffer. An interrupt will be generated if the RCIE interrupt enable bit was also set.
10. Read the RCSTA register to get the error flags. The ninth data bit will always be set.
11. Get the received 8 Least Significant data bits from the receive buffer by reading the RCREG register. Software determines if this is the device's address.
12. If an overrun occurred, clear the OERR flag by clearing the CREN receiver enable bit.
13. If the device has been addressed, clear the ADDEN bit to allow all received data into the receive buffer and generate interrupts.

© 2010 Microchip Technology Inc.

FIGURE 18-5: ASYNCHRONOUS RECEPTION

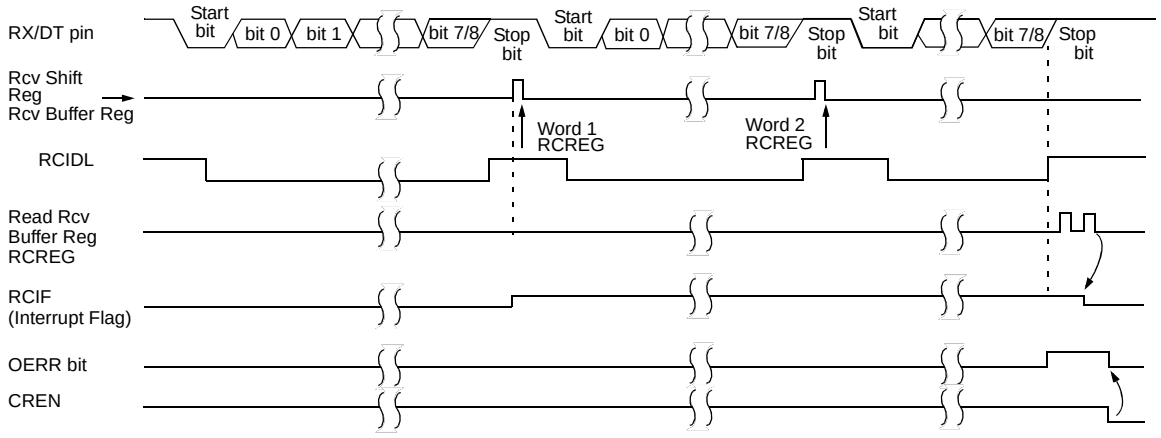

Note: This timing diagram shows three words appearing on the RX input. The RCREG (receive buffer) is read after the third word, causing the OERR (overrun) bit to be set.

TABLE 18-2: REGISTERS ASSOCIATED WITH ASYNCHRONOUS RECEPTION

Name	Bit 7	Bit 6	Bit 5	Bit 4	Bit 3	Bit 2	Bit 1	Bit 0	Reset Values on page
INTCON	GIE/GIEH	PEIE/GIEL	TMR0IE	INT0IE	RBIE	TMR0IF	INT0IF	RBIF	59
PIR1	PSPIF(1)	ADIF	RCIF	TXIF	SSPIF	CCP1IF	TMR2IF	TMR1IF	62
PIE1	PSPIE(1)	ADIE	RCIE	TXIE	SSPIE	CCP1IE	TMR2IE	TMR1IE	62
IPR1	PSPIP(1)	ADIP	RCIP	TXIP	SSPIP	CCP1IP	TMR2IP	TMR1IP	62
RCSTA	SPEN	RX9	SREN	CREN	ADDEN	FERR	OERR	RX9D	61
RCREG	EUSART Receive Register								61
TRISC	TRISC7	TRISC6	TRISC5	TRISC4	TRISC3	TRISC2	TRISC1	TRISC0	62
TXSTA	CSRC	TX9	TXEN	SYNC	SENDB	BRGH	TRMT	TX9D	61
BAUDCON	ABDOVF	RCIDL	DTRXP	CKTXP	BRG16	—	WUE	ABDEN	61
SPBRGH	EUSART Baud Rate Generator Register, High Byte								61
SPBRG	EUSART Baud Rate Generator Register, Low Byte								61

Legend: — = unimplemented locations read as '0'. Shaded cells are not used for asynchronous reception.

Note 1: Reserved in PIC18F2XK20 devices; always maintain these bits clear.

18.2 Clock Accuracy with Asynchronous Operation

The factory calibrates the internal oscillator block output (HFINTOSC). However, the HFINTOSC frequency may drift as VDD or temperature changes, and this directly affects the asynchronous baud rate. Two methods may be used to adjust the baud rate clock, but both require a reference clock source of some kind.

The first (preferred) method uses the OSCTUNE register to adjust the HFINTOSC output. Adjusting the value in the OSCTUNE register allows for fine resolution changes to the system clock source. See **Section 2.5 "Internal Clock Modes"** for more information.

The other method adjusts the value in the Baud Rate Generator. This can be done automatically with the Auto-Baud Detect feature (see **Section 18.3.1 "Auto-Baud Detect"**). There may not be fine enough resolution when adjusting the Baud Rate Generator to compensate for a gradual change in the peripheral clock frequency.

REGISTER 18-1: TXSTA: TRANSMIT STATUS AND CONTROL REGISTER

R/W-0	R/W-0	R/W-0	R/W-0	R/W-0	R/W-0	R-1	R/W-0
CSRC	TX9	TXEN(1)	SYNC	SENDB	BRGH	TRMT	TX9D
bit 7							bit 0

Legend:			
R = Readable bit	W = Writable bit	U = Unimplemented bit, read as '0'	
-n = Value at POR	'1' = Bit is set	'0' = Bit is cleared	x = Bit is unknown

bit 7 **CSRC:** Clock Source Select bit
Asynchronous mode:
Don't care
Synchronous mode:
1 = Master mode (clock generated internally from BRG)
0 = Slave mode (clock from external source)

bit 6 **TX9:** 9-bit Transmit Enable bit
1 = Selects 9-bit transmission
0 = Selects 8-bit transmission

bit 5 **TXEN:** Transmit Enable bit(1)
1 = Transmit enabled
0 = Transmit disabled

bit 4 **SYNC:** EUSART Mode Select bit
1 = Synchronous mode
0 = Asynchronous mode

bit 3 **SENDB:** Send Break Character bit
Asynchronous mode:
1 = Send Sync Break on next transmission (cleared by hardware upon completion)
0 = Sync Break transmission completed
Synchronous mode:
Don't care

bit 2 **BRGH:** High Baud Rate Select bit
Asynchronous mode:
1 = High speed
0 = Low speed
Synchronous mode:
Unused in this mode

bit 1 **TRMT:** Transmit Shift Register Status bit
1 = TSR empty
0 = TSR full

bit 0 **TX9D:** Ninth bit of Transmit Data
Can be address/data bit or a parity bit.

Note 1: SREN/CREN overrides TXEN in Sync mode.

© 2010 Microchip Technology Inc.

REGISTER 18-2: RCSTA: RECEIVE STATUS AND CONTROL REGISTER(1)

R/W-0	R/W-0	R/W-0	R/W-0	R/W-0	R-0	R-0	R-x
SPEN	RX9	SREN	CREN	ADDEN	FERR	OERR	RX9D
bit 7							bit 0

Legend:			
R = Readable bit	W = Writable bit	U = Unimplemented bit, read as '0'	
-n = Value at POR	'1' = Bit is set	'0' = Bit is cleared	x = Bit is unknown

bit 7 **SPEN:** Serial Port Enable bit

1 = Serial port enabled (configures RX/DT and TX/CK pins as serial port pins)
0 = Serial port disabled (held in Reset)

bit 6 **RX9:** 9-bit Receive Enable bit

1 = Selects 9-bit reception
0 = Selects 8-bit reception

bit 5 **SREN:** Single Receive Enable bit

Asynchronous mode:

Don't care

Synchronous mode – Master:

1 = Enables single receive
0 = Disables single receive
This bit is cleared after reception is complete.

Synchronous mode – Slave

Don't care

bit 4 **CREN:** Continuous Receive Enable bit

Asynchronous mode:

1 = Enables receiver
0 = Disables receiver

Synchronous mode:

1 = Enables continuous receive until enable bit CREN is cleared (CREN overrides SREN)
0 = Disables continuous receive

bit 3 **ADDEN:** Address Detect Enable bit

Asynchronous mode 9-bit (RX9 = 1):

1 = Enables address detection, enable interrupt and load the receive buffer when RSR<8> is set
0 = Disables address detection, all bytes are received and ninth bit can be used as parity bit

Asynchronous mode 8-bit (RX9 = 0):

Don't care

bit 2 **FERR:** Framing Error bit

1 = Framing error (can be updated by reading RCREG register and receive next valid byte)
0 = No framing error

bit 1 **OERR:** Overrun Error bit

1 = Overrun error (can be cleared by clearing bit CREN)
0 = No overrun error

bit 0 **RX9D:** Ninth bit of Received Data

This can be address/data bit or a parity bit and must be calculated by user firmware.

REGISTER 18-3: BAUDCON: BAUD RATE CONTROL REGISTER

R/W-0	R-1	R/W-0	R/W-0	R/W-0	U-0	R/W-0	R/W-0
ABDOVF	RCIDL	DTRXP	CKTXP	BRG16	—	WUE	ABDEN
bit 7							bit 0

Legend:			
R = Readable bit	W = Writable bit	U = Unimplemented bit, read as '0'	
-n = Value at POR	'1' = Bit is set	'0' = Bit is cleared	x = Bit is unknown

bit 7 **ABDOVF:** Auto-Baud Detect Overflow bit
Asynchronous mode:
1 = Auto-baud timer overflowed
0 = Auto-baud timer did not overflow
Synchronous mode:
Don't care

bit 6 **RCIDL**: Receive Idle Flag bit
Asynchronous mode:
1 = Receiver is Idle
0 = Start bit has been detected and the receiver is active
Synchronous mode:
Don't care

bit 5 **DTRXP**: Data/Receive Polarity Select bit
Asynchronous mode:
1 = Receive data (RX) is inverted (active-low)
0 = Receive data (RX) is not inverted (active-high)
Synchronous mode:
1 = Data (DT) is inverted (active-low)
0 = Data (DT) is not inverted (active-high)

bit 4 **CKTXP**: Clock/Transmit Polarity Select bit
Asynchronous mode:
1 = Idle state for transmit (TX) is low
0 = Idle state for transmit (TX) is high
Synchronous mode:
1 = Data changes on the falling edge of the clock and is sampled on the rising edge of the clock
0 = Data changes on the rising edge of the clock and is sampled on the falling edge of the clock

bit 3 **BRG16:** 16-bit Baud Rate Generator bit
1 = 16-bit Baud Rate Generator is used (SPBRGH:SPBRG)
0 = 8-bit Baud Rate Generator is used (SPBRG)

bit 2 **Unimplemented:** Read as '0'

bit 1 **WUE:** Wake-up Enable bit
Asynchronous mode:
1 = Receiver is waiting for a falling edge. No character will be received but RCIF will be set on the falling edge. WUE will automatically clear on the rising edge.
0 = Receiver is operating normally
Synchronous mode:
Don't care

bit 0 **ABDEN**: Auto-Baud Detect Enable bit
Asynchronous mode:
1 = Auto-Baud Detect mode is enabled (clears when auto-baud is complete)
0 = Auto-Baud Detect mode is disabled
Synchronous mode:
Don't care

© 2010 Microchip Technology Inc.

18.3 EUSART Baud Rate Generator (BRG)

The Baud Rate Generator (BRG) is an 8-bit or 16-bit timer that is dedicated to the support of both the asynchronous and synchronous EUSART operation. By default, the BRG operates in 8-bit mode. Setting the BRG16 bit of the BAUDCON register selects 16-bit mode.

The SPBRGH:SPBRG register pair determines the period of the free running baud rate timer. In Asynchronous mode the multiplier of the baud rate period is determined by both the BRGH bit of the TXSTA register and the BRG16 bit of the BAUDCON register. In Synchronous mode, the BRGH bit is ignored.

Table 18-3 contains the formulas for determining the baud rate. Example 18-1 provides a sample calculation for determining the baud rate and baud rate error.

Typical baud rates and error values for various asynchronous modes have been computed for your convenience and are shown in Table 18-5. It may be advantageous to use the high baud rate (BRGH = 1), or the 16-bit BRG (BRG16 = 1) to reduce the baud rate error. The 16-bit BRG mode is used to achieve slow baud rates for fast oscillator frequencies.

Writing a new value to the SPBRGH, SPBRG register pair causes the BRG timer to be reset (or cleared). This ensures that the BRG does not wait for a timer overflow before outputting the new baud rate.

If the system clock is changed during an active receive operation, a receive error or data loss may result. To avoid this problem, check the status of the RCIDL bit to make sure that the receive operation is Idle before changing the system clock.

EXAMPLE 18-1: CALCULATING BAUD RATE ERROR

For a device with FOSC of 16 MHz, desired baud rate of 9600, Asynchronous mode, 8-bit BRG:

$$Desired\ Baud\ Rate = \frac{FOSC}{64([SPBRGH:SPBRG] + 1)}$$

Solving for SPBRGH:SPBRG:

$$X = \frac{\frac{FOSC}{Desired\ Baud\ Rate}}{64} - 1$$

$$= \frac{\frac{16000000}{9600}}{64} - 1$$

$$= [25.042] = 25$$

$$Calculated\ Baud\ Rate = \frac{16000000}{64(25 + 1)}$$

$$= 9615$$

$$Error = \frac{Calc.\ Baud\ Rate - Desired\ Baud\ Rate}{Desired\ Baud\ Rate}$$

$$= \frac{(9615 - 9600)}{9600} = 0.16\%$$

TABLE 18-3: BAUD RATE FORMULAS

Configuration Bits			BRG/EUSART Mode	Baud Rate Formula
SYNC	BRG16	BRGH		
0	0	0	8-bit/Asynchronous	FOSC/[64 (n+1)]
0	0	1	8-bit/Asynchronous	FOSC/[16 (n+1)]
0	1	0	16-bit/Asynchronous	
0	1	1	16-bit/Asynchronous	FOSC/[4 (n+1)]
1	0	x	8-bit/Synchronous	
1	1	x	16-bit/Synchronous	

Legend: x = Don't care, n = value of SPBRGH, SPBRG register pair

TABLE 18-4: REGISTERS ASSOCIATED WITH BAUD RATE GENERATOR

Name	Bit 7	Bit 6	Bit 5	Bit 4	Bit 3	Bit 2	Bit 1	Bit 0	Reset Values on page
TXSTA	CSRC	TX9	TXEN	SYNC	SENDB	BRGH	TRMT	TX9D	61
RCSTA	SPEN	RX9	SREN	CREN	ADDEN	FERR	OERR	RX9D	61
BAUDCON	ABDOVF	RCIDL	DTRXP	CKTXP	BRG16	—	WUE	ABDEN	61
SPBRGH	EUSART Baud Rate Generator Register, High Byte								61
SPBRG	EUSART Baud Rate Generator Register, Low Byte								61

Legend: — = unimplemented, read as '0'. Shaded cells are not used by the BRG.

TABLE 18-5: BAUD RATES FOR ASYNCHRONOUS MODES

BAUD RATE	SYNC = 0, BRGH = 0, BRG16 = 0											
	FOSC = 64.000 MHz			FOSC = 18.432 MHz			FOSC = 16.000 MHz			FOSC = 11.0592 MHz		
	Actual Rate	% Error	SPBRG value (decimal)	Actual Rate	% Error	SPBRG value (decimal)	Actual Rate	% Error	SPBRG value (decimal)	Actual Rate	% Error	SPBRG value (decimal)
300	—	—	—	—	—	—	—	—	—	—	—	—
1200	—	—	—	1200	0.00	239	1202	0.16	207	1200	0.00	143
2400	—	—	—	2400	0.00	119	2404	0.16	103	2400	0.00	71
9600	9615	0.16	103	9600	0.00	29	9615	0.16	25	9600	0.00	17
10417	10417	0.00	95	10286	-1.26	27	10417	0.00	23	10165	-2.42	16
19.2k	19.23k	0.16	51	19.20k	0.00	14	19.23k	0.16	12	19.20k	0.00	8
57.6k	58.82k	2.12	16	57.60k	0.00	7	—	—	—	57.60k	0.00	2
115.2k	111.11k	-3.55	8	—	—	—	—	—	—	—	—	—

BAUD RATE	SYNC = 0, BRGH = 0, BRG16 = 0											
	FOSC = 8.000 MHz			FOSC = 4.000 MHz			FOSC = 3.6864 MHz			FOSC = 1.000 MHz		
	Actual Rate	% Error	SPBRG value (decimal)	Actual Rate	% Error	SPBRG value (decimal)	Actual Rate	% Error	SPBRG value (decimal)	Actual Rate	% Error	SPBRG value (decimal)
300	—	—	—	300	0.16	207	300	0.00	191	300	0.16	51
1200	1202	0.16	103	1202	0.16	51	1200	0.00	47	1202	0.16	12
2400	2404	0.16	51	2404	0.16	25	2400	0.00	23	—	—	—
9600	9615	0.16	12	—	—	—	9600	0.00	5	—	—	—
10417	10417	0.00	11	10417	0.00	5	—	—	—	—	—	—
19.2k	—	—	—	—	—	—	19.20k	0.00	2	—	—	—
57.6k	—	—	—	—	—	—	57.60k	0.00	0	—	—	—
115.2k	—	—	—	—	—	—	—	—	—	—	—	—

BAUD RATE	SYNC = 0, BRGH = 1, BRG16 = 0											
	FOSC = 64.000 MHz			FOSC = 18.432 MHz			FOSC = 16.000 MHz			FOSC = 11.0592 MHz		
	Actual Rate	% Error	SPBRG value (decimal)	Actual Rate	% Error	SPBRG value (decimal)	Actual Rate	% Error	SPBRG value (decimal)	Actual Rate	% Error	SPBRG value (decimal)
300	—	—	—	—	—	—	—	—	—	—	—	—
1200	—	—	—	—	—	—	—	—	—	—	—	—
2400	—	—	—	—	—	—	—	—	—	—	—	—
9600	—	—	—	9600	0.00	119	9615	0.16	103	9600	0.00	71
10417	—	—	—	10378	-0.37	110	10417	0.00	95	10473	0.53	65
19.2k	19.23k	0.16	207	19.20k	0.00	59	19.23k	0.16	51	19.20k	0.00	35
57.6k	57.97k	0.64	68	57.60k	0.00	19	58.82k	2.12	16	57.60k	0.00	11
115.2k	114.29k	-0.79	34	115.2k	0.00	9	111.1k	-3.55	8	115.2k	0.00	5

© 2010 Microchip Technology Inc.

TABLE 18-5: BAUD RATES FOR ASYNCHRONOUS MODES (CONTINUED)

BAUD RATE	SYNC = 0, BRGH = 1, BRG16 = 0											
	FOSC = 8.000 MHz			FOSC = 4.000 MHz			FOSC = 3.6864 MHz			FOSC = 1.000 MHz		
	Actual Rate	% Error	SPBRG value (decimal)	Actual Rate	% Error	SPBRG value (decimal)	Actual Rate	% Error	SPBRG value (decimal)	Actual Rate	% Error	SPBRG value (decimal)
300	—	—	—	—	—	—	—	—	—	300	0.16	207
1200	—	—	—	1202	0.16	207	1200	0.00	191	1202	0.16	51
2400	2404	0.16	207	2404	0.16	103	2400	0.00	95	2404	0.16	25
9600	9615	0.16	51	9615	0.16	25	9600	0.00	23	—	—	—
10417	10417	0.00	47	10417	0.00	23	10473	0.53	21	10417	0.00	5
19.2k	19231	0.16	25	19.23k	0.16	12	19.2k	0.00	11	—	—	—
57.6k	55556	-3.55	8	—	—	—	57.60k	0.00	3	—	—	—
115.2k	—	—	—	—	—	—	115.2k	0.00	1	—	—	—

BAUD RATE	SYNC = 0, BRGH = 0, BRG16 = 1											
	FOSC = 64.000 MHz			FOSC = 18.432 MHz			FOSC = 16.000 MHz			FOSC = 11.0592 MHz		
	Actual Rate	% Error	SPBRGH :SPBRG (decimal)	Actual Rate	% Error	SPBRGH :SPBRG (decimal)	Actual Rate	% Error	SPBRGH :SPBRG (decimal)	Actual Rate	% Error	SPBRGH :SPBRG (decimal)
300	300.0	0.00	13332	300.0	0.00	3839	300.03	0.01	3332	300.0	0.00	2303
1200	1200.1	0.01	3332	1200	0.00	959	1200.5	0.04	832	1200	0.00	575
2400	2399	-0.02	1666	2400	0.00	479	2398	-0.08	416	2400	0.00	287
9600	9592	-0.08	416	9600	0.00	119	9615	0.16	103	9600	0.00	71
10417	10417	0.00	383	10378	-0.37	110	10417	0.00	95	10473	0.53	65
19.2k	19.23k	0.16	207	19.20k	0.00	59	19.23k	0.16	51	19.20k	0.00	35
57.6k	57.97k	0.64	68	57.60k	0.00	19	58.82k	2.12	16	57.60k	0.00	11
115.2k	114.29k	-0.79	34	115.2k	0.00	9	111.11k	-3.55	8	115.2k	0.00	5

BAUD RATE	SYNC = 0, BRGH = 0, BRG16 = 1											
	FOSC = 8.000 MHz			FOSC = 4.000 MHz			FOSC = 3.6864 MHz			FOSC = 1.000 MHz		
	Actual Rate	% Error	SPBRGH :SPBRG (decimal)	Actual Rate	% Error	SPBRGH :SPBRG (decimal)	Actual Rate	% Error	SPBRGH :SPBRG (decimal)	Actual Rate	% Error	SPBRGH :SPBRG (decimal)
300	299.9	-0.02	1666	300.1	0.04	832	300.0	0.00	767	300.5	0.16	207
1200	1199	-0.08	416	1202	0.16	207	1200	0.00	191	1202	0.16	51
2400	2404	0.16	207	2404	0.16	103	2400	0.00	95	2404	0.16	25
9600	9615	0.16	51	9615	0.16	25	9600	0.00	23	—	—	—
10417	10417	0.00	47	10417	0.00	23	10473	0.53	21	10417	0.00	5
19.2k	19.23k	0.16	25	19.23k	0.16	12	19.20k	0.00	11	—	—	—
57.6k	55556	-3.55	8	—	—	—	57.60k	0.00	3	—	—	—
115.2k	—	—	—	—	—	—	115.2k	0.00	1	—	—	—

TABLE 18-5: BAUD RATES FOR ASYNCHRONOUS MODES (CONTINUED)

BAUD RATE	SYNC = 0, BRGH = 1, BRG16 = 1 or SYNC = 1, BRG16 = 1											
	FOSC = 64.000 MHz			FOSC = 18.432 MHz			FOSC = 16.000 MHz			FOSC = 11.0592 MHz		
	Actual Rate	% Error	SPBRGH :SPBRG (decimal)	Actual Rate	% Error	SPBRGH :SPBRG (decimal)	Actual Rate	% Error	SPBRGH :SPBRG (decimal)	Actual Rate	% Error	SPBRGH :SPBRG (decimal)
300	300	0.00	53332	300.0	0.00	15359	300.0	0.00	13332	300.0	0.00	9215
1200	1200	0.00	13332	1200	0.00	3839	1200.1	0.01	3332	1200	0.00	2303
2400	2400	0.00	6666	2400	0.00	1919	2399.5	-0.02	1666	2400	0.00	1151
9600	9598.1	-0.02	1666	9600	0.00	479	9592	-0.08	416	9600	0.00	287
10417	10417	0.00	1535	10425	0.08	441	10417	0.00	383	10433	0.16	264
19.2k	19.21k	0.04	832	19.20k	0.00	239	19.23k	0.16	207	19.20k	0.00	143
57.6k	57.55k	-0.08	277	57.60k	0.00	79	57.97k	0.64	68	57.60k	0.00	47
115.2k	115.11k	-0.08	138	115.2k	0.00	39	114.29k	-0.79	34	115.2k	0.00	23

BAUD RATE	SYNC = 0, BRGH = 1, BRG16 = 1 or SYNC = 1, BRG16 = 1											
	FOSC = 8.000 MHz			FOSC = 4.000 MHz			FOSC = 3.6864 MHz			FOSC = 1.000 MHz		
	Actual Rate	% Error	SPBRGH :SPBRG (decimal)	Actual Rate	% Error	SPBRGH :SPBRG (decimal)	Actual Rate	% Error	SPBRGH :SPBRG (decimal)	Actual Rate	% Error	SPBRGH :SPBRG (decimal)
300	300.0	0.00	6666	300.0	0.01	3332	300.0	0.00	3071	300.1	0.04	832
1200	1200	-0.02	1666	1200	0.04	832	1200	0.00	767	1202	0.16	207
2400	2401	0.04	832	2398	0.08	416	2400	0.00	383	2404	0.16	103
9600	9615	0.16	207	9615	0.16	103	9600	0.00	95	9615	0.16	25
10417	10417	0.00	191	10417	0.00	95	10473	0.53	87	10417	0.00	23
19.2k	19.23k	0.16	103	19.23k	0.16	51	19.20k	0.00	47	19.23k	0.16	12
57.6k	57.14k	-0.79	34	58.82k	2.12	16	57.60k	0.00	15	—	—	—
115.2k	117.6k	2.12	16	111.1k	-3.55	8	115.2k	0.00	7	—	—	—

© 2010 Microchip Technology Inc.

18.3.1 AUTO-BAUD DETECT

The EUSART module supports automatic detection and calibration of the baud rate.

In the Auto-Baud Detect (ABD) mode, the clock to the BRG is reversed. Rather than the BRG clocking the incoming RX signal, the RX signal is timing the BRG. The Baud Rate Generator is used to time the period of a received 55h (ASCII "U") which is the Sync character for the LIN bus. The unique feature of this character is that it has five rising edges including the Stop bit edge.

Setting the ABDEN bit of the BAUDCON register starts the auto-baud calibration sequence (Figure 18.3.2). While the ABD sequence takes place, the EUSART state machine is held in Idle. On the first rising edge of the receive line, after the Start bit, the SPBRG begins counting up using the BRG counter clock as shown in Table 18-6. The fifth rising edge will occur on the RX pin at the end of the eighth bit period. At that time, an accumulated value totaling the proper BRG period is left in the SPBRGH:SPBRG register pair, the ABDEN bit is automatically cleared, and the RCIF interrupt flag is set. A read operation on the RCREG needs to be performed to clear the RCIF interrupt. RCREG content should be discarded. When calibrating for modes that do not use the SPBRGH register the user can verify that the SPBRG register did not overflow by checking for 00h in the SPBRGH register.

The BRG auto-baud clock is determined by the BRG16 and BRGH bits as shown in Table 18-6. During ABD, both the SPBRGH and SPBRG registers are used as a 16-bit counter, independent of the BRG16 bit setting. While calibrating the baud rate period, the SPBRGH and SPBRG registers are clocked at 1/8th the BRG base clock rate. The resulting byte measurement is the average bit time when clocked at full speed.

Note 1:	If the WUE bit is set with the ABDEN bit, auto-baud detection will occur on the byte following the Break character (see **Section 18.3.3 "Auto-Wake-up on Break"**).
2:	It is up to the user to determine that the incoming character baud rate is within the range of the selected BRG clock source. Some combinations of oscillator frequency and EUSART baud rates are not possible.
3:	During the auto-baud process, the auto-baud counter starts counting at 1. Upon completion of the auto-baud sequence, to achieve maximum accuracy, subtract 1 from the SPBRGH:SPBRG register pair.

TABLE 18-6: BRG COUNTER CLOCK RATES

BRG16	BRGH	BRG Base Clock	BRG ABD Clock
0	0	FOSC/64	FOSC/512
0	1	FOSC/16	FOSC/128
1	0	FOSC/16	FOSC/128
1	1	FOSC/4	FOSC/32

Note: During the ABD sequence, SPBRG and SPBRGH registers are both used as a 16-bit counter, independent of BRG16 setting.

FIGURE 18-6: AUTOMATIC BAUD RATE CALIBRATION

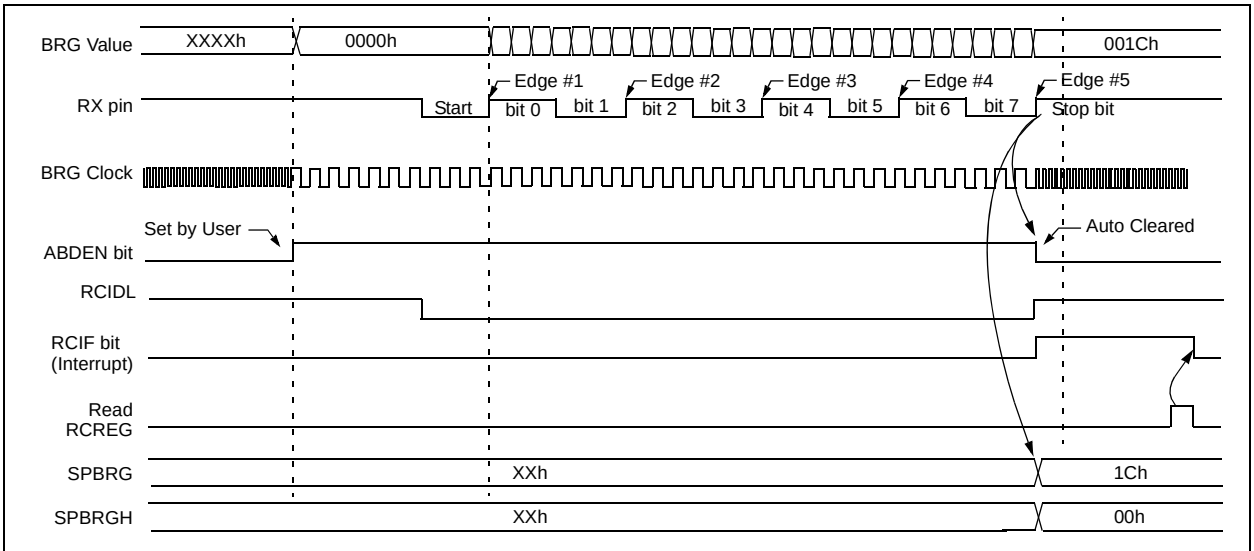

Note 1: The ABD sequence requires the **EUSART** module to be configured in Asynchronous mode.

18.3.2 AUTO-BAUD OVERFLOW

During the course of automatic baud detection, the ABDOVF bit of the BAUDCON register will be set if the baud rate counter overflows before the fifth rising edge is detected on the RX pin. The ABDOVF bit indicates that the counter has exceeded the maximum count that can fit in the 16 bits of the SPBRGH:SPBRG register pair. After the ABDOVF has been set, the counter continues to count until the fifth rising edge is detected on the RX pin. Upon detecting the fifth RX edge, the hardware will set the RCIF interrupt flag and clear the ABDEN bit of the BAUDCON register. The RCIF flag can be subsequently cleared by reading the RCREG. The ABDOVF flag can be cleared by software directly.

To terminate the auto-baud process before the RCIF flag is set, clear the ABDEN bit then clear the ABDOVF bit. The ABDOVF bit will remain set if the ABDEN bit is not cleared first.

18.3.3 AUTO-WAKE-UP ON BREAK

During Sleep mode, all clocks to the EUSART are suspended. Because of this, the Baud Rate Generator is inactive and a proper character reception cannot be performed. The Auto-Wake-up feature allows the controller to wake-up due to activity on the RX/DT line. This feature is available only in Asynchronous mode.

The Auto-Wake-up feature is enabled by setting the WUE bit of the BAUDCON register. Once set, the normal receive sequence on RX/DT is disabled, and the EUSART remains in an Idle state, monitoring for a wake-up event independent of the CPU mode. A wake-up event consists of a high-to-low transition on the RX/DT line. (This coincides with the start of a Sync Break or a wake-up signal character for the LIN protocol.)

The EUSART module generates an RCIF interrupt coincident with the wake-up event. The interrupt is generated synchronously to the Q clocks in normal CPU operating modes (Figure 18-7), and asynchronously if the device is in Sleep mode (Figure 18-8). The interrupt condition is cleared by reading the RCREG register.

The WUE bit is automatically cleared by the low-to-high transition on the RX line at the end of the Break. This signals to the user that the Break event is over. At this point, the EUSART module is in Idle mode waiting to receive the next character.

18.3.3.1 Special Considerations

Break Character

To avoid character errors or character fragments during a wake-up event, the wake-up character must be all zeros.

When the wake-up is enabled the function works independent of the low time on the data stream. If the WUE bit is set and a valid non-zero character is received, the low time from the Start bit to the first rising edge will be interpreted as the wake-up event. The remaining bits in the character will be received as a fragmented character and subsequent characters can result in framing or overrun errors.

Therefore, the initial character in the transmission must be all '0's. This must be 10 or more bit times, 13-bit times recommended for LIN bus, or any number of bit times for standard RS-232 devices.

Oscillator Startup Time

Oscillator start-up time must be considered, especially in applications using oscillators with longer start-up intervals (i.e., LP, XT or HS/PLL mode). The Sync Break (or wake-up signal) character must be of sufficient length, and be followed by a sufficient interval, to allow enough time for the selected oscillator to start and provide proper initialization of the EUSART.

WUE Bit

The wake-up event causes a receive interrupt by setting the RCIF bit. The WUE bit is cleared by hardware by a rising edge on RX/DT. The interrupt condition is then cleared by software by reading the RCREG register and discarding its contents.

To ensure that no actual data is lost, check the RCIDL bit to verify that a receive operation is not in process before setting the WUE bit. If a receive operation is not occurring, the WUE bit may then be set just prior to entering the Sleep mode.

© 2010 Microchip Technology Inc.

FIGURE 18-7: AUTO-WAKE-UP BIT (WUE) TIMING DURING NORMAL OPERATION

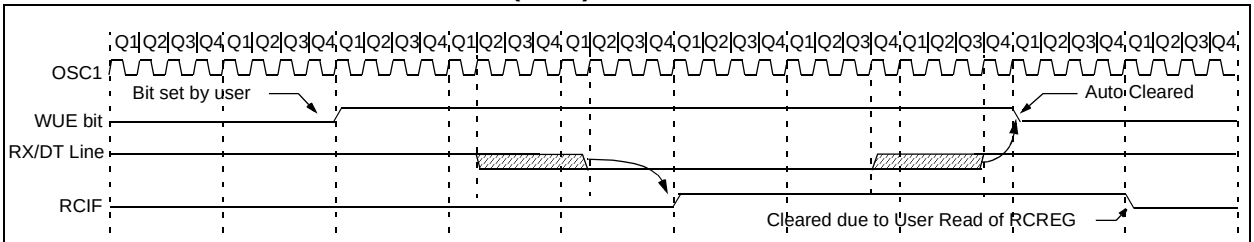

Note 1: The **EUSART** remains in Idle while the WUE bit is set.

FIGURE 18-8: AUTO-WAKE-UP BIT (WUE) TIMINGS DURING SLEEP

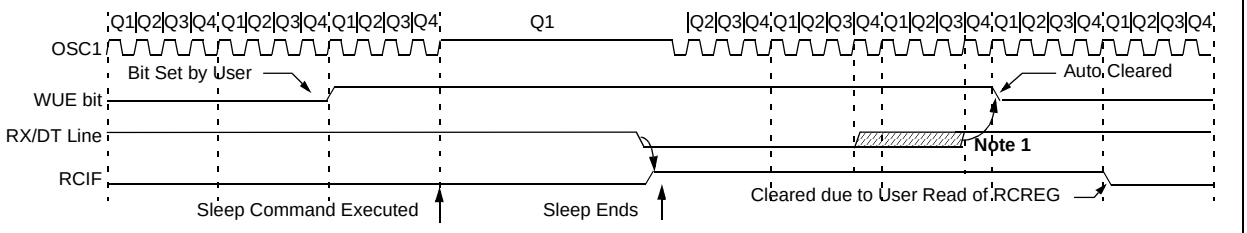

Note 1: If the wake-up event requires long oscillator warm-up time, the automatic clearing of the WUE bit can occur while the `stposc` signal is still active. This sequence should not depend on the presence of Q clocks.

2: The **EUSART** remains in Idle while the WUE bit is set.

18.3.4 BREAK CHARACTER SEQUENCE

The EUSART module has the capability of sending the special Break character sequences that are required by the LIN bus standard. A Break character consists of a Start bit, followed by 12 '0' bits and a Stop bit.

To send a Break character, set the SENDB and TXEN bits of the TXSTA register. The Break character transmission is then initiated by a write to the TXREG. The value of data written to TXREG will be ignored and all '0's will be transmitted.

The SENDB bit is automatically reset by hardware after the corresponding Stop bit is sent. This allows the user to preload the transmit FIFO with the next transmit byte following the Break character (typically, the Sync character in the LIN specification).

The TRMT bit of the TXSTA register indicates when the transmit operation is active or Idle, just as it does during normal transmission. See Figure 18-9 for the timing of the Break character sequence.

18.3.4.1 Break and Sync Transmit Sequence

The following sequence will start a message frame header made up of a Break, followed by an auto-baud Sync byte. This sequence is typical of a LIN bus master.

1. Configure the EUSART for the desired mode.
2. Set the TXEN and SENDB bits to enable the Break sequence.
3. Load the TXREG with a dummy character to initiate transmission (the value is ignored).
4. Write '55h' to TXREG to load the Sync character into the transmit FIFO buffer.
5. After the Break has been sent, the SENDB bit is reset by hardware and the Sync character is then transmitted.

When the TXREG becomes empty, as indicated by the TXIF, the next data byte can be written to TXREG.

18.3.5 RECEIVING A BREAK CHARACTER

The Enhanced EUSART module can receive a Break character in two ways.

The first method to detect a Break character uses the FERR bit of the RCSTA register and the Received data as indicated by RCREG. The Baud Rate Generator is assumed to have been initialized to the expected baud rate.

A Break character has been received when;

- RCIF bit is set
- FERR bit is set
- RCREG = 00h

The second method uses the Auto-Wake-up feature described in **Section 18.3.3 "Auto-Wake-up on Break"**. By enabling this feature, the EUSART will sample the next two transitions on RX/DT, cause an RCIF interrupt, and receive the next data byte followed by another interrupt.

Note that following a Break character, the user will typically want to enable the Auto-Baud Detect feature. For both methods, the user can set the ABDEN bit of the BAUDCON register before placing the EUSART in Sleep mode.

FIGURE 18-9: SEND BREAK CHARACTER SEQUENCE

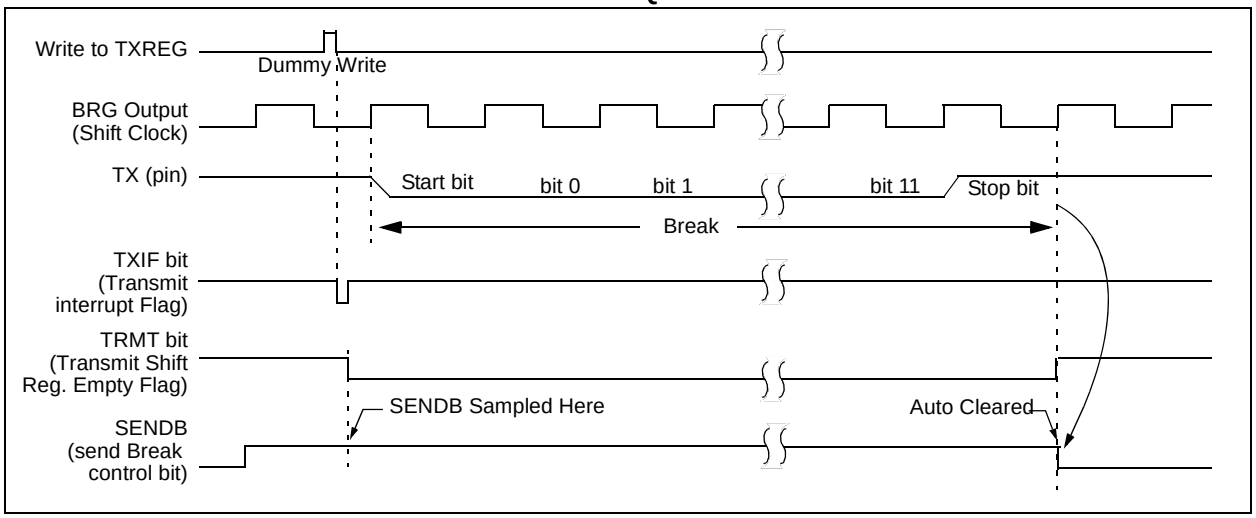

© 2010 Microchip Technology Inc.

18.4 EUSART Synchronous Mode

Synchronous serial communications are typically used in systems with a single master and one or more slaves. The master device contains the necessary circuitry for baud rate generation and supplies the clock for all devices in the system. Slave devices can take advantage of the master clock by eliminating the internal clock generation circuitry.

There are two signal lines in Synchronous mode: a bidirectional data line and a clock line. Slaves use the external clock supplied by the master to shift the serial data into and out of their respective receive and transmit shift registers. Since the data line is bidirectional, synchronous operation is half-duplex only. Half-duplex refers to the fact that master and slave devices can receive and transmit data but not both simultaneously. The EUSART can operate as either a master or slave device.

Start and Stop bits are not used in synchronous transmissions.

18.4.1 SYNCHRONOUS MASTER MODE

The following bits are used to configure the EUSART for Synchronous Master operation:

- SYNC = 1
- CSRC = 1
- SREN = 0 (for transmit); SREN = 1 (for receive)
- CREN = 0 (for transmit); CREN = 1 (for receive)
- SPEN = 1

Setting the SYNC bit of the TXSTA register configures the device for synchronous operation. Setting the CSRC bit of the TXSTA register configures the device as a master. Clearing the SREN and CREN bits of the RCSTA register ensures that the device is in the Transmit mode, otherwise the device will be configured to receive. Setting the SPEN bit of the RCSTA register enables the EUSART. If the RX/DT or TX/CK pins are shared with an analog peripheral the analog I/O functions must be disabled by clearing the corresponding ANSEL bits.

The TRIS bits corresponding to the RX/DT and TX/CK pins should be set.

18.4.1.1 Master Clock

Synchronous data transfers use a separate clock line, which is synchronous with the data. A device configured as a master transmits the clock on the TX/CK line. The TX/CK pin output driver is automatically enabled when the EUSART is configured for synchronous transmit or receive operation. Serial data bits change on the leading edge to ensure they are valid at the trailing edge of each clock. One clock cycle is generated for each data bit. Only as many clock cycles are generated as there are data bits.

18.4.1.2 Clock Polarity

A clock polarity option is provided for Microwire compatibility. Clock polarity is selected with the CKTXP bit of the BAUDCON register. Setting the CKTXP bit sets the clock Idle state as high. When the CKTXP bit is set, the data changes on the falling edge of each clock and is sampled on the rising edge of each clock. Clearing the CKTXP bit sets the Idle state as low. When the CKTXP bit is cleared, the data changes on the rising edge of each clock and is sampled on the falling edge of each clock.

18.4.1.3 Synchronous Master Transmission

Data is transferred out of the device on the RX/DT pin. The RX/DT and TX/CK pin output drivers are automatically enabled when the EUSART is configured for synchronous master transmit operation.

A transmission is initiated by writing a character to the TXREG register. If the TSR still contains all or part of a previous character the new character data is held in the TXREG until the last bit of the previous character has been transmitted. If this is the first character, or the previous character has been completely flushed from the TSR, the data in the TXREG is immediately transferred to the TSR. The transmission of the character commences immediately following the transfer of the data to the TSR from the TXREG.

Each data bit changes on the leading edge of the master clock and remains valid until the subsequent leading clock edge.

Note:	The TSR register is not mapped in data memory, so it is not available to the user.

18.4.1.4 Data Polarity

The polarity of the transmit and receive data can be controlled with the DTRXP bit of the BAUDCON register. The default state of this bit is '0' which selects high true transmit and receive data. Setting the DTRXP bit to '1' will invert the data resulting in low true transmit and receive data.

18.4.1.5 Synchronous Master Transmission Set-up:

1. Initialize the SPBRGH, SPBRG register pair and the BRGH and BRG16 bits to achieve the desired baud rate (see **Section 18.3 "EUSART Baud Rate Generator (BRG)"**).
2. Set the RX/DT and TX/CK TRIS controls to '1'.
3. Enable the synchronous master serial port by setting bits SYNC, SPEN and CSRC. Set the TRIS bits corresponding to the RX/DT and TX/CK I/O pins.
4. Disable Receive mode by clearing bits SREN and CREN.
5. Enable Transmit mode by setting the TXEN bit.
6. If 9-bit transmission is desired, set the TX9 bit.
7. If interrupts are desired, set the TXIE, GIE and PEIE interrupt enable bits.
8. If 9-bit transmission is selected, the ninth bit should be loaded in the TX9D bit.
9. Start transmission by loading data to the TXREG register.

FIGURE 18-10: SYNCHRONOUS TRANSMISSION

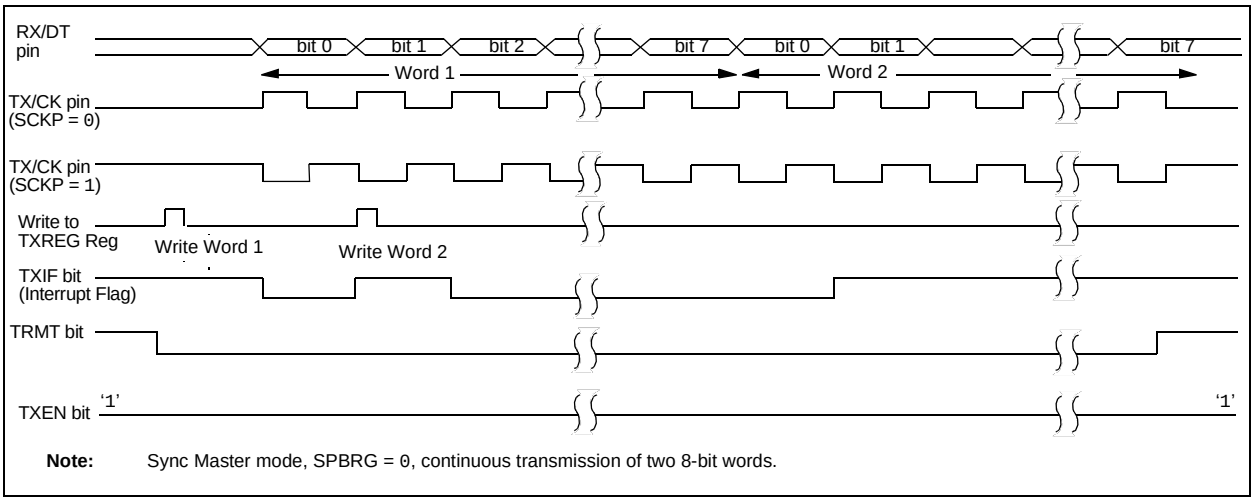

Note: Sync Master mode, SPBRG = 0, continuous transmission of two 8-bit words.

FIGURE 18-11: SYNCHRONOUS TRANSMISSION (THROUGH TXEN)

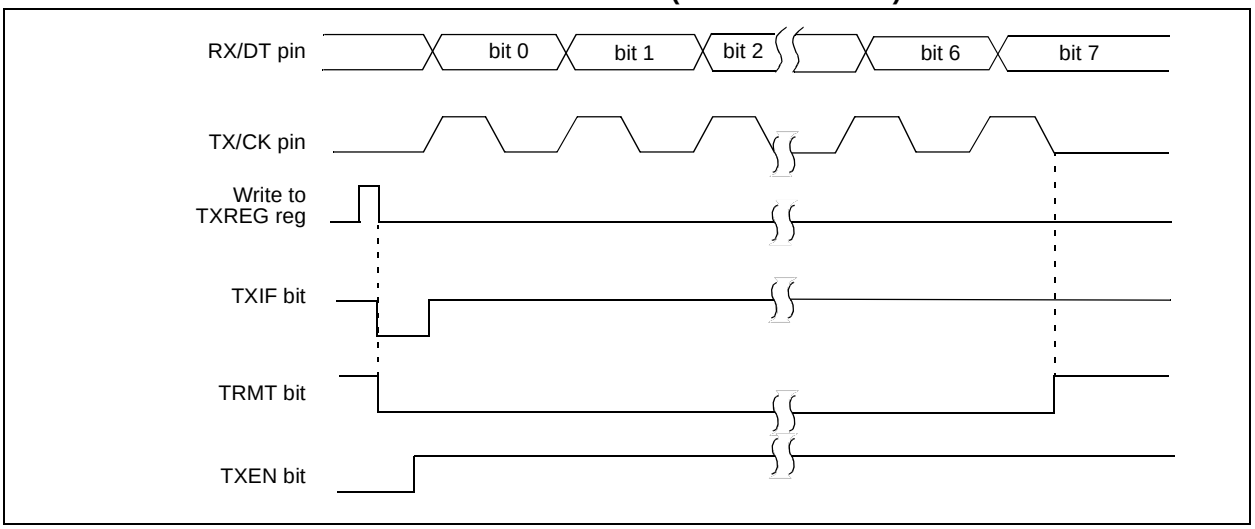

© 2010 Microchip Technology Inc.

TABLE 18-7: REGISTERS ASSOCIATED WITH SYNCHRONOUS MASTER TRANSMISSION

Name	Bit 7	Bit 6	Bit 5	Bit 4	Bit 3	Bit 2	Bit 1	Bit 0	Reset Values on page
INTCON	GIE/GIEH	PEIE/GIEL	TMR0IE	INT0IE	RBIE	TMR0IF	INT0IF	RBIF	59
PIR1	PSPIF(1)	ADIF	RCIF	TXIF	SSPIF	CCP1IF	TMR2IF	TMR1IF	62
PIE1	PSPIE(1)	ADIE	RCIE	TXIE	SSPIE	CCP1IE	TMR2IE	TMR1IE	62
IPR1	PSPIP(1)	ADIP	RCIP	TXIP	SSPIP	CCP1IP	TMR2IP	TMR1IP	62
RCSTA	SPEN	RX9	SREN	CREN	ADDEN	FERR	OERR	RX9D	61
TRISC	TRISC7	TRISC6	TRISC5	TRISC4	TRISC3	TRISC2	TRISC1	TRISC0	62
TXREG	EUSART Transmit Register								61
TXSTA	CSRC	TX9	TXEN	SYNC	SENDB	BRGH	TRMT	TX9D	61
BAUDCON	ABDOVF	RCIDL	DTRXP	CKTXP	BRG16	—	WUE	ABDEN	61
SPBRGH	EUSART Baud Rate Generator Register, High Byte								61
SPBRG	EUSART Baud Rate Generator Register, Low Byte								61

Legend: — = unimplemented, read as '0'. Shaded cells are not used for synchronous master transmission.

Note 1: Reserved in PIC18F2XK20 devices; always maintain these bits clear.

18.4.1.6 Synchronous Master Reception

Data is received at the RX/DT pin. The RX/DT pin output driver must be disabled by setting the corresponding TRIS bits when the EUSART is configured for synchronous master receive operation.

In Synchronous mode, reception is enabled by setting either the Single Receive Enable bit (SREN of the RCSTA register) or the Continuous Receive Enable bit (CREN of the RCSTA register).

When SREN is set and CREN is clear, only as many clock cycles are generated as there are data bits in a single character. The SREN bit is automatically cleared at the completion of one character. When CREN is set, clocks are continuously generated until CREN is cleared. If CREN is cleared in the middle of a character the CK clock stops immediately and the partial character is discarded. If SREN and CREN are both set, then SREN is cleared at the completion of the first character and CREN takes precedence.

To initiate reception, set either SREN or CREN. Data is sampled at the RX/DT pin on the trailing edge of the TX/CK clock pin and is shifted into the Receive Shift Register (RSR). When a complete character is received into the RSR, the RCIF bit is set and the character is automatically transferred to the two character receive FIFO. The Least Significant eight bits of the top character in the receive FIFO are available in RCREG. The RCIF bit remains set as long as there are un-read characters in the receive FIFO.

18.4.1.7 Slave Clock

Synchronous data transfers use a separate clock line, which is synchronous with the data. A device configured as a slave receives the clock on the TX/CK line. The TX/CK pin output driver must be disabled by setting the associated TRIS bit when the device is configured for synchronous slave transmit or receive operation. Serial data bits change on the leading edge to ensure they are valid at the trailing edge of each clock. One data bit is transferred for each clock cycle. Only as many clock cycles should be received as there are data bits.

18.4.1.8 Receive Overrun Error

The receive FIFO buffer can hold two characters. An overrun error will be generated if a third character, in its entirety, is received before RCREG is read to access the FIFO. When this happens the OERR bit of the RCSTA register is set. Previous data in the FIFO will not be overwritten. The two characters in the FIFO buffer can be read, however, no additional characters will be received until the error is cleared. The OERR bit can only be cleared by clearing the overrun condition. If the overrun error occurred when the SREN bit is set and CREN is clear then the error is cleared by reading RCREG. If the overrun occurred when the CREN bit is set then the error condition is cleared by either clearing the CREN bit of the RCSTA register or by clearing the SPEN bit which resets the EUSART.

18.4.1.9 Receiving 9-bit Characters

The EUSART supports 9-bit character reception. When the RX9 bit of the RCSTA register is set the EUSART will shift 9-bits into the RSR for each character received. The RX9D bit of the RCSTA register is the ninth, and Most Significant, data bit of the top unread character in the receive FIFO. When reading 9-bit data from the receive FIFO buffer, the RX9D data bit must be read before reading the 8 Least Significant bits from the RCREG.

18.4.1.10 Synchronous Master Reception Set-up:

1. Initialize the SPBRGH, SPBRG register pair for the appropriate baud rate. Set or clear the BRGH and BRG16 bits, as required, to achieve the desired baud rate.
2. Set the RX/DT and TX/CK TRIS controls to ‘1’.
3. Enable the synchronous master serial port by setting bits SYNC, SPEN and CSRC. Disable RX/DT and TX/CK output drivers by setting the corresponding TRIS bits.
4. Ensure bits CREN and SREN are clear.
5. If using interrupts, set the GIE and PEIE bits of the INTCON register and set RCIE.
6. If 9-bit reception is desired, set bit RX9.
7. Start reception by setting the SREN bit or for continuous reception, set the CREN bit.
8. Interrupt flag bit RCIF will be set when reception of a character is complete. An interrupt will be generated if the enable bit RCIE was set.
9. Read the RCSTA register to get the ninth bit (if enabled) and determine if any error occurred during reception.
10. Read the 8-bit received data by reading the RCREG register.
11. If an overrun error occurs, clear the error by either clearing the CREN bit of the RCSTA register or by clearing the SPEN bit which resets the EUSART.

© 2010 Microchip Technology Inc.

FIGURE 18-12: SYNCHRONOUS RECEPTION (MASTER MODE, SREN)

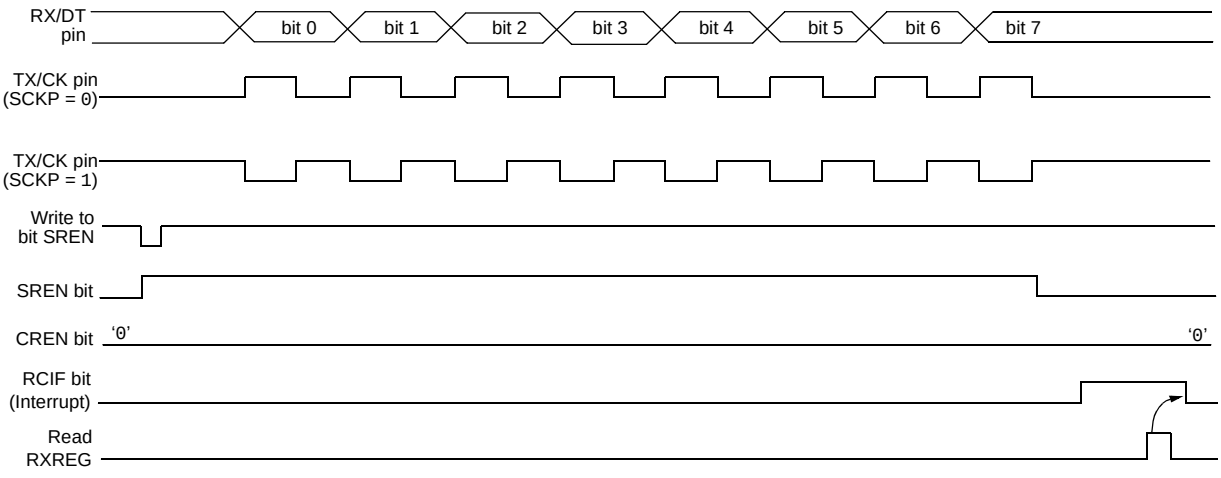

Note: Timing diagram demonstrates Sync Master mode with bit SREN = 1 and bit BRGH = 0.

TABLE 18-8: REGISTERS ASSOCIATED WITH SYNCHRONOUS MASTER RECEPTION

Name	Bit 7	Bit 6	Bit 5	Bit 4	Bit 3	Bit 2	Bit 1	Bit 0	Reset Values on page
INTCON	GIE/GIEH	PEIE/GIEL	TMR0IE	INT0IE	RBIE	TMR0IF	INT0IF	RBIF	59
PIR1	PSPIF(1)	ADIF	RCIF	TXIF	SSPIF	CCP1IF	TMR2IF	TMR1IF	62
PIE1	PSPIE(1)	ADIE	RCIE	TXIE	SSPIE	CCP1IE	TMR2IE	TMR1IE	62
IPR1	PSPIP(1)	ADIP	RCIP	TXIP	SSPIP	CCP1IP	TMR2IP	TMR1IP	62
RCSTA	SPEN	RX9	SREN	CREN	ADDEN	FERR	OERR	RX9D	61
RCREG	EUSART Receive Register								61
TXSTA	CSRC	TX9	TXEN	SYNC	SENDB	BRGH	TRMT	TX9D	61
BAUDCON	ABDOVF	RCIDL	DTRXP	CKTXP	BRG16	—	WUE	ABDEN	61
SPBRGH	EUSART Baud Rate Generator Register, High Byte								61
SPBRG	EUSART Baud Rate Generator Register, Low Byte								61

Legend: — = unimplemented, read as '0'. Shaded cells are not used for synchronous master reception.

Note 1: Reserved in 28-pin devices; always maintain these bits clear.

18.4.2 SYNCHRONOUS SLAVE MODE

The following bits are used to configure the EUSART for Synchronous slave operation:

- SYNC = 1
- CSRC = 0
- SREN = 0 (for transmit); SREN = 1 (for receive)
- CREN = 0 (for transmit); CREN = 1 (for receive)
- SPEN = 1

Setting the SYNC bit of the TXSTA register configures the device for synchronous operation. Clearing the CSRC bit of the TXSTA register configures the device as a slave. Clearing the SREN and CREN bits of the RCSTA register ensures that the device is in the Transmit mode, otherwise the device will be configured to receive. Setting the SPEN bit of the RCSTA register enables the EUSART. If the RX/DT or TX/CK pins are shared with an analog peripheral the analog I/O functions must be disabled by clearing the corresponding ANSEL bits.

RX/DT and TX/CK pin output drivers must be disabled by setting the corresponding TRIS bits.

18.4.2.1 EUSART Synchronous Slave Transmit

The operation of the Synchronous Master and Slave modes are identical (see **Section 18.4.1.3 "Synchronous Master Transmission")**, except in the case of the Sleep mode.

If two words are written to the TXREG and then the SLEEP instruction is executed, the following will occur:

1. The first character will immediately transfer to the TSR register and transmit.
2. The second word will remain in TXREG register.
3. The TXIF bit will not be set.
4. After the first character has been shifted out of TSR, the TXREG register will transfer the second character to the TSR and the TXIF bit will now be set.
5. If the PEIE and TXIE bits are set, the interrupt will wake the device from Sleep and execute the next instruction. If the GIE bit is also set, the program will call the Interrupt Service Routine.

18.4.2.2 Synchronous Slave Transmission Set-up:

1. Set the SYNC and SPEN bits and clear the CSRC bit.
2. Set the RX/DT and TX/CK TRIS controls to '1'.
3. Clear the CREN and SREN bits.
4. If using interrupts, ensure that the GIE and PEIE bits of the INTCON register are set and set the TXIE bit.
5. If 9-bit transmission is desired, set the TX9 bit.
6. Enable transmission by setting the TXEN bit.
7. If 9-bit transmission is selected, insert the Most Significant bit into the TX9D bit.
8. Start transmission by writing the Least Significant 8 bits to the TXREG register.

TABLE 18-9: REGISTERS ASSOCIATED WITH SYNCHRONOUS SLAVE TRANSMISSION

Name	Bit 7	Bit 6	Bit 5	Bit 4	Bit 3	Bit 2	Bit 1	Bit 0	Reset Values on page
INTCON	GIE/GIEH	PEIE/GIEL	TMR0IE	INT0IE	RBIE	TMR0IF	INT0IF	RBIF	59
PIR1	PSPIF(1)	ADIF	RCIF	TXIF	SSPIF	CCP1IF	TMR2IF	TMR1IF	62
PIE1	PSPIE(1)	ADIE	RCIE	TXIE	SSPIE	CCP1IE	TMR2IE	TMR1IE	62
IPR1	PSPIP(1)	ADIP	RCIP	TXIP	SSPIP	CCP1IP	TMR2IP	TMR1IP	62
RCSTA	SPEN	RX9	SREN	CREN	ADDEN	FERR	OERR	RX9D	61
TRISC	TRISC7	TRISC6	TRISC5	TRISC4	TRISC3	TRISC2	TRISC1	TRISC0	62
TXREG	EUSART Transmit Register								61
TXSTA	CSRC	TX9	TXEN	SYNC	SENDB	BRGH	TRMT	TX9D	61
BAUDCON	ABDOVF	RCIDL	DTRXP	CKTXP	BRG16	—	WUE	ABDEN	61
SPBRGH	EUSART Baud Rate Generator Register, High Byte								61
SPBRG	EUSART Baud Rate Generator Register, Low Byte								61

Legend: — = unimplemented, read as '0'. Shaded cells are not used for synchronous master transmission.

Note 1: Reserved in PIC18F2XK20 devices; always maintain these bits clear.

© 2010 Microchip Technology Inc.

18.4.2.3 EUSART Synchronous Slave Reception

The operation of the Synchronous Master and Slave modes is identical (**Section 18.4.1.6 "Synchronous Master Reception"**), with the following exceptions:

- Sleep
- CREN bit is always set, therefore the receiver is never Idle
- SREN bit, which is a "don't care" in Slave mode

A character may be received while in Sleep mode by setting the CREN bit prior to entering Sleep. Once the word is received, the RSR register will transfer the data to the RCREG register. If the RCIE enable bit is set, the interrupt generated will wake the device from Sleep and execute the next instruction. If the GIE bit is also set, the program will branch to the interrupt vector.

18.4.2.4 Synchronous Slave Reception Set-up:

1. Set the SYNC and SPEN bits and clear the CSRC bit.
2. Set the RX/DT and TX/CK TRIS controls to '1'.
3. If using interrupts, ensure that the GIE and PEIE bits of the INTCON register are set and set the RCIE bit.
4. If 9-bit reception is desired, set the RX9 bit.
5. Set the CREN bit to enable reception.
6. The RCIF bit will be set when reception is complete. An interrupt will be generated if the RCIE bit was set.
7. If 9-bit mode is enabled, retrieve the Most Significant bit from the RX9D bit of the RCSTA register.
8. Retrieve the 8 Least Significant bits from the receive FIFO by reading the RCREG register.
9. If an overrun error occurs, clear the error by either clearing the CREN bit of the RCSTA register or by clearing the SPEN bit which resets the EUSART.

TABLE 18-10: REGISTERS ASSOCIATED WITH SYNCHRONOUS SLAVE RECEPTION

Name	Bit 7	Bit 6	Bit 5	Bit 4	Bit 3	Bit 2	Bit 1	Bit 0	Reset Values on page
INTCON	GIE/GIEH	PEIE/GIEL	TMR0IE	INT0IE	RBIE	TMR0IF	INT0IF	RBIF	59
PIR1	PSPIF(1)	ADIF	RCIF	TXIF	SSPIF	CCP1IF	TMR2IF	TMR1IF	62
PIE1	PSPIE(1)	ADIE	RCIE	TXIE	SSPIE	CCP1IE	TMR2IE	TMR1IE	62
IPR1	PSPIP(1)	ADIP	RCIP	TXIP	SSPIP	CCP1IP	TMR2IP	TMR1IP	62
RCSTA	SPEN	RX9	SREN	CREN	ADDEN	FERR	OERR	RX9D	61
RCREG	EUSART Receive Register								61
TXSTA	CSRC	TX9	TXEN	SYNC	SENDB	BRGH	TRMT	TX9D	61
BAUDCON	ABDOVF	RCIDL	DTRXP	CKTXP	BRG16	—	WUE	ABDEN	61
SPBRGH	EUSART Baud Rate Generator Register, High Byte								61
SPBRG	EUSART Baud Rate Generator Register, Low Byte								61

Legend: — = unimplemented, read as '0'. Shaded cells are not used for synchronous slave reception.

Note 1: Reserved in 28-pin devices; always maintain these bits clear.

NOTES:

© 2010 Microchip Technology Inc.

19.0 ANALOG-TO-DIGITAL CONVERTER (ADC) MODULE

The Analog-to-Digital Converter (ADC) allows conversion of an analog input signal to a 10-bit binary representation of that signal. This device uses analog inputs, which are multiplexed into a single sample and hold circuit. The output of the sample and hold is connected to the input of the converter. The converter generates a 10-bit binary result via successive approximation and stores the conversion result into the ADC result registers (ADRESL and ADRESH).

The ADC voltage reference is software selectable to either VDD or a voltage applied to the external reference pins.

The ADC can generate an interrupt upon completion of a conversion. This interrupt can be used to wake-up the device from Sleep.

Figure 19-1 shows the block diagram of the ADC.

FIGURE 19-1: ADC BLOCK DIAGRAM

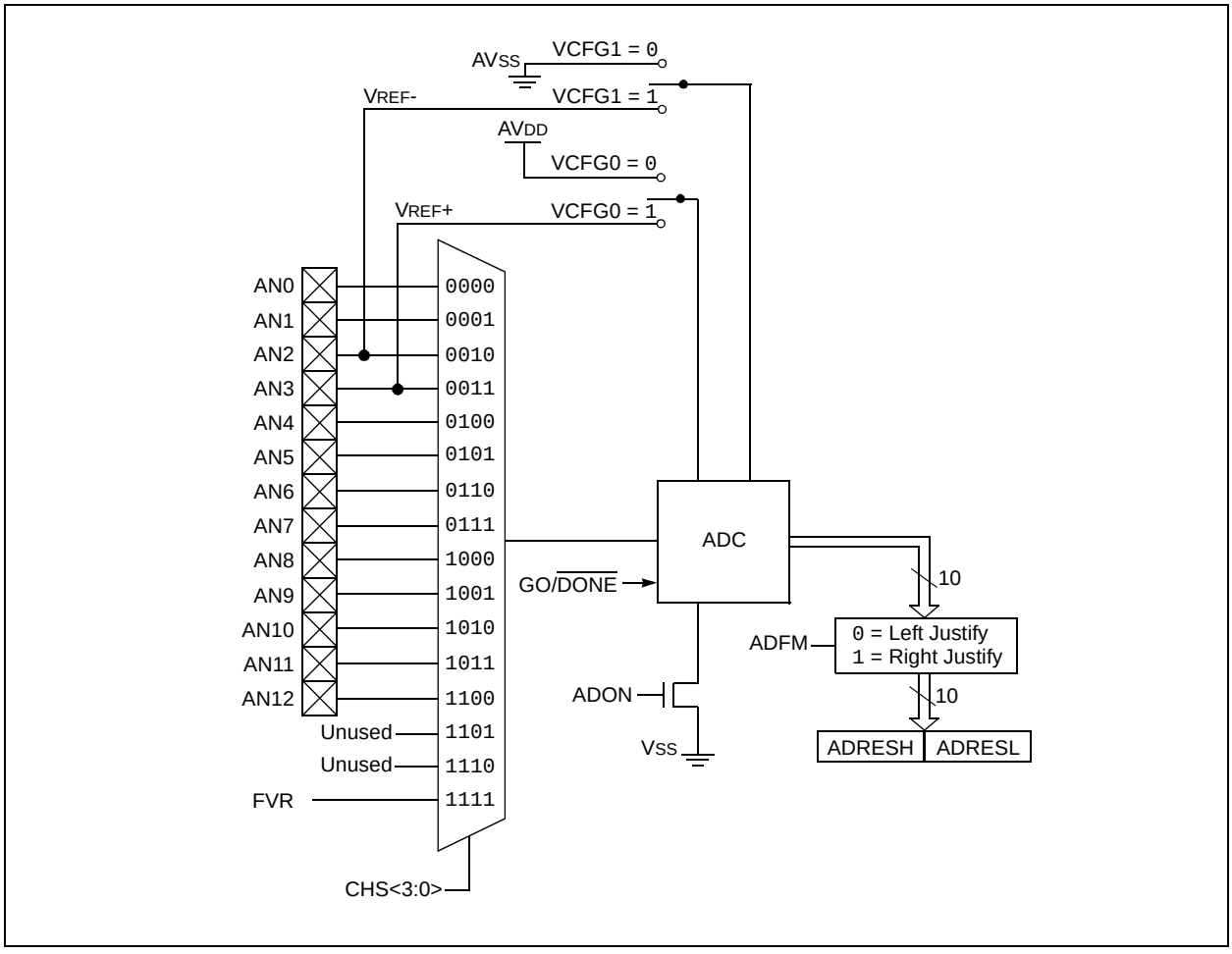

19.1 ADC Configuration

When configuring and using the ADC the following functions must be considered:

- Port configuration
- Channel selection
- ADC voltage reference selection
- ADC conversion clock source
- Interrupt control
- Results formatting

19.1.1 PORT CONFIGURATION

The ANSEL, ANSELH, TRISA, TRISB and TRISE registers all configure the A/D port pins. Any port pin needed as an analog input should have its corresponding ANSx bit set to disable the digital input buffer and TRISx bit set to disable the digital output driver. If the TRISx bit is cleared, the digital output level (V_{OH} or V_{OL}) will be converted.

The A/D operation is independent of the state of the ANSx bits and the TRIS bits.

Note 1:	When reading the PORT register, all pins with their corresponding ANSx bit set read as cleared (a low level). However, analog conversion of pins configured as digital inputs (ANSx bit cleared and TRISx bit set) will be accurately converted.
2:	Analog levels on any pin with the corresponding ANSx bit cleared may cause the digital input buffer to consume current out of the device's specification limits.
3:	The PBADEN bit in Configuration Register 3H configures PORTB pins to reset as analog or digital pins by controlling how the bits in ANSELH are reset.

19.1.2 CHANNEL SELECTION

The CHS bits of the ADCON0 register determine which channel is connected to the sample and hold circuit.

When changing channels, a delay is required before starting the next conversion. Refer to **Section 19.2 "ADC Operation"** for more information.

19.1.3 ADC VOLTAGE REFERENCE

The VCFG bits of the ADCON1 register provide independent control of the positive and negative voltage references. The positive voltage reference can be either V_{DD} or an external voltage source. Likewise, the negative voltage reference can be either V_{SS} or an external voltage source.

19.1.4 SELECTING AND CONFIGURING ACQUISITION TIME

The ADCON2 register allows the user to select an acquisition time that occurs each time the GO/DONE bit is set.

Acquisition time is set with the ACQT<2:0> bits of the ADCON2 register. Acquisition delays cover a range of 2 to 20 T_{AD}. When the GO/DONE bit is set, the A/D module continues to sample the input for the selected acquisition time, then automatically begins a conversion. Since the acquisition time is programmed, there is no need to wait for an acquisition time between selecting a channel and setting the GO/DONE bit.

Manual acquisition is selected when ACQT<2:0> = 000. When the GO/DONE bit is set, sampling is stopped and a conversion begins. The user is responsible for ensuring the required acquisition time has passed between selecting the desired input channel and setting the GO/DONE bit. This option is also the default Reset state of the ACQT<2:0> bits and is compatible with devices that do not offer programmable acquisition times.

In either case, when the conversion is completed, the GO/DONE bit is cleared, the ADIF flag is set and the A/D begins sampling the currently selected channel again. When an acquisition time is programmed, there is no indication of when the acquisition time ends and the conversion begins.

19.1.5 CONVERSION CLOCK

The source of the conversion clock is software selectable via the ADCS bits of the ADCON2 register. There are seven possible clock options:

- $F_{OSC}/2$
- $F_{OSC}/4$
- $F_{OSC}/8$
- $F_{OSC}/16$
- $F_{OSC}/32$
- $F_{OSC}/64$
- F_{RC} (dedicated internal oscillator)

The time to complete one bit conversion is defined as T_{AD}. One full 10-bit conversion requires 11 T_{AD} periods as shown in Figure 19-3.

For correct conversion, the appropriate T_{AD} specification must be met. See A/D conversion requirements in Table 26-25 for more information. Table 19-1 gives examples of appropriate ADC clock selections.

Note:	Unless using the F_{RC}, any changes in the system clock frequency will change the ADC clock frequency, which may adversely affect the ADC result.

© 2010 Microchip Technology Inc.

19.1.6 INTERRUPTS

The ADC module allows for the ability to generate an interrupt upon completion of an Analog-to-Digital Conversion. The ADC interrupt flag is the ADIF bit in the PIR1 register. The ADC interrupt enable is the ADIE bit in the PIE1 register. The ADIF bit must be cleared by software.

Note:	The ADIF bit is set at the completion of every conversion, regardless of whether or not the ADC interrupt is enabled.

This interrupt can be generated while the device is operating or while in Sleep. If the device is in Sleep, the interrupt will wake-up the device. Upon waking from Sleep, the next instruction following the SLEEP instruction is always executed. If the user is attempting to wake-up from Sleep and resume in-line code execution, the global interrupt must be disabled. If the global interrupt is enabled, execution will switch to the Interrupt Service Routine. Please see **Section 19.1.6 "Interrupts"** for more information.

TABLE 19-1: ADC CLOCK PERIOD (TAD) VS. DEVICE OPERATING FREQUENCIES

ADC Clock Period (TAD)		Device Frequency (FOSC)			
ADC Clock Source	**ADCS<2:0>**	**64 MHz**	**16 MHz**	**4 MHz**	**1 MHz**
FOSC/2	000	31.25 ns(2)	125 ns(2)	500 ns(2)	2.0 μs
FOSC/4	100	62.5 ns(2)	250 ns(2)	1.0 μs	4.0 μs(3)
FOSC/8	001	400 ns(2)	500 ns(2)	2.0 μs	8.0 μs(3)
FOSC/16	101	250 ns(2)	1.0 μs	4.0 μs(3)	16.0 μs(3)
FOSC/32	010	500 ns(2)	2.0 μs	8.0 μs(3)	32.0 μs(3)
FOSC/64	110	1.0 μs	4.0 μs(3)	16.0 μs(3)	64.0 μs(3)
FRC	x11	1-4 μs(1,4)	1-4 μs(1,4)	1-4 μs(1,4)	1-4 μs(1,4)

Legend: Shaded cells are outside of recommended range.

Note 1: The FRC source has a typical TAD time of 1.7 μs.

2: These values violate the minimum required TAD time.

3: For faster conversion times, the selection of another clock source is recommended.

4: When the device frequency is greater than 1 MHz, the FRC clock source is only recommended if the conversion will be performed during Sleep.

19.1.7 RESULT FORMATTING

The 10-bit A/D conversion result can be supplied in two formats, left justified or right justified. The ADFM bit of the ADCON2 register controls the output format.

Figure 19-2 shows the two output formats.

FIGURE 19-2: 10-BIT A/D CONVERSION RESULT FORMAT

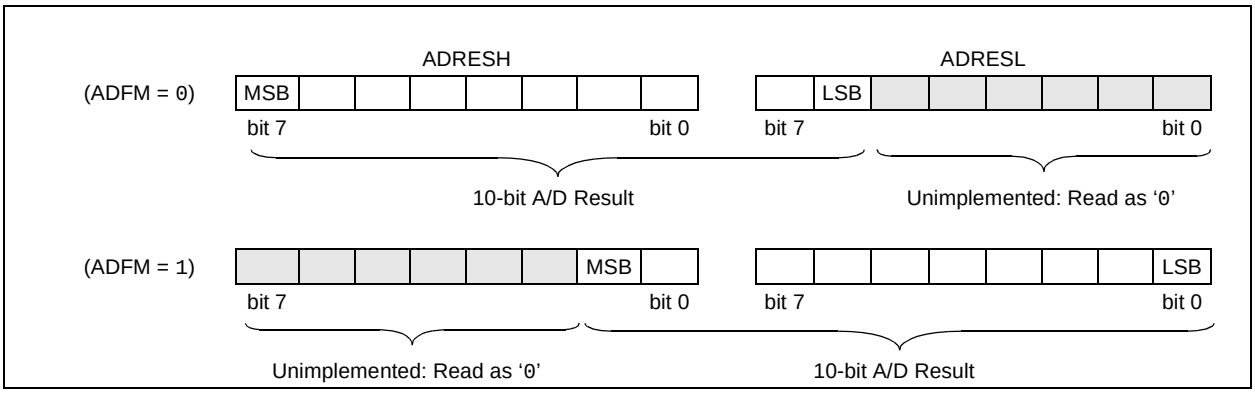

19.2 ADC Operation

19.2.1 STARTING A CONVERSION

To enable the ADC module, the ADON bit of the ADCON0 register must be set to a '1'. Setting the GO/DONE bit of the ADCON0 register to a '1' will, depending on the ACQT bits of the ADCON2 register, either immediately start the Analog-to-Digital conversion or start an acquisition delay followed by the Analog-to-Digital conversion.

Figure 19-3 shows the operation of the A/D converter after the GO bit has been set and the ACQT<2:0> bits are cleared. A conversion is started after the following instruction to allow entry into SLEEP mode before the conversion begins.

Figure 19-4 shows the operation of the A/D converter after the GO bit has been set and the ACQT<2:0> bits are set to '010' which selects a 4 TAD acquisition time before the conversion starts.

Note:	The GO/DONE bit should not be set in the same instruction that turns on the ADC. Refer to **Section 19.2.9 "A/D Conversion Procedure"**.

FIGURE 19-3: A/D CONVERSION TAD CYCLES (ACQT<2:0> = 000, TACQ = 0)

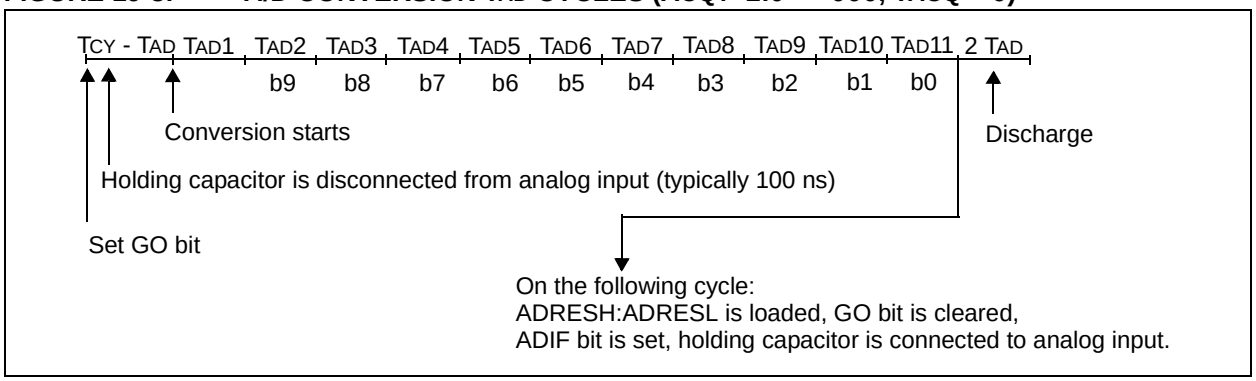

FIGURE 19-4: A/D CONVERSION TAD CYCLES (ACQT<2:0> = 010, TACQ = 4 TAD)

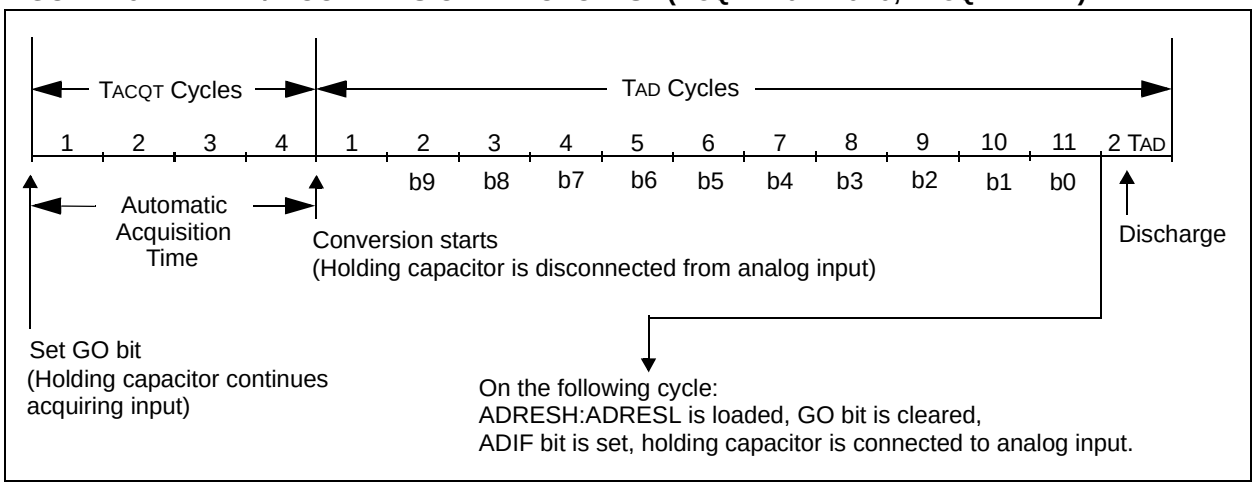

© 2010 Microchip Technology Inc.

19.2.2 COMPLETION OF A CONVERSION

When the conversion is complete, the ADC module will:

- Clear the GO/DONE bit
- Set the ADIF flag bit
- Update the ADRESH:ADRESL registers with new conversion result

19.2.3 DISCHARGE

The discharge phase is used to initialize the value of the capacitor array. The array is discharged after every sample. This feature helps to optimize the unity-gain amplifier, as the circuit always needs to charge the capacitor array, rather than charge/discharge based on previous measure values.

19.2.4 TERMINATING A CONVERSION

If a conversion must be terminated before completion, the GO/DONE bit can be cleared by software. The ADRESH:ADRESL registers will not be updated with the partially complete Analog-to-Digital conversion sample. Instead, the ADRESH:ADRESL register pair will retain the value of the previous conversion.

Note:	A device Reset forces all registers to their Reset state. Thus, the ADC module is turned off and any pending conversion is terminated.

19.2.5 DELAY BETWEEN CONVERSIONS

After the A/D conversion is completed or aborted, a 2 TAD wait is required before the next acquisition can be started. After this wait, the currently selected channel is reconnected to the charge holding capacitor commencing the next acquisition.

19.2.6 ADC OPERATION IN POWER-MANAGED MODES

The selection of the automatic acquisition time and A/D conversion clock is determined in part by the clock source and frequency while in a power-managed mode.

If the A/D is expected to operate while the device is in a power-managed mode, the ACQT<2:0> and ADCS<2:0> bits in ADCON2 should be updated in accordance with the clock source to be used in that mode. After entering the mode, an A/D acquisition or conversion may be started. Once started, the device should continue to be clocked by the same clock source until the conversion has been completed.

If desired, the device may be placed into the corresponding Idle mode during the conversion. If the device clock frequency is less than 1 MHz, the A/D FRC clock source should be selected.

19.2.7 ADC OPERATION DURING SLEEP

The ADC module can operate during Sleep. This requires the ADC clock source to be set to the FRC option. When the FRC clock source is selected, the ADC waits one additional instruction before starting the conversion. This allows the SLEEP instruction to be executed, which can reduce system noise during the conversion. If the ADC interrupt is enabled, the device will wake-up from Sleep when the conversion completes. If the ADC interrupt is disabled, the ADC module is turned off after the conversion completes, although the ADON bit remains set.

When the ADC clock source is something other than FRC, a SLEEP instruction causes the present conversion to be aborted and the ADC module is turned off, although the ADON bit remains set.

19.2.8 SPECIAL EVENT TRIGGER

The CCP2 Special Event Trigger allows periodic ADC measurements without software intervention. When this trigger occurs, the GO/DONE bit is set by hardware and the Timer1 or Timer3 counter resets to zero.

Using the Special Event Trigger does not assure proper ADC timing. It is the user's responsibility to ensure that the ADC timing requirements are met.

See **Section 11.3.4 "Special Event Trigger"** for more information.

19.2.9 A/D CONVERSION PROCEDURE

This is an example procedure for using the ADC to perform an Analog-to-Digital conversion:

1. Configure Port:
   - Disable pin output driver (See TRIS register)
   - Configure pin as analog
2. Configure the ADC module:
   - Select ADC conversion clock
   - Configure voltage reference
   - Select ADC input channel
   - Select result format
   - Select acquisition delay
   - Turn on ADC module
3. Configure ADC interrupt (optional):
   - Clear ADC interrupt flag
   - Enable ADC interrupt
   - Enable peripheral interrupt
   - Enable global interrupt(1)
4. Wait the required acquisition time(2).
5. Start conversion by setting the GO/$\overline{\text{DONE}}$ bit.
6. Wait for ADC conversion to complete by one of the following:
   - Polling the GO/$\overline{\text{DONE}}$ bit
   - Waiting for the ADC interrupt (interrupts enabled)
7. Read ADC Result
8. Clear the ADC interrupt flag (required if interrupt is enabled).

Note 1: The global interrupt can be disabled if the user is attempting to wake-up from Sleep and resume in-line code execution.

2: Software delay required if ACQT bits are set to zero delay. See **Section 19.3 "A/D Acquisition Requirements"**.

EXAMPLE 19-1: A/D CONVERSION

```
;This code block configures the ADC
;for polling, Vdd and Vss as reference, Frc
clock and AN0 input.
;
;Conversion start & polling for completion
; are included.
;
MOVLW     B'10101111'  ;right justify, Frc,
MOVWF     ADCON2       ; & 12 TAD ACQ time
MOVLW     B'00000000'  ;ADC ref = Vdd,Vss
MOVWF     ADCON1       ;
BSF       TRISA,0      ;Set RA0 to input
BSF       ANSEL,0      ;Set RA0 to analog
MOVLW     B'00000001'  ;AN0, ADC on
MOVWF     ADCON0       ;
BSF       ADCON0,GO    ;Start conversion
ADCPoll:
BTFSC     ADCON0,GO    ;Is conversion done?
BRA       ADCPoll      ;No, test again
; Result is complete - store 2 MSbits in
; RESULTHI and 8 LSbits in RESULTLO
MOVFF     ADRESH,RESULTHI
MOVFF     ADRESL,RESULTLO
```


© 2010 Microchip Technology Inc.

19.2.10 ADC REGISTER DEFINITIONS

The following registers are used to control the operation of the ADC.

Note:	Analog pin control is performed by the ANSEL and ANSELH registers. For ANSEL and ANSELH registers, see Register 10-2 and Register 10-3, respectively.

REGISTER 19-1: ADCON0: A/D CONTROL REGISTER 0

U-0	U-0	R/W-0	R/W-0	R/W-0	R/W-0	R/W-0	R/W-0
—	—	CHS3	CHS2	CHS1	CHS0	GO/$\overline{\text{DONE}}$	ADON
bit 7							bit 0

Legend:			
R = Readable bit	W = Writable bit	U = Unimplemented bit, read as ‘0’	
-n = Value at POR	‘1’ = Bit is set	‘0’ = Bit is cleared	x = Bit is unknown

bit 7-6 **Unimplemented:** Read as ‘0’

bit 5-2 **CHS<3:0>: Analog Channel Select bits**

0000 = AN0
0001 = AN1
0010 = AN2
0011 = AN3
0100 = AN4
0101 = AN5**(1)**
0110 = AN6**(1)**
0111 = AN7**(1)**
1000 = AN8
1001 = AN9
1010 = AN10
1011 = AN11
1100 = AN12
1101 = Reserved
1110 = Reserved
1111 = FVR (1.2 Volt Fixed Voltage Reference)**(2)**

bit 1 **GO/$\overline{\text{DONE}}$:** A/D Conversion Status bit

1 = A/D conversion cycle in progress. Setting this bit starts an A/D conversion cycle.
This bit is automatically cleared by hardware when the A/D conversion has completed.
0 = A/D conversion completed/not in progress

bit 0 **ADON:** ADC Enable bit

1 = ADC is enabled
0 = ADC is disabled and consumes no operating current

Note 1: These channels are not implemented on PIC18F2XK20 devices.
2: Allow greater than 15 μs acquisition time when measuring the Fixed Voltage Reference.

REGISTER 19-2: ADCON1: A/D CONTROL REGISTER 1

U-0	U-0	R/W-0	R/W-0	U-0	U-0	U-0	U-0
—	—	VCFG1	VCFG0	—	—	—	—
bit 7							bit 0

Legend:			
R = Readable bit	W = Writable bit	U = Unimplemented bit, read as ‘0’	
-n = Value at POR	‘1’ = Bit is set	‘0’ = Bit is cleared	x = Bit is unknown

bit 7-6 **Unimplemented:** Read as ‘0’

bit 5 **VCFG1:** Negative Voltage Reference select bit
1 = Negative voltage reference supplied externally through V_{REF-} pin.
0 = Negative voltage reference supplied internally by V_{SS}.

bit 4 **VCFG0:** Positive Voltage Reference select bit
1 = Positive voltage reference supplied externally through V_{REF+} pin.
0 = Positive voltage reference supplied internally by V_{DD}.

bit 3-0 **Unimplemented:** Read as ‘0’

© 2010 Microchip Technology Inc.

REGISTER 19-3: ADCON2: A/D CONTROL REGISTER 2

R/W-0	U-0	R/W-0	R/W-0	R/W-0	R/W-0	R/W-0	R/W-0
ADFM	—	ACQT2	ACQT1	ACQT0	ADCS2	ADCS1	ADCS0
bit 7							bit 0

Legend:			
R = Readable bit	W = Writable bit	U = Unimplemented bit, read as '0'	
-n = Value at POR	'1' = Bit is set	'0' = Bit is cleared	x = Bit is unknown

bit 7 **ADFM:** A/D Conversion Result Format Select bit
1 = Right justified
0 = Left justified

bit 6 **Unimplemented:** Read as '0'

bit 5-3 **ACQT<2:0>:** A/D Acquisition time select bits. Acquisition time is the duration that the A/D charge holding capacitor remains connected to A/D channel from the instant the GO/$\overline{\text{DONE}}$ bit is set until conversions begins.
000 = 0**(1)**
001 = 2 TAD
010 = 4 TAD
011 = 6 TAD
100 = 8 TAD
101 = 12 TAD
110 = 16 TAD
111 = 20 TAD

bit 2-0 **ADCS<2:0>:** A/D Conversion Clock Select bits
000 = FOSC/2
001 = FOSC/8
010 = FOSC/32
011 = FRC**(1)** (clock derived from a dedicated internal oscillator = 600 kHz nominal)
100 = FOSC/4
101 = FOSC/16
110 = FOSC/64
111 = FRC**(1)** (clock derived from a dedicated internal oscillator = 600 kHz nominal)

Note 1: When the A/D clock source is selected as FRC then the start of conversion is delayed by one instruction cycle after the GO/DONE bit is set to allow the SLEEP instruction to be executed.

REGISTER 19-4: ADRESH: ADC RESULT REGISTER HIGH (ADRESH) ADFM = 0

R/W-x	R/W-x	R/W-x	R/W-x	R/W-x	R/W-x	R/W-x	R/W-x
ADRES9	ADRES8	ADRES7	ADRES6	ADRES5	ADRES4	ADRES3	ADRES2
bit 7							bit 0

Legend:			
R = Readable bit	W = Writable bit	U = Unimplemented bit, read as ‘0’	
-n = Value at POR	‘1’ = Bit is set	‘0’ = Bit is cleared	x = Bit is unknown

bit 7-0 **ADRES<9:2>**: ADC Result Register bits
Upper 8 bits of 10-bit conversion result

REGISTER 19-5: ADRESL: ADC RESULT REGISTER LOW (ADRESL) ADFM = 0

R/W-x	R/W-x	R/W-x	R/W-x	R/W-x	R/W-x	R/W-x	R/W-x
ADRES1	ADRES0	—	—	—	—	—	—
bit 7							bit 0

Legend:			
R = Readable bit	W = Writable bit	U = Unimplemented bit, read as ‘0’	
-n = Value at POR	‘1’ = Bit is set	‘0’ = Bit is cleared	x = Bit is unknown

bit 7-6 **ADRES<1:0>**: ADC Result Register bits
Lower 2 bits of 10-bit conversion result

bit 5-0 **Reserved**: Do not use.

REGISTER 19-6: ADRESH: ADC RESULT REGISTER HIGH (ADRESH) ADFM = 1

R/W-x	R/W-x	R/W-x	R/W-x	R/W-x	R/W-x	R/W-x	R/W-x
—	—	—	—	—	—	ADRES9	ADRES8
bit 7							bit 0

Legend:			
R = Readable bit	W = Writable bit	U = Unimplemented bit, read as ‘0’	
-n = Value at POR	‘1’ = Bit is set	‘0’ = Bit is cleared	x = Bit is unknown

bit 7-2 **Reserved**: Do not use.

bit 1-0 **ADRES<9:8>**: ADC Result Register bits
Upper 2 bits of 10-bit conversion result

REGISTER 19-7: ADRESL: ADC RESULT REGISTER LOW (ADRESL) ADFM = 1

R/W-x	R/W-x	R/W-x	R/W-x	R/W-x	R/W-x	R/W-x	R/W-x
ADRES7	ADRES6	ADRES5	ADRES4	ADRES3	ADRES2	ADRES1	ADRES0
bit 7							bit 0

Legend:			
R = Readable bit	W = Writable bit	U = Unimplemented bit, read as ‘0’	
-n = Value at POR	‘1’ = Bit is set	‘0’ = Bit is cleared	x = Bit is unknown

bit 7-0 **ADRES<7:0>**: ADC Result Register bits
Lower 8 bits of 10-bit conversion result

© 2010 Microchip Technology Inc.

19.3 A/D Acquisition Requirements

For the ADC to meet its specified accuracy, the charge holding capacitor (CHOLD) must be allowed to fully charge to the input channel voltage level. The Analog Input model is shown in Figure 19-5. The source impedance (RS) and the internal sampling switch (RSS) impedance directly affect the time required to charge the capacitor CHOLD. The sampling switch (RSS) impedance varies over the device voltage (VDD), see Figure 19-5. **The maximum recommended impedance for analog sources is 10 kΩ.** As the source impedance is decreased, the acquisition time may be decreased. After the analog input channel is selected (or changed), an A/D acquisition must be done before the conversion can be started. To calculate the minimum acquisition time, Equation 19-1 may be used. This equation assumes that 1/2 LSb error is used (1024 steps for the ADC). The 1/2 LSb error is the maximum error allowed for the ADC to meet its specified resolution.

EQUATION 19-1: ACQUISITION TIME EXAMPLE

Assumptions: Temperature = *50°C and external impedance of 10kΩ* 3.0*V VDD*

$$\begin{aligned} T_{ACQ} &= \text{Amplifier Settling Time} + \text{Hold Capacitor Charging Time} + \text{Temperature Coefficient} \\ &= T_{AMP} + T_C + T_{COFF} \\ &= 5\mu s + T_C + [(\text{Temperature} - 25°C)(0.05\mu s/°C)] \end{aligned}$$

The value for TC can be approximated with the following equations:

$$V_{APPLIED}\left(1 - \frac{1}{2047}\right) = V_{CHOLD} \quad ;[1]\ V_{CHOLD}\ \text{charged to within 1/2 lsb}$$

$$V_{APPLIED}\left(1 - e^{\frac{-T_C}{RC}}\right) = V_{CHOLD} \quad ;[2]\ V_{CHOLD}\ \text{charge response to}\ V_{APPLIED}$$

$$V_{APPLIED}\left(1 - e^{\frac{-T_C}{RC}}\right) = V_{APPLIED}\left(1 - \frac{1}{2047}\right) \quad ;\text{combining [1] and [2]}$$

Solving for TC:

$$\begin{aligned} T_C &= -C_{HOLD}(R_{IC} + R_{SS} + R_S)\ ln(1/2047) \\ &= -13.5pF(1k\Omega + 700\Omega + 10k\Omega)\ ln(0.0004885) \\ &= 1.20\mu s \end{aligned}$$

Therefore:

$$\begin{aligned} T_{ACQ} &= 5\mu s + 1.20\mu s + [(50°C - 25°C)(0.05\mu s/°C)] \\ &= 7.45\mu s \end{aligned}$$

Note 1: The reference voltage (VREF) has no effect on the equation, since it cancels itself out.

2: The charge holding capacitor (CHOLD) is discharged after each conversion.

3: The maximum recommended impedance for analog sources is 10 kΩ. This is required to meet the pin leakage specification.

FIGURE 19-5: ANALOG INPUT MODEL

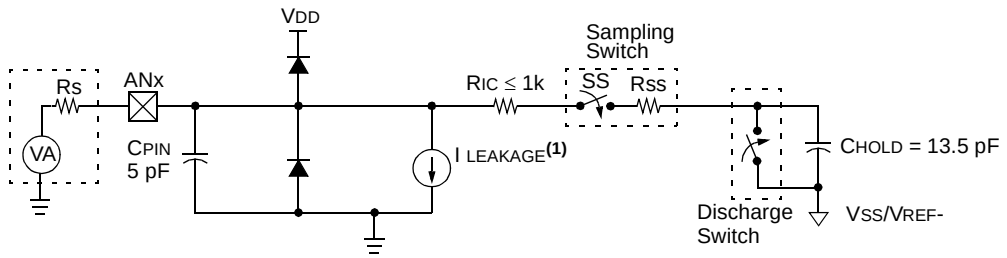

Legend: CPIN = Input Capacitance
I LEAKAGE = Leakage current at the pin due to various junctions
RIC = Interconnect Resistance
SS = Sampling Switch
CHOLD = Sample/Hold Capacitance

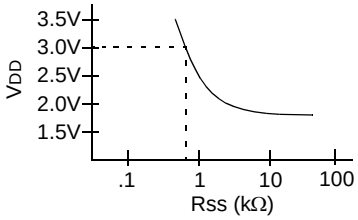

Note 1: See **Section 26.0 "Electrical Characteristics"**.

FIGURE 19-6: ADC TRANSFER FUNCTION

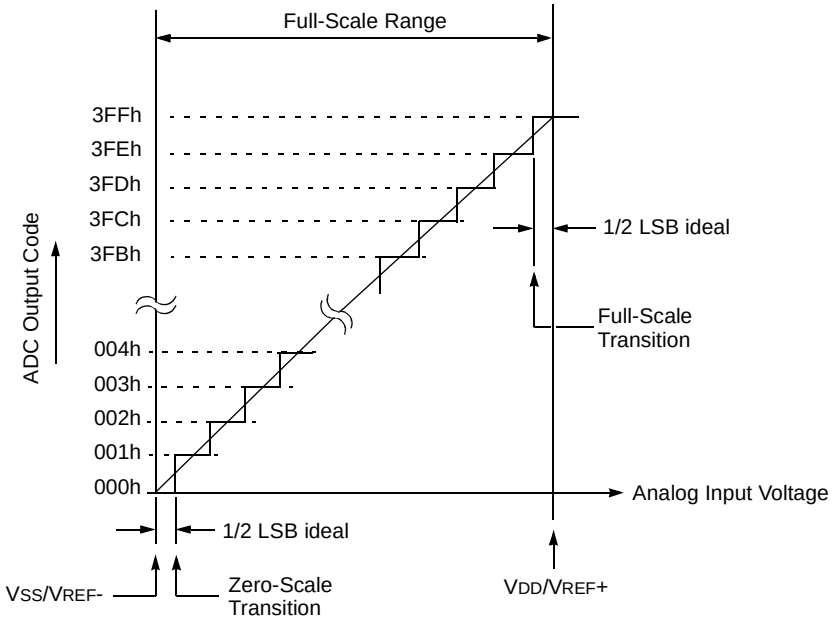

© 2010 Microchip Technology Inc.

TABLE 19-2: REGISTERS ASSOCIATED WITH A/D OPERATION

Name	Bit 7	Bit 6	Bit 5	Bit 4	Bit 3	Bit 2	Bit 1	Bit 0	Reset Values on page
INTCON	GIE/GIEH	PEIE/GIEL	TMR0IE	INT0IE	RBIE	TMR0IF	INT0IF	RBIF	59
PIR1	PSPIF(1)	ADIF	RCIF	TXIF	SSPIF	CCP1IF	TMR2IF	TMR1IF	62
PIE1	PSPIE(1)	ADIE	RCIE	TXIE	SSPIE	CCP1IE	TMR2IE	TMR1IE	62
IPR1	PSPIP(1)	ADIP	RCIP	TXIP	SSPIP	CCP1IP	TMR2IP	TMR1IP	62
PIR2	OSCFIF	C1IF	C2IF	EEIF	BCLIF	HLVDIF	TMR3IF	CCP2IF	62
PIE2	OSCFIE	C1IE	C2IE	EEIE	BCLIE	HLVDIE	TMR3IE	CCP2IE	62
IPR2	OSCFIP	C1IP	C2IP	EEIP	BCLIP	HLVDIP	TMR3IP	CCP2IP	62
ADRESH	A/D Result Register, High Byte								61
ADRESL	A/D Result Register, Low Byte								61
ADCON0	—	—	CHS3	CHS2	CHS1	CHS0	GO/$\overline{\text{DONE}}$	ADON	61
ADCON1	—	—	VCFG1	VCFG0	—	—	—	—	61
ADCON2	ADFM	—	ACQT2	ACQT1	ACQT0	ADCS2	ADCS1	ADCS0	61
ANSEL	ANS7(1)	ANS6(1)	ANS5(1)	ANS4	ANS3	ANS2	ANS1	ANS0	62
ANSELH	—	—	—	ANS12	ANS11	ANS10	ANS9	ANS8	62
PORTA	RA7(2)	RA6(2)	RA5	RA4	RA3	RA2	RA1	RA0	62
TRISA	TRISA7(2)	TRISA6(2)	PORTA Data Direction Control Register						62
PORTB	RB7	RB6	RB5	RB4	RB3	RB2	RB1	RB0	62
TRISB	PORTB Data Direction Control Register								62
LATB	PORTB Data Latch Register (Read and Write to Data Latch)								62
PORTE(4)	—	—	—	—	RE3(3)	RE2	RE1	RE0	62
TRISE(4)	IBF	OBF	IBOV	PSPMODE	—	TRISE2	TRISE1	TRISE0	62
LATE(4)	—	—	—	—	—	PORTE Data Latch Register			62

Legend: — = unimplemented, read as '0'. Shaded cells are not used for A/D conversion.

Note 1: These bits are unimplemented on PIC18F2XK20 devices; always maintain these bits clear.

2: PORTA<7:6> and their direction bits are individually configured as port pins based on various primary oscillator modes. When disabled, these bits read as '0'.

3: RE3 port bit is available only as an input pin when the MCLRE Configuration bit is '0'.

4: These registers are not implemented on PIC18F2XK20 devices.

NOTES:

© 2010 Microchip Technology Inc.

20.0 COMPARATOR MODULE

Comparators are used to interface analog circuits to a digital circuit by comparing two analog voltages and providing a digital indication of their relative magnitudes. The comparators are very useful mixed signal building blocks because they provide analog functionality independent of the program execution. The Analog Comparator module includes the following features:

- Independent comparator control
- Programmable input selection
- Comparator output is available internally/externally
- Programmable output polarity
- Interrupt-on-change
- Wake-up from Sleep
- Programmable Speed/Power optimization
- PWM shutdown
- Programmable and fixed voltage reference

20.1 Comparator Overview

A single comparator is shown in Figure 20-1 along with the relationship between the analog input levels and the digital output. When the analog voltage at VIN+ is less than the analog voltage at VIN-, the output of the comparator is a digital low level. When the analog voltage at VIN+ is greater than the analog voltage at VIN-, the output of the comparator is a digital high level.

FIGURE 20-1: SINGLE COMPARATOR

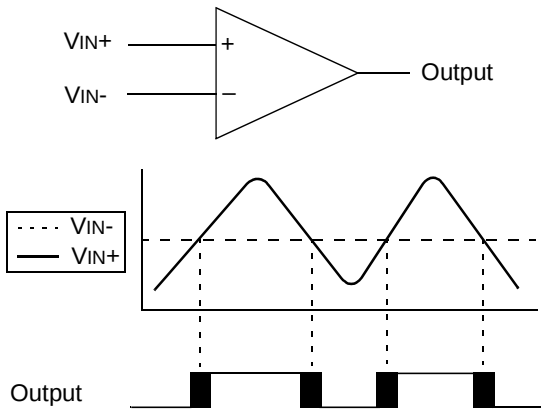

Note: The black areas of the output of the comparator represents the uncertainty due to input offsets and response time.

FIGURE 20-2: COMPARATOR C1 SIMPLIFIED BLOCK DIAGRAM

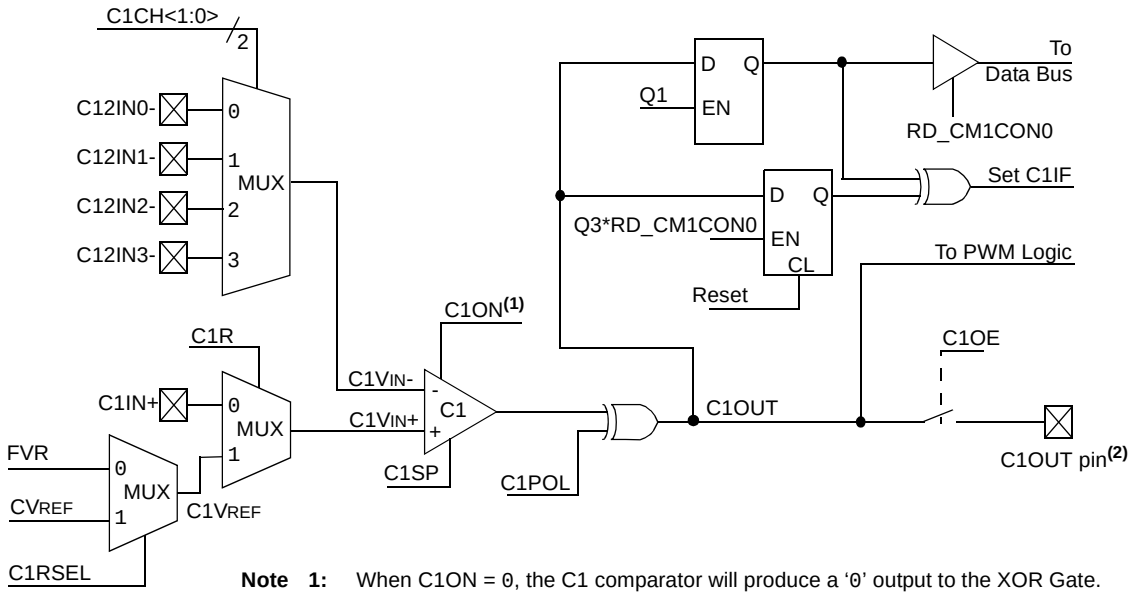

Note 1: When C1ON = 0, the C1 comparator will produce a '0' output to the XOR Gate.
2: Output shown for reference only. See I/O port pin block diagram for more detail.
3: Q1 and Q3 are phases of the four-phase system clock (FOSC).
4: Q1 is held high during Sleep mode.

FIGURE 20-3: COMPARATOR C2 SIMPLIFIED BLOCK DIAGRAM

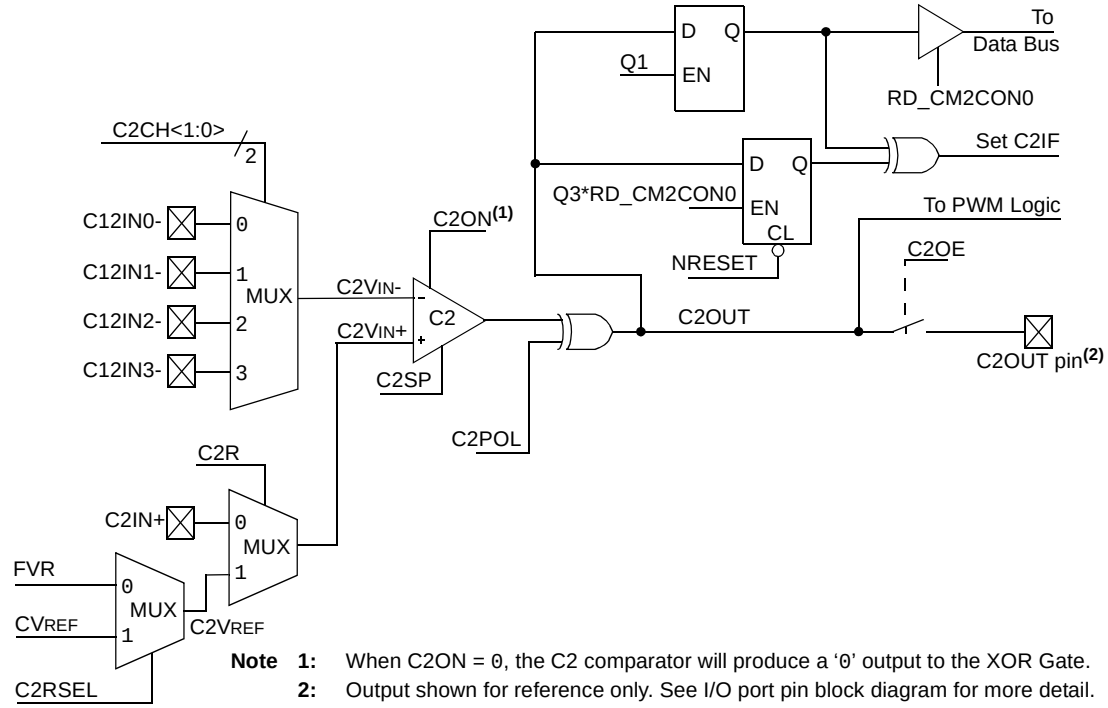

Note 1: When C2ON = 0, the C2 comparator will produce a '0' output to the XOR Gate.
2: Output shown for reference only. See I/O port pin block diagram for more detail.
3: Q1 and Q3 are phases of the four-phase system clock (FOSC).
4: Q1 is held high during Sleep mode.

© 2010 Microchip Technology Inc.

20.2 Comparator Control

Each comparator has a separate control and Configuration register: CM1CON0 for Comparator C1 and CM2CON0 for Comparator C2. In addition, Comparator C2 has a second control register, CM2CON1, for controlling the interaction with Timer1 and simultaneous reading of both comparator outputs.

The CM1CON0 and CM2CON0 registers (see Registers 20-1 and 20-2, respectively) contain the control and Status bits for the following:

- Enable
- Input selection
- Reference selection
- Output selection
- Output polarity
- Speed selection

20.2.1 COMPARATOR ENABLE

Setting the CxON bit of the CMxCON0 register enables the comparator for operation. Clearing the CxON bit disables the comparator resulting in minimum current consumption.

20.2.2 COMPARATOR INPUT SELECTION

The CxCH<1:0> bits of the CMxCON0 register direct one of four analog input pins to the comparator inverting input.

Note:	To use CxIN+ and C12INx- pins as analog inputs, the appropriate bits must be set in the ANSEL register and the corresponding TRIS bits must also be set to disable the output drivers.

20.2.3 COMPARATOR REFERENCE SELECTION

Setting the CxR bit of the CMxCON0 register directs an internal voltage reference or an analog input pin to the non-inverting input of the comparator. See **Section 21.0 "VOLTAGE REFERENCES"** for more information on the Internal Voltage Reference module.

20.2.4 COMPARATOR OUTPUT SELECTION

The output of the comparator can be monitored by reading either the CxOUT bit of the CMxCON0 register or the MCxOUT bit of the CM2CON1 register. In order to make the output available for an external connection, the following conditions must be true:

- CxOE bit of the CMxCON0 register must be set
- Corresponding TRIS bit must be cleared
- CxON bit of the CMxCON0 register must be set

Note 1:	The CxOE bit overrides the PORT data latch. Setting the CxON has no impact on the port override.
2:	The internal output of the comparator is latched with each instruction cycle. Unless otherwise specified, external outputs are not latched.

20.2.5 COMPARATOR OUTPUT POLARITY

Inverting the output of the comparator is functionally equivalent to swapping the comparator inputs. The polarity of the comparator output can be inverted by setting the CxPOL bit of the CMxCON0 register. Clearing the CxPOL bit results in a non-inverted output.

Table 20-1 shows the output state versus input conditions, including polarity control.

TABLE 20-1: COMPARATOR OUTPUT STATE VS. INPUT CONDITIONS

Input Condition	CxPOL	CxOUT
CxVIN- > CxVIN+	0	0
CxVIN- < CxVIN+	0	1
CxVIN- > CxVIN+	1	1
CxVIN- < CxVIN+	1	0

20.2.6 COMPARATOR SPEED SELECTION

The trade-off between speed or power can be optimized during program execution with the CxSP control bit. The default state for this bit is '1' which selects the normal speed mode. Device power consumption can be optimized at the cost of slower comparator propagation delay by clearing the CxSP bit to '0'.

20.3 Comparator Response Time

The comparator output is indeterminate for a period of time after the change of an input source or the selection of a new reference voltage. This period is referred to as the response time. The response time of the comparator differs from the settling time of the voltage reference. Therefore, both of these times must be considered when determining the total response time to a comparator input change. See the Comparator and Voltage Reference Specifications in **Section 26.0 "Electrical Characteristics"** for more details.

20.4 Comparator Interrupt Operation

The comparator interrupt flag can be set whenever there is a change in the output value of the comparator. Changes are recognized by means of a mismatch circuit which consists of two latches and an exclusive-or gate (see Figure 20-2 and Figure 20-3). One latch is updated with the comparator output level when the CMxCON0 register is read. This latch retains the value until the next read of the CMxCON0 register or the occurrence of a Reset. The other latch of the mismatch circuit is updated on every Q1 system clock. A mismatch condition will occur when a comparator output change is clocked through the second latch on the Q1 clock cycle. At this point the two mismatch latches have opposite output levels which is detected by the exclusive-or gate and fed to the interrupt circuitry. The mismatch condition persists until either the CMxCON0 register is read or the comparator output returns to the previous state.

Note 1: A write operation to the CMxCON0 register will also clear the mismatch condition because all writes include a read operation at the beginning of the write cycle.

2: Comparator interrupts will operate correctly regardless of the state of CxOE.

The comparator interrupt is set by the mismatch edge and not the mismatch level. This means that the interrupt flag can be reset without the additional step of reading or writing the CMxCON0 register to clear the mismatch registers. When the mismatch registers are cleared, an interrupt will occur upon the comparator's return to the previous state, otherwise no interrupt will be generated.

Software will need to maintain information about the status of the comparator output, as read from the CMxCON0 register, or CM2CON1 register, to determine the actual change that has occurred. See Figures 20-4 and 20-5.

The CxIF bit of the PIR2 register is the comparator interrupt flag. This bit must be reset by software by clearing it to '0'. Since it is also possible to write a '1' to this register, an interrupt can be generated.

In mid-range Compatibility mode the CxIE bit of the PIE2 register and the PEIE and GIE bits of the INTCON register must all be set to enable comparator interrupts. If any of these bits are cleared, the interrupt is not enabled, although the CxIF bit of the PIR2 register will still be set if an interrupt condition occurs.

20.4.1 PRESETTING THE MISMATCH LATCHES

The comparator mismatch latches can be preset to the desired state before the comparators are enabled. When the comparator is off the CxPOL bit controls the CxOUT level. Set the CxPOL bit to the desired CxOUT non-interrupt level while the CxON bit is cleared. Then, configure the desired CxPOL level in the same instruction that the CxON bit is set. Since all register writes are performed as a Read-Modify-Write, the mismatch latches will be cleared during the instruction Read phase and the actual configuration of the CxON and CxPOL bits will be occur in the final Write phase.

FIGURE 20-4: COMPARATOR INTERRUPT TIMING W/O CMxCON0 READ

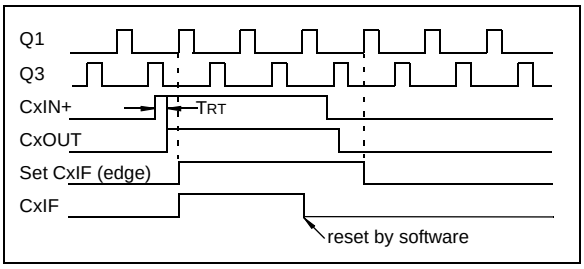

FIGURE 20-5: COMPARATOR INTERRUPT TIMING WITH CMxCON0 READ

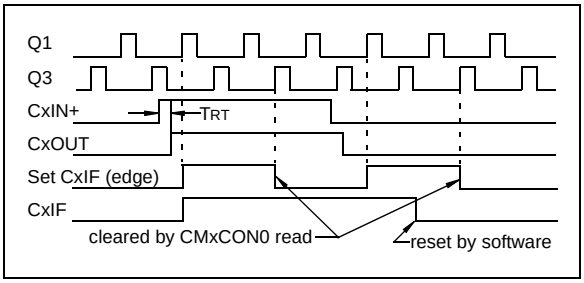

Note 1: If a change in the CMxCON0 register (CxOUT) should occur when a read operation is being executed (start of the Q2 cycle), then the CxIF interrupt flag of the PIR2 register may not get set.

2: When either comparator is first enabled, bias circuitry in the Comparator module may cause an invalid output from the comparator until the bias circuitry is stable. Allow about 1 μs for bias settling then clear the mismatch condition and interrupt flags before enabling comparator interrupts.

© 2010 Microchip Technology Inc.

20.5 Operation During Sleep

The comparator, if enabled before entering Sleep mode, remains active during Sleep. The additional current consumed by the comparator is shown separately in the **Section 26.0 "Electrical Characteristics"**. If the comparator is not used to wake the device, power consumption can be minimized while in Sleep mode by turning off the comparator. Each comparator is turned off by clearing the CxON bit of the CMxCON0 register.

A change to the comparator output can wake-up the device from Sleep. To enable the comparator to wake the device from Sleep, the CxIE bit of the PIE2 register and the PEIE bit of the INTCON register must be set. The instruction following the SLEEP instruction always executes following a wake from Sleep. If the GIE bit of the INTCON register is also set, the device will then execute the Interrupt Service Routine.

20.6 Effects of a Reset

A device Reset forces the CMxCON0 and CM2CON1 registers to their Reset states. This forces both comparators and the voltage references to their Off states.

REGISTER 20-1: CM1CON0: COMPARATOR 1 CONTROL REGISTER 0

R/W-0	R-0	R/W-0	R/W-0	R/W-0	R/W-0	R/W-0	R/W-0
C1ON	C1OUT	C1OE	C1POL	C1SP	C1R	C1CH1	C1CH0
bit 7							bit 0

Legend:			
R = Readable bit	W = Writable bit	U = Unimplemented bit, read as '0'	
-n = Value at POR	'1' = Bit is set	'0' = Bit is cleared	x = Bit is unknown

bit 7 **C1ON:** Comparator C1 Enable bit
1 = Comparator C1 is enabled
0 = Comparator C1 is disabled

bit 6 **C1OUT:** Comparator C1 Output bit
If C1POL = 1 (inverted polarity):
C1OUT = 0 when C1VIN+ > C1VIN-
C1OUT = 1 when C1VIN+ < C1VIN-
If C1POL = 0 (non-inverted polarity):
C1OUT = 1 when C1VIN+ > C1VIN-
C1OUT = 0 when C1VIN+ < C1VIN-

bit 5 **C1OE:** Comparator C1 Output Enable bit
1 = C1OUT is present on the C1OUT pin(1)
0 = C1OUT is internal only

bit 4 **C1POL:** Comparator C1 Output Polarity Select bit
1 = C1OUT logic is inverted
0 = C1OUT logic is not inverted

bit 3 **C1SP:** Comparator C1 Speed/Power Select bit
1 = C1 operates in normal power, higher speed mode
0 = C1 operates in low-power, low-speed mode

bit 2 **C1R:** Comparator C1 Reference Select bit (non-inverting input)
1 = C1VIN+ connects to C1VREF output
0 = C1VIN+ connects to C1IN+ pin

bit 1-0 **C1CH<1:0>:** Comparator C1 Channel Select bit
00 = C12IN0- pin of C1 connects to C1VIN-
01 = C12IN1- pin of C1 connects to C1VIN-
10 = C12IN2- pin of C1 connects to C1VIN-
11 = C12IN3- pin of C1 connects to C1VIN-

Note 1: Comparator output requires the following three conditions: C1OE = 1, C1ON = 1 and corresponding port TRIS bit = 0.

© 2010 Microchip Technology Inc.

REGISTER 20-2: CM2CON0: COMPARATOR 2 CONTROL REGISTER 0

R/W-0	R-0	R/W-0	R/W-0	R/W-0	R/W-0	R/W-0	R/W-0
C2ON	C2OUT	C2OE	C2POL	C2SP	C2R	C2CH1	C2CH0
bit 7							bit 0

Legend:			
R = Readable bit	W = Writable bit	U = Unimplemented bit, read as '0'	
-n = Value at POR	'1' = Bit is set	'0' = Bit is cleared	x = Bit is unknown

bit 7 **C2ON:** Comparator C2 Enable bit
1 = Comparator C2 is enabled
0 = Comparator C2 is disabled

bit 6 **C2OUT:** Comparator C2 Output bit
If C2POL = 1 (inverted polarity):
C2OUT = 0 when C2VIN+ > C2VIN-
C2OUT = 1 when C2VIN+ < C2VIN-
If C2POL = 0 (non-inverted polarity):
C2OUT = 1 when C2VIN+ > C2VIN-
C2OUT = 0 when C2VIN+ < C2VIN-

bit 5 **C2OE:** Comparator C2 Output Enable bit
1 = C2OUT is present on C2OUT pin(1)
0 = C2OUT is internal only

bit 4 **C2POL:** Comparator C2 Output Polarity Select bit
1 = C2OUT logic is inverted
0 = C2OUT logic is not inverted

bit 3 **C2SP:** Comparator C2 Speed/Power Select bit
1 = C2 operates in normal power, higher speed mode
0 = C2 operates in low-power, low-speed mode

bit 2 **C2R:** Comparator C2 Reference Select bits (non-inverting input)
1 = C2VIN+ connects to C2VREF
0 = C2VIN+ connects to C2IN+ pin

bit 1-0 **C2CH<1:0>:** Comparator C2 Channel Select bits
00 = C12IN0- pin of C2 connects to C2VIN-
01 = C12IN1- pin of C2 connects to C2VIN-
10 = C12IN2- pin of C2 connects to C2VIN-
11 = C12IN3- pin of C2 connects to C2VIN-

Note 1: Comparator output requires the following three conditions: C2OE = 1, C2ON = 1 and corresponding port TRIS bit = 0.

20.7 Analog Input Connection Considerations

A simplified circuit for an analog input is shown in Figure 20-6. Since the analog input pins share their connection with a digital input, they have reverse biased ESD protection diodes to VDD and VSS. The analog input, therefore, must be between VSS and VDD. If the input voltage deviates from this range by more than 0.6V in either direction, one of the diodes is forward biased and a latch-up may occur.

A maximum source impedance of 10 kΩ is recommended for the analog sources. Also, any external component connected to an analog input pin, such as a capacitor or a Zener diode, should have very little leakage current to minimize inaccuracies introduced.

Note 1: When reading a PORT register, all pins configured as analog inputs will read as a '0'. Pins configured as digital inputs will convert as an analog input, according to the input specification.

2: Analog levels on any pin defined as a digital input, may cause the input buffer to consume more current than is specified.

FIGURE 20-6: ANALOG INPUT MODEL

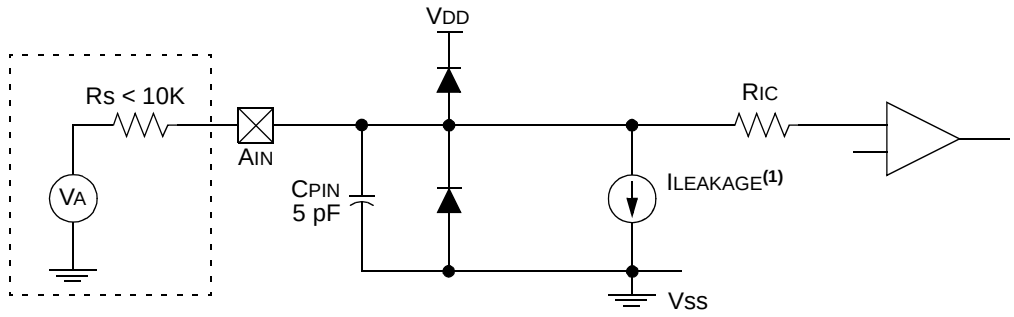

Legend: CPIN = Input Capacitance
ILEAKAGE = Leakage Current at the pin due to various junctions
RIC = Interconnect Resistance
RS = Source Impedance
VA = Analog Voltage

Note 1: See **Section 26.0 "Electrical Characteristics"**.

© 2010 Microchip Technology Inc.

20.8 Additional Comparator Features

There are two additional comparator features:

- Simultaneous read of comparator outputs
- Internal reference selection

20.8.1 SIMULTANEOUS COMPARATOR OUTPUT READ

The MC1OUT and MC2OUT bits of the CM2CON1 register are mirror copies of both comparator outputs. The ability to read both outputs simultaneously from a single register eliminates the timing skew of reading separate registers.

Note 1:	Obtaining the status of C1OUT or C2OUT by reading CM2CON1 does not affect the comparator interrupt mismatch registers.

20.8.2 INTERNAL REFERENCE SELECTION

There are two internal voltage references available to the non-inverting input of each comparator. One of these is the 1.2V Fixed Voltage Reference (FVR) and the other is the variable Comparator Voltage Reference (CV_{REF}). The CxRSEL bit of the CM2CON register determines which of these references is routed to the Comparator Voltage reference output (C_XV_{REF}). Further routing to the comparator is accomplished by the CxR bit of the CMxCON0 register. See **Section 21.1 "Comparator Voltage Reference"** and Figure 20-2 and Figure 20-3 for more detail.

REGISTER 20-3: CM2CON1: COMPARATOR 2 CONTROL REGISTER 1

R-0	R-0	R/W-0	R/W-0	U-0	U-0	U-0	U-0
MC1OUT	MC2OUT	C1RSEL	C2RSEL	—	—	—	—
bit 7							bit 0

Legend:			
R = Readable bit	W = Writable bit	U = Unimplemented bit, read as ‘0’	
-n = Value at POR	‘1’ = Bit is set	‘0’ = Bit is cleared	x = Bit is unknown

bit 7 **MC1OUT:** Mirror Copy of C1OUT bit

bit 6 **MC2OUT:** Mirror Copy of C2OUT bit

bit 5 **C1RSEL:** Comparator C1 Reference Select bit
1 = CV_{REF} routed to $C1V_{REF}$ input
0 = FVR (1.2 Volt fixed voltage reference) routed to $C1V_{REF}$ input

bit 4 **C2RSEL:** Comparator C2 Reference Select bit
1 = CV_{REF} routed to $C2V_{REF}$ input
0 = FVR (1.2 Volt fixed voltage reference) routed to $C2V_{REF}$ input

bit 3-0 **Unimplemented:** Read as ‘0’

TABLE 20-2: REGISTERS ASSOCIATED WITH COMPARATOR MODULE

Name	Bit 7	Bit 6	Bit 5	Bit 4	Bit 3	Bit 2	Bit 1	Bit 0	Reset Values on page
CM1CON0	C1ON	C1OUT	C1OE	C1POL	C1SP	C1R	C1CH1	C1CH0	62
CM2CON0	C2ON	C2OUT	C2OE	C2POL	C2SP	C2R	C2CH1	C2CH0	62
CM2CON1	MC1OUT	MC2OUT	C1RSEL	C2RSEL	—	—	—	—	63
CVRCON	CVREN	CVROE	CVRR	CVRSS	CVR3	CVR2	CVR1	CVR0	61
CVRCON2	FVREN	FVRST	—	—	—	—	—	—	61
INTCON	GIE/GIEH	PEIE/GIEL	TMR0IE	INT0IE	RBIE	TMR0IF	INT0IF	RBIF	59
PIR2	OSCFIF	C1IF	C2IF	EEIF	BCLIF	HLVDIF	TMR3IF	CCP2IF	62
PIE2	OSCFIE	C1IE	C2IE	EEIE	BCLIE	HLVDIE	TMR3IE	CCP2IE	62
IPR2	OSCFIP	C1IP	C2IP	EEIP	BCLIP	HLVDIP	TMR3IP	CCP2IP	62
PORTA	RA7(1)	RA6(1)	RA5	RA4	RA3	RA2	RA1	RA0	62
LATA	LATA7(1)	LATA6(1)	PORTA Data Latch Register (Read and Write to Data Latch)						62
TRISA	TRISA7(1)	TRISA6(1)	PORTA Data Direction Control Register						62

Legend: — = unimplemented, read as '0'. Shaded cells are unused by the comparator module.

Note 1: PORTA<7:6> and their direction and latch bits are individually configured as port pins based on various primary oscillator modes. When disabled, these bits read as '0'.

© 2010 Microchip Technology Inc.

21.0 VOLTAGE REFERENCES

There are two independent voltage references available:

- Programmable Comparator Voltage Reference
- 1.2V Fixed Voltage Reference

21.1 Comparator Voltage Reference

The Comparator Voltage Reference module provides an internally generated voltage reference for the comparators. The following features are available:

- Independent from Comparator operation
- Two 16-level voltage ranges
- Output clamped to VSS
- Ratiometric with VDD
- 1.2 Fixed Reference Voltage (FVR)

The CVRCON register (Register 21-1) controls the Voltage Reference module shown in Figure 21-1.

21.1.1 INDEPENDENT OPERATION

The comparator voltage reference is independent of the comparator configuration. Setting the CVREN bit of the CVRCON register will enable the voltage reference by allowing current to flow in the CVREF voltage divider. When both the CVREN bit is cleared, current flow in the CVREF voltage divider is disabled minimizing the power drain of the voltage reference peripheral.

21.1.2 OUTPUT VOLTAGE SELECTION

The CVREF voltage reference has 2 ranges with 16 voltage levels in each range. Range selection is controlled by the CVRR bit of the CVRCON register. The 16 levels are set with the CVR<3:0> bits of the CVRCON register.

The CVREF output voltage is determined by the following equations:

EQUATION 21-1: CVREF OUTPUT VOLTAGE

CVRR = 1 (low range):

$$CV_{REF} = (CV_{RSRC}/24) \times CVR<3:0> + V_{REF-}$$

CVRR = 0 (high range):

$$CV_{REF} = (CV_{RSRC}/32) \times (8 + CVR<3:0>) + V_{REF-}$$

$$CV_{RSRC} = V_{DD} \text{ or } [(V_{REF+}) - (V_{REF-})]$$

Note: VREF- is 0 when CVRSS = 0

The full range of VSS to VDD cannot be realized due to the construction of the module. See Figure 21-1.

21.1.3 OUTPUT CLAMPED TO VSS

The CVREF output voltage can be set to Vss with no power consumption by configuring CVRCON as follows:

- CVREN = 0
- CVRR = 1
- CVR<3:0> = 0000

This allows the comparator to detect a zero-crossing while not consuming additional CVREF module current.

21.1.4 OUTPUT RATIOMETRIC TO VDD

The comparator voltage reference is VDD derived and therefore, the CVREF output changes with fluctuations in VDD. The tested absolute accuracy of the Comparator Voltage Reference can be found in **Section 26.0 "Electrical Characteristics"**.

21.1.5 VOLTAGE REFERENCE OUTPUT

The CVREF voltage reference can be output to the device CVREF pin by setting the CVROE bit of the CVRCON register to '1'. Selecting the reference voltage for output on the CVREF pin automatically overrides the digital output buffer and digital input threshold detector functions of that pin. Reading the CVREF pin when it has been configured for reference voltage output will always return a '0'.

Due to the limited current drive capability, a buffer must be used on the voltage reference output for external connections to CVREF. Figure 21-2 shows an example buffering technique.

21.1.6 OPERATION DURING SLEEP

When the device wakes up from Sleep through an interrupt or a Watchdog Timer time-out, the contents of the CVRCON register are not affected. To minimize current consumption in Sleep mode, the voltage reference should be disabled.

21.1.7 EFFECTS OF A RESET

A device Reset affects the following:

- Comparator voltage reference is disabled
- Fixed voltage reference is disabled
- CVREF is removed from the CVREF pin
- The high-voltage range is selected
- The CVR<3:0> range select bits are cleared

21.2 FVR Reference Module

The FVR reference is a stable fixed voltage reference, independent of VDD, with a nominal output voltage of 1.2V. This reference can be enabled by setting the FVREN bit of the CVRCON2 register to '1'. The FVR defaults to on when any one or more of the HFINTOSC, HLVD, or BOR functions are enabled. The FVR voltage reference can be routed to the comparators or an ADC input channel.

21.2.1 FVR STABILIZATION PERIOD

When the Fixed Voltage Reference module is enabled, it will require some time for the reference and its amplifier circuits to stabilize. The user program must include a small delay routine to allow the module to settle. The FVRST stable bit of the CVRCON2 register also indicates that the FVR reference has been operating long enough to be stable. See **Section 26.0 "Electrical Characteristics"** for the minimum delay requirement.

FIGURE 21-1: VOLTAGE REFERENCE BLOCK DIAGRAM

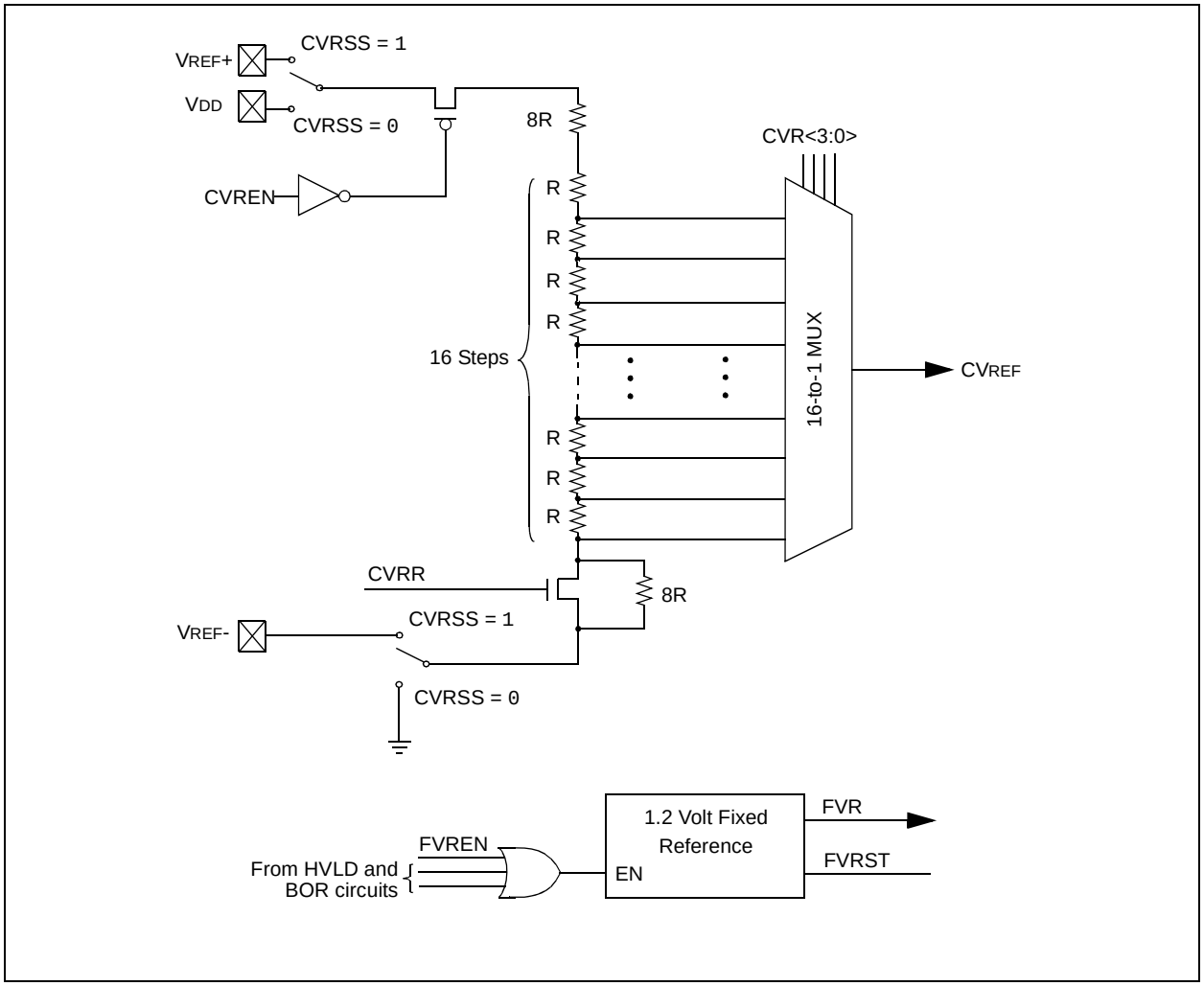

© 2010 Microchip Technology Inc.

FIGURE 21-2: VOLTAGE REFERENCE OUTPUT BUFFER EXAMPLE

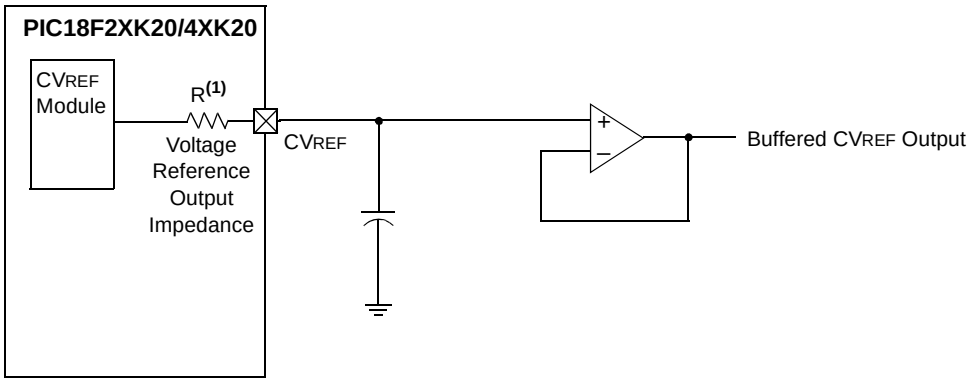

Note 1: R is dependent upon the voltage reference Configuration bits, CVR<3:0> and CVRR.

REGISTER 21-1: CVRCON: COMPARATOR VOLTAGE REFERENCE CONTROL REGISTER

R/W-0	R/W-0	R/W-0	R/W-0	R/W-0	R/W-0	R/W-0	R/W-0
CVREN	CVROE(1)	CVRR	CVRSS	CVR3	CVR2	CVR1	CVR0
bit 7							bit 0

Legend:			
R = Readable bit	W = Writable bit	U = Unimplemented bit, read as '0'	
-n = Value at POR	'1' = Bit is set	'0' = Bit is cleared	x = Bit is unknown

bit 7 **CVREN**: Comparator Voltage Reference Enable bit
1 = CVREF circuit powered on
0 = CVREF circuit powered down

bit 6 **CVROE**: Comparator VREF Output Enable bit(1)
1 = CVREF voltage level is also output on the CVREF pin
0 = CVREF voltage is disconnected from the CVREF pin

bit 5 **CVRR**: Comparator VREF Range Selection bit
1 = 0 to 0.667 CVRSRC, with CVRSRC/24 step size (low range)
0 = 0.25 CVRSRC to 0.75 CVRSRC, with CVRSRC/32 step size (high range)

bit 4 **CVRSS**: Comparator VREF Source Selection bit
1 = Comparator reference source, CVRSRC = (VREF+) – (VREF-)
0 = Comparator reference source, CVRSRC = VDD – VSS

bit 3-0 **CVR<3:0>:** Comparator VREF Value Selection bits (0 ≤ (CVR<3:0>) ≤ 15)
When CVRR = 1:
CVREF = ((CVR<3:0>)/24) • (CVRSRC) + VREF-
When CVRR = 0:
CVREF = (CVRSRC/4) + ((CVR<3:0>)/32) • (CVRSRC) + VREF-

Note 1: CVROE overrides the TRISA<2> bit setting.

REGISTER 21-2: CVRCON2: COMPARATOR VOLTAGE REFERENCE CONTROL 2 REGISTER

R/W-0	R-0	U-0	U-0	U-0	U-0	U-0	U-0
FVREN	FVRST	—	—	—	—	—	—
bit 7							bit 0

Legend:			
R = Readable bit	W = Writable bit	U = Unimplemented bit, read as '0'	
-n = Value at POR	'1' = Bit is set	'0' = Bit is cleared	x = Bit is unknown

bit 7 **FVREN**: Fixed Voltage Reference Enable bit
1 = FVR circuit powered on
0 = FVR circuit not enabled by FVREN. Other peripherals may enable FVR.

bit 6 **FVRST**: Fixed Voltage Stable Status bit
1 = FVR is stable and can be used.
0 = FVR is not stable and should not be used.

bit 5-0 **Unimplemented**: Read as '0'.

TABLE 21-1: REGISTERS ASSOCIATED WITH COMPARATOR VOLTAGE REFERENCE

Name	Bit 7	Bit 6	Bit 5	Bit 4	Bit 3	Bit 2	Bit 1	Bit 0	Reset Values on page
CVRCON	CVREN	CVROE	CVRR	CVRSS	CVR3	CVR2	CVR1	CVR0	62
CVRCON2	FVREN	FVRST	—	—	—	—	—	—	61
CM1CON0	C1ON	C1OUT	C1OE	C1POL	C1SP	C1R	C1CH1	C1CH0	62
CM2CON0	C2ON	C2OUT	C2OE	C2POL	C2SP	C2R	C2CH1	C2CH0	62
CM2CON1	MC1OUT	MC2OUT	C1RSEL	C2RSEL	—	—	—	—	63
TRISA	TRISA7(1)	TRISA6(1)	PORTA Data Direction Control Register						62

Legend: Shaded cells are not used with the comparator voltage reference.
Note 1: PORTA pins are enabled based on oscillator configuration.

© 2010 Microchip Technology Inc.

22.0 HIGH/LOW-VOLTAGE DETECT (HLVD)

PIC18F2XK20/4XK20 devices have a High/Low-Voltage Detect module (HLVD). This is a programmable circuit that allows the user to specify both a device voltage trip point and the direction of change from that point. If the device experiences an excursion past the trip point in that direction, an interrupt flag is set. If the interrupt is enabled, the program execution will branch to the interrupt vector address and the software can then respond to the interrupt.

The High/Low-Voltage Detect Control register (Register 22-1) completely controls the operation of the HLVD module. This allows the circuitry to be "turned off" by the user under software control, which minimizes the current consumption for the device.

The block diagram for the HLVD module is shown in Figure 22-1.

The module is enabled by setting the HLVDEN bit. Each time that the HLVD module is enabled, the circuitry requires some time to stabilize. The IRVST bit is a read-only bit and is used to indicate when the circuit is stable. The module can only generate an interrupt after the circuit is stable and IRVST is set.

The VDIRMAG bit determines the overall operation of the module. When VDIRMAG is cleared, the module monitors for drops in V_{DD} below a predetermined set point. When the bit is set, the module monitors for rises in V_{DD} above the set point.

REGISTER 22-1: HLVDCON: HIGH/LOW-VOLTAGE DETECT CONTROL REGISTER

R/W-0	U-0	R-0	R/W-0	R/W-0	R/W-1	R/W-0	R/W-1
VDIRMAG	—	IRVST	HLVDEN	HLVDL3(1)	HLVDL2(1)	HLVDL1(1)	HLVDL0(1)
bit 7							bit 0

Legend:			
R = Readable bit	W = Writable bit	U = Unimplemented	C = Clearable only bit
-n = Value at POR	'1' = Bit is set	'0' = Bit is cleared	x = Bit is unknown

bit 7 **VDIRMAG:** Voltage Direction Magnitude Select bit
1 = Event occurs when voltage equals or exceeds trip point (HLVDL<3:0>)
0 = Event occurs when voltage equals or falls below trip point (HLVDL<3:0>)

bit 6 **Unimplemented:** Read as '0'

bit 5 **IRVST:** Internal Reference Voltage Stable Flag bit
1 = Indicates that the voltage detect logic will generate the interrupt flag at the specified voltage range
0 = Indicates that the voltage detect logic will not generate the interrupt flag at the specified voltage range and the HLVD interrupt should not be enabled

bit 4 **HLVDEN:** High/Low-Voltage Detect Power Enable bit
1 = HLVD enabled
0 = HLVD disabled

bit 3-0 **HLVDL<3:0>:** Voltage Detection Limit bits(1)
1111 = External analog input is used (input comes from the HLVDIN pin)
1110 = Maximum setting
.
.
.
0000 = Minimum setting

Note 1: See Table 26-4 for specifications.

22.1 Operation

When the HLVD module is enabled, a comparator uses an internally generated reference voltage as the set point. The set point is compared with the trip point, where each node in the resistor divider represents a trip point voltage. The “trip point” voltage is the voltage level at which the device detects a high or low-voltage event, depending on the configuration of the module. When the supply voltage is equal to the trip point, the voltage tapped off of the resistor array is equal to the internal reference voltage generated by the voltage reference module. The comparator then generates an interrupt signal by setting the HLVDIF bit.

The trip point voltage is software programmable to any one of 16 values. The trip point is selected by programming the HLVDL<3:0> bits of the HLVDCON register.

The HLVD module has an additional feature that allows the user to supply the trip voltage to the module from an external source. This mode is enabled when bits HLVDL<3:0> are set to ‘1111’. In this state, the comparator input is multiplexed from the external input pin, HLVDIN. This gives users flexibility because it allows them to configure the High/Low-Voltage Detect interrupt to occur at any voltage in the valid operating range.

FIGURE 22-1: HLVD MODULE BLOCK DIAGRAM (WITH EXTERNAL INPUT)

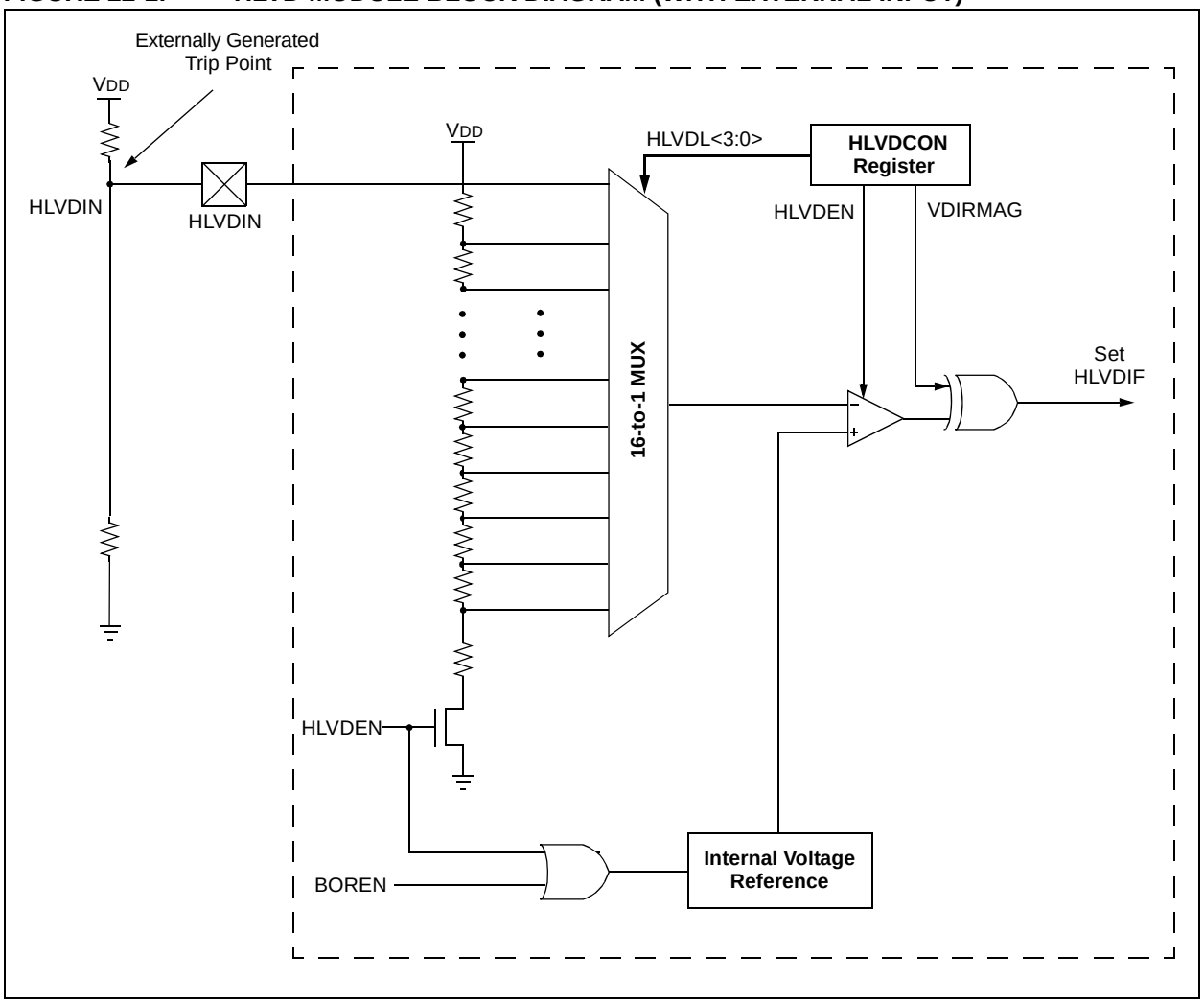

© 2010 Microchip Technology Inc.

22.2 HLVD Setup

The following steps are needed to set up the HLVD module:

1. Write the value to the HLVDL<3:0> bits that selects the desired HLVD trip point.
2. Set the VDIRMAG bit to detect high voltage (VDIRMAG = 1) or low voltage (VDIRMAG = 0).
3. Enable the HLVD module by setting the HLVDEN bit.
4. Clear the HLVD interrupt flag bit of the PIR2 register, which may have been set from a previous interrupt.
5. Enable the HLVD interrupt if interrupts are desired by setting the HLVDIE bit of the PIE2 register, and the GIE and PEIE bits of the INTCON register. An interrupt will not be generated until the IRVST bit is set.

22.3 Current Consumption

When the module is enabled, the HLVD comparator and voltage divider are enabled and will consume static current. The total current consumption, when enabled, is specified in electrical specification parameter D024B.

Depending on the application, the HLVD module does not need to be operating constantly. To decrease the current requirements, the HLVD circuitry may only need to be enabled for short periods where the voltage is checked. After doing the check, the HLVD module may be disabled.

22.4 HLVD Start-up Time

The internal reference voltage of the HLVD module, specified in electrical specification parameter D420, may be used by other internal circuitry, such as the Programmable Brown-out Reset. If the HLVD or other circuits using the voltage reference are disabled to lower the device's current consumption, the reference voltage circuit will require time to become stable before a low or high-voltage condition can be reliably detected. This start-up time, TIRVST, is an interval that is independent of device clock speed. It is specified in electrical specification parameter 36.

The HLVD interrupt flag is not enabled until TIRVST has expired and a stable reference voltage is reached. For this reason, brief excursions beyond the set point may not be detected during this interval. Refer to Figure 22-2 or Figure 22-3.

FIGURE 22-2: LOW-VOLTAGE DETECT OPERATION (VDIRMAG = 0)

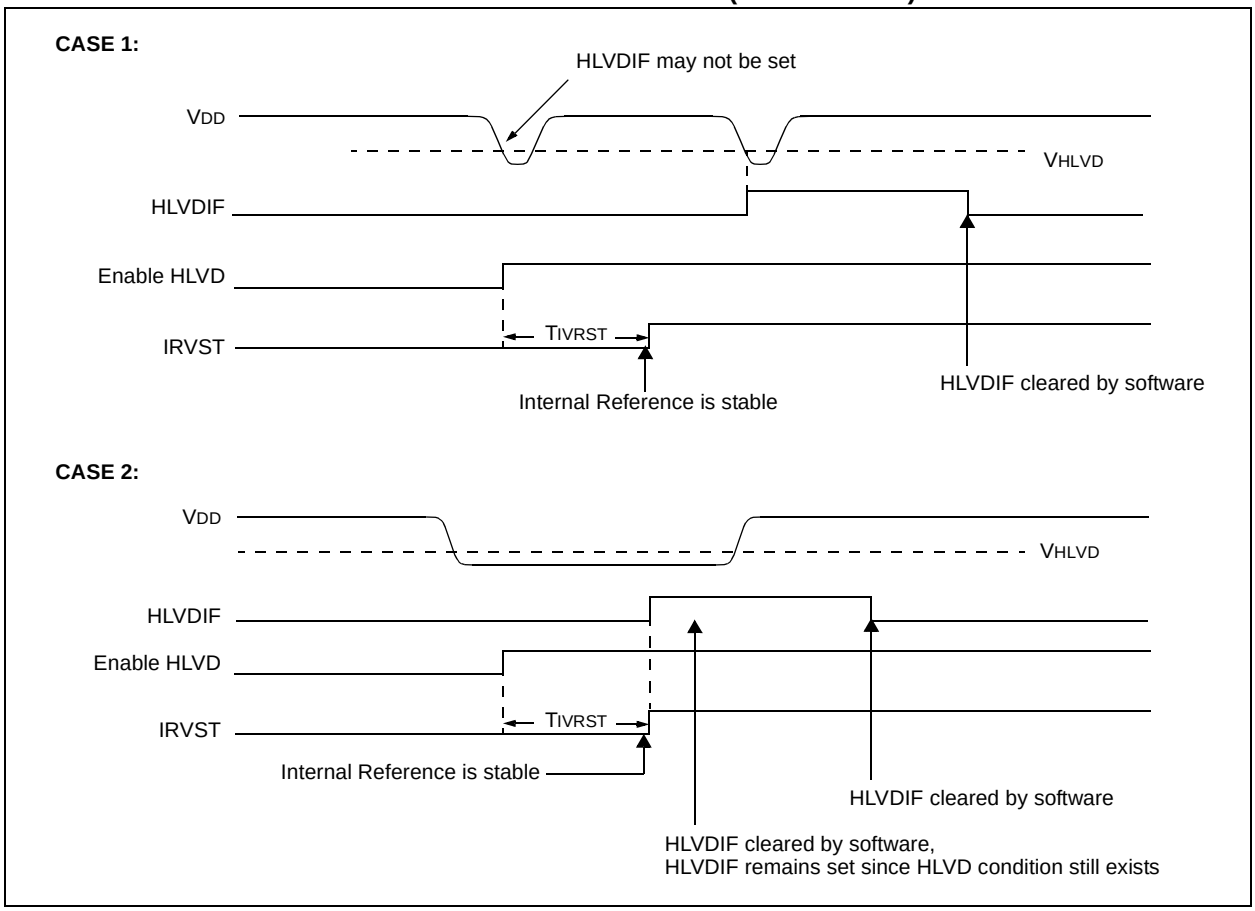

FIGURE 22-3: HIGH-VOLTAGE DETECT OPERATION (VDIRMAG = 1)

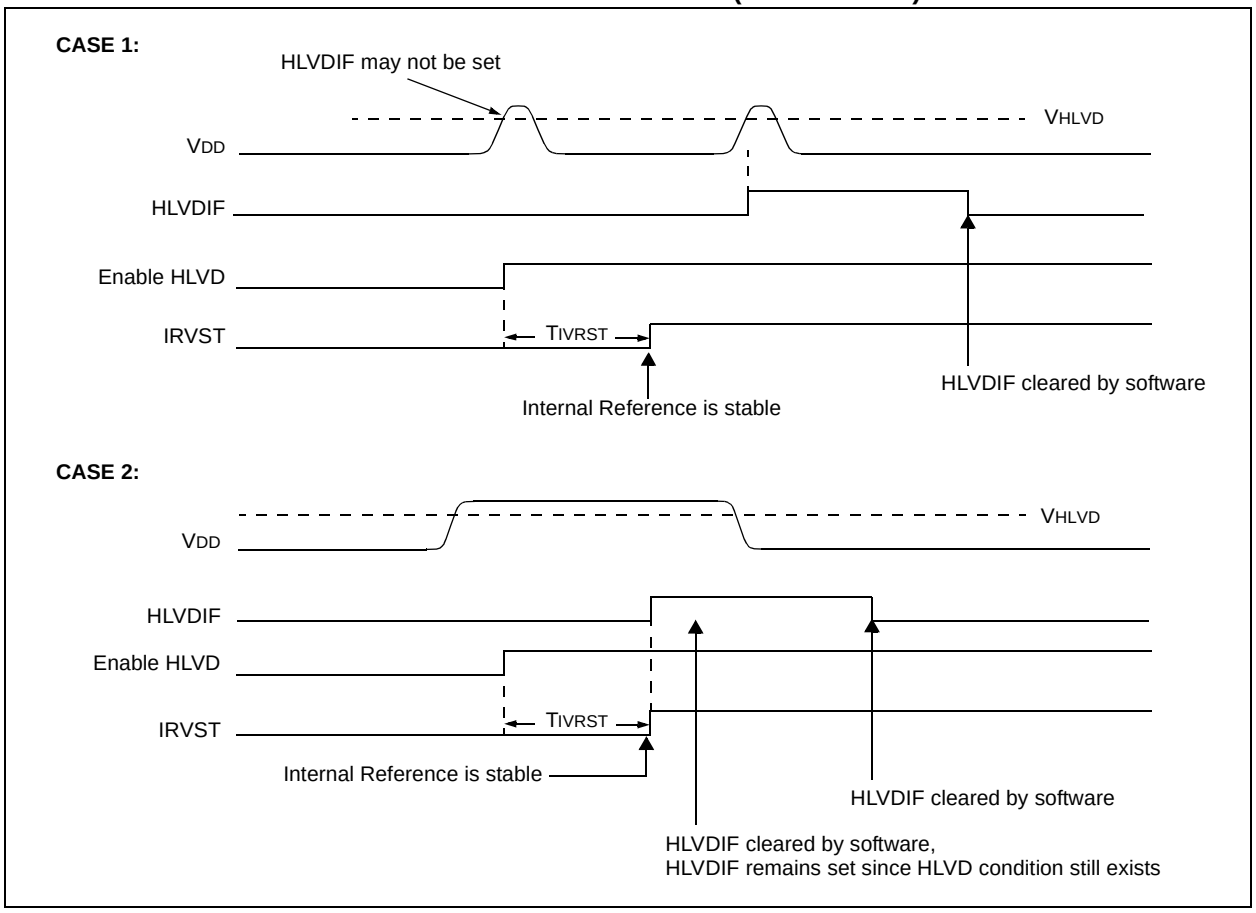

© 2010 Microchip Technology Inc.

22.5 Applications

In many applications, the ability to detect a drop below, or rise above, a particular threshold is desirable. For example, the HLVD module could be periodically enabled to detect Universal Serial Bus (USB) attach or detach. This assumes the device is powered by a lower voltage source than the USB when detached. An attach would indicate a high-voltage detect from, for example, 3.3V to 5V (the voltage on USB) and vice versa for a detach. This feature could save a design a few extra components and an attach signal (input pin).

For general battery applications, Figure 22-4 shows a possible voltage curve. Over time, the device voltage decreases. When the device voltage reaches voltage V_A, the HLVD logic generates an interrupt at time T_A. The interrupt could cause the execution of an ISR, which would allow the application to perform "housekeeping tasks" and perform a controlled shutdown before the device voltage exits the valid operating range at T_B. The HLVD, thus, would give the application a time window, represented by the difference between T_A and T_B, to safely exit.

FIGURE 22-4: TYPICAL LOW-VOLTAGE DETECT APPLICATION

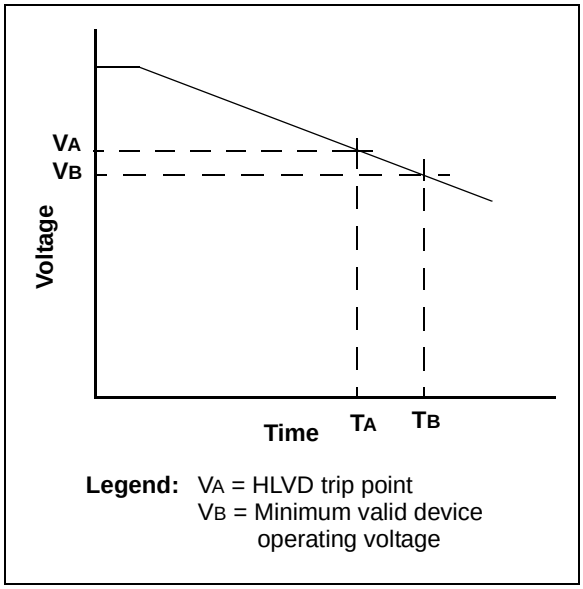

TABLE 22-1: REGISTERS ASSOCIATED WITH HIGH/LOW-VOLTAGE DETECT MODULE

Name	Bit 7	Bit 6	Bit 5	Bit 4	Bit 3	Bit 2	Bit 1	Bit 0	Reset Values on Page
HLVDCON	VDIRMAG	—	IRVST	HLVDEN	HLVDL3	HLVDL2	HLVDL1	HLVDL0	60
INTCON	GIE/GIEH	PEIE/GIEL	TMR0IE	INT0IE	RBIE	TMR0IF	INT0IF	RBIF	59
PIR2	OSCFIF	C1IF	C2IF	EEIF	BCLIF	HLVDIF	TMR3IF	CCP2IF	62
PIE2	OSCFIE	C1IE	C2IE	EEIE	BCLIE	HLVDIE	TMR3IE	CCP2IE	62
IPR2	OSCFIP	C1IP	C2IP	EEIP	BCLIP	HLVDIP	TMR3IP	CCP2IP	62

Legend: — = unimplemented, read as '0'. Shaded cells are unused by the HLVD module.

NOTES:

© 2010 Microchip Technology Inc.

23.0 SPECIAL FEATURES OF THE CPU

PIC18F2XK20/4XK20 devices include several features intended to maximize reliability and minimize cost through elimination of external components. These are:

- Oscillator Selection
- Resets:
  - Power-on Reset (POR)
  - Power-up Timer (PWRT)
  - Oscillator Start-up Timer (OST)
  - Brown-out Reset (BOR)
- Interrupts
- Watchdog Timer (WDT)
- Code Protection
- ID Locations
- In-Circuit Serial Programming™

The oscillator can be configured for the application depending on frequency, power, accuracy and cost. All of the options are discussed in detail in **Section 2.0 "Oscillator Module (With Fail-Safe Clock Monitor)"**.

A complete discussion of device Resets and interrupts is available in previous sections of this data sheet.

In addition to their Power-up and Oscillator Start-up Timers provided for Resets, PIC18F2XK20/4XK20 devices have a Watchdog Timer, which is either permanently enabled via the Configuration bits or software controlled (if configured as disabled).

The inclusion of an internal RC oscillator also provides the additional benefits of a Fail-Safe Clock Monitor (FSCM) and Two-Speed Start-up. FSCM provides for background monitoring of the peripheral clock and automatic switchover in the event of its failure. Two-Speed Start-up enables code to be executed almost immediately on start-up, while the primary clock source completes its start-up delays.

All of these features are enabled and configured by setting the appropriate Configuration register bits.

23.1 Configuration Bits

The Configuration bits can be programmed (read as '0') or left unprogrammed (read as '1') to select various device configurations. These bits are mapped starting at program memory location 300000h.

The user will note that address 300000h is beyond the user program memory space. In fact, it belongs to the configuration memory space (300000h-3FFFFFh), which can only be accessed using table reads and table writes.

Programming the Configuration registers is done in a manner similar to programming the Flash memory. The WR bit in the EECON1 register starts a self-timed write to the Configuration register. In normal operation mode, a TBLWT instruction with the TBLPTR pointing to the Configuration register sets up the address and the data for the Configuration register write. Setting the WR bit starts a long write to the Configuration register. The Configuration registers are written a byte at a time. To write or erase a configuration cell, a TBLWT instruction can write a '1' or a '0' into the cell. For additional details on Flash programming, refer to **Section 6.5 "Writing to Flash Program Memory"**.

TABLE 23-1: CONFIGURATION BITS AND DEVICE IDs

File Name		Bit 7	Bit 6	Bit 5	Bit 4	Bit 3	Bit 2	Bit 1	Bit 0	Default/ Unprogrammed Value
300001h	CONFIG1H	IESO	FCMEN	—	—	FOSC3	FOSC2	FOSC1	FOSC0	00-- 0111
300002h	CONFIG2L	—	—	—	BORV1	BORV0	BOREN1	BOREN0	$\overline{\text{PWRTEN}}$	---1 1111
300003h	CONFIG2H	—	—	—	WDTPS3	WDTPS2	WDTPS1	WDTPS0	WDTEN	---1 1111
300005h	CONFIG3H	MCLRE	—	—	—	HFOFST	LPT1OSC	PBADEN	CCP2MX	1--- 1011
300006h	CONFIG4L	$\overline{\text{DEBUG}}$	XINST	—	—	—	LVP	—	STVREN	10-- -1-1
300008h	CONFIG5L	—	—	—	—	CP3(1)	CP2(1)	CP1	CP0	---- 1111
300009h	CONFIG5H	CPD	CPB	—	—	—	—	—	—	11-- ----
30000Ah	CONFIG6L	—	—	—	—	WRT3(1)	WRT2(1)	WRT1	WRT0	---- 1111
30000Bh	CONFIG6H	WRTD	WRTB	WRTC	—	—	—	—	—	111- ----
30000Ch	CONFIG7L	—	—	—	—	EBTR3(1)	EBTR2(1)	EBTR1	EBTR0	---- 1111
30000Dh	CONFIG7H	—	EBTRB	—	—	—	—	—	—	-1-- ----
3FFFFEh	DEVID1(2)	DEV2	DEV1	DEV0	REV4	REV3	REV2	REV1	REV0	qqqq qqqq(2)
3FFFFFh	DEVID2(2)	DEV10	DEV9	DEV8	DEV7	DEV6	DEV5	DEV4	DEV3	0000 1100

Legend: x = unknown, u = unchanged, – = unimplemented, q = value depends on condition.
Shaded cells are unimplemented, read as '0'.

Note 1: Implemented but not used in PIC18FX3K20 and PIC18FX4K20 devices; maintain this bit set.

2: See Register 23-12 for DEVID1 values. DEVID registers are read-only and cannot be programmed by the user.

© 2010 Microchip Technology Inc.

REGISTER 23-1: CONFIG1H: CONFIGURATION REGISTER 1 HIGH

R/P-0	R/P-0	U-0	U-0	R/P-0	R/P-1	R/P-1	R/P-1
IESO	FCMEN	—	—	FOSC3	FOSC2	FOSC1	FOSC0
bit 7							bit 0

Legend:		
R = Readable bit	P = Programmable bit	U = Unimplemented bit, read as '0'
-n = Value when device is unprogrammed		x = Bit is unknown

bit 7 **IESO:** Internal/External Oscillator Switchover bit
1 = Oscillator Switchover mode enabled
0 = Oscillator Switchover mode disabled

bit 6 **FCMEN:** Fail-Safe Clock Monitor Enable bit
1 = Fail-Safe Clock Monitor enabled
0 = Fail-Safe Clock Monitor disabled

bit 5-4 **Unimplemented:** Read as '0'

bit 3-0 **FOSC<3:0>:** Oscillator Selection bits
11xx = External RC oscillator, CLKOUT function on RA6
101x = External RC oscillator, CLKOUT function on RA6
1001 = Internal oscillator block, CLKOUT function on RA6, port function on RA7
1000 = Internal oscillator block, port function on RA6 and RA7
0111 = External RC oscillator, port function on RA6
0110 = HS oscillator, PLL enabled (Clock Frequency = 4 x FOSC1)
0101 = EC oscillator, port function on RA6
0100 = EC oscillator, CLKOUT function on RA6
0011 = External RC oscillator, CLKOUT function on RA6
0010 = HS oscillator
0001 = XT oscillator
0000 = LP oscillator

REGISTER 23-2: CONFIG2L: CONFIGURATION REGISTER 2 LOW

U-0	U-0	U-0	R/P-1	R/P-1	R/P-1	R/P-1	R/P-1
—	—	—	BORV1(1)	BORV0(1)	BOREN1(2)	BOREN0(2)	$\overline{\text{PWRTEN}}$(2)
bit 7							bit 0

Legend:		
R = Readable bit	P = Programmable bit	U = Unimplemented bit, read as ‘0’
-n = Value when device is unprogrammed		x = Bit is unknown

bit 7-5 **Unimplemented:** Read as ‘0’

bit 4-3 **BORV<1:0>:** Brown-out Reset Voltage bits(1)
11 = VBOR set to 1.8V nominal
10 = VBOR set to 2.2V nominal
01 = VBOR set to 2.7V nominal
00 = VBOR set to 3.0V nominal

bit 2-1 **BOREN<1:0>:** Brown-out Reset Enable bits(2)
11 = Brown-out Reset enabled in hardware only (SBOREN is disabled)
10 = Brown-out Reset enabled in hardware only and disabled in Sleep mode (SBOREN is disabled)
01 = Brown-out Reset enabled and controlled by software (SBOREN is enabled)
00 = Brown-out Reset disabled in hardware and software

bit 0 **$\overline{\text{PWRTEN}}$:** Power-up Timer Enable bit(2)
1 = PWRT disabled
0 = PWRT enabled

Note 1: See **Section 26.1 “DC Characteristics: Supply Voltage”** for specifications.
2: The Power-up Timer is decoupled from Brown-out Reset, allowing these features to be independently controlled.

REGISTER 23-3: CONFIG2H: CONFIGURATION REGISTER 2 HIGH

U-0	U-0	U-0	R/P-1	R/P-1	R/P-1	R/P-1	R/P-1
—	—	—	WDTPS3	WDTPS2	WDTPS1	WDTPS0	WDTEN
bit 7							bit 0

Legend:		
R = Readable bit	P = Programmable bit	U = Unimplemented bit, read as ‘0’
-n = Value when device is unprogrammed		x = Bit is unknown

bit 7-5 **Unimplemented:** Read as ‘0’

bit 4-1 **WDTPS<3:0>:** Watchdog Timer Postscale Select bits
1111 = 1:32,768
1110 = 1:16,384
1101 = 1:8,192
1100 = 1:4,096
1011 = 1:2,048
1010 = 1:1,024
1001 = 1:512
1000 = 1:256
0111 = 1:128
0110 = 1:64
0101 = 1:32
0100 = 1:16
0011 = 1:8
0010 = 1:4
0001 = 1:2
0000 = 1:1

bit 0 **WDTEN:** Watchdog Timer Enable bit
1 = WDT is always enabled. SWDTEN bit has no effect
0 = WDT is controlled by SWDTEN bit of the WDTCON register

© 2010 Microchip Technology Inc.

REGISTER 23-4: CONFIG3H: CONFIGURATION REGISTER 3 HIGH

R/P-1	U-0	U-0	U-0	R/P-1	R/P-0	R/P-1	R/P-1
MCLRE	—	—	—	HFOFST	LPT1OSC	PBADEN	CCP2MX
bit 7							bit 0

Legend:		
R = Readable bit	P = Programmable bit	U = Unimplemented bit, read as ‘0’
-n = Value when device is unprogrammed		x = Bit is unknown

bit 7 **MCLRE:** $\overline{\text{MCLR}}$ Pin Enable bit
1 = $\overline{\text{MCLR}}$ pin enabled; RE3 input pin disabled
0 = RE3 input pin enabled; $\overline{\text{MCLR}}$ disabled

bit 6-4 **Unimplemented:** Read as ‘0’

bit 3 **HFOFST:** HFINTOSC Fast Start-up
1 = HFINTOSC starts clocking the CPU without waiting for the oscillator to stabilize.
0 = The system clock is held off until the HFINTOSC is stable.

bit 2 **LPT1OSC:** Low-Power Timer1 Oscillator Enable bit
1 = Timer1 configured for low-power operation
0 = Timer1 configured for higher power operation

bit 1 **PBADEN:** PORTB A/D Enable bit
(Affects ANSELH Reset state. ANSELH controls PORTB<4:0> pin configuration.)
1 = PORTB<4:0> pins are configured as analog input channels on Reset
0 = PORTB<4:0> pins are configured as digital I/O on Reset

bit 0 **CCP2MX:** CCP2 MUX bit
1 = CCP2 input/output is multiplexed with RC1
0 = CCP2 input/output is multiplexed with RB3

REGISTER 23-5: CONFIG4L: CONFIGURATION REGISTER 4 LOW

R/P-1	R/P-0	U-0	U-0	U-0	R/P-1	U-0	R/P-1
$\overline{\text{DEBUG}}$	XINST	—	—	—	LVP(1)	—	STVREN
bit 7							bit 0

Legend:		
R = Readable bit	P = Programmable bit	U = Unimplemented bit, read as ‘0’
-n = Value when device is unprogrammed		x = Bit is unknown

bit 7 $\overline{\textbf{DEBUG}}$**:** Background Debugger Enable bit
1 = Background debugger disabled, RB6 and RB7 configured as general purpose I/O pins
0 = Background debugger enabled, RB6 and RB7 are dedicated to In-Circuit Debug

bit 6 **XINST:** Extended Instruction Set Enable bit
1 = Instruction set extension and Indexed Addressing mode enabled
0 = Instruction set extension and Indexed Addressing mode disabled (Legacy mode)

bit 5-3 **Unimplemented:** Read as ‘0’

bit 2 **LVP:** Single-Supply ICSP Enable bit
1 = Single-Supply ICSP enabled
0 = Single-Supply ICSP disabled

bit 1 **Unimplemented:** Read as ‘0’

bit 0 **STVREN:** Stack Full/Underflow Reset Enable bit
1 = Stack full/underflow will cause Reset
0 = Stack full/underflow will not cause Reset

Note 1: Can only be changed by a programmer in high-voltage programming mode.

REGISTER 23-6: CONFIG5L: CONFIGURATION REGISTER 5 LOW

U-0	U-0	U-0	U-0	R/C-1	R/C-1	R/C-1	R/C-1
—	—	—	—	CP3(1)	CP2(1)	CP1	CP0
bit 7							bit 0

Legend:	
R = Readable bit	U = Unimplemented bit, read as '0'
-n = Value when device is unprogrammed	C = Clearable only bit

bit 7-4 **Unimplemented:** Read as '0'

bit 3 **CP3:** Code Protection bit(1)
1 = Block 3 not code-protected
0 = Block 3 code-protected

bit 2 **CP2:** Code Protection bit(1)
1 = Block 2 not code-protected
0 = Block 2 code-protected

bit 1 **CP1:** Code Protection bit
1 = Block 1 not code-protected
0 = Block 1 code-protected

bit 0 **CP0:** Code Protection bit
1 = Block 0 not code-protected
0 = Block 0 code-protected

Note 1: Implemented, but not used in PIC18FX3K20 and PIC18FX4K20 devices.

REGISTER 23-7: CONFIG5H: CONFIGURATION REGISTER 5 HIGH

R/C-1	R/C-1	U-0	U-0	U-0	U-0	U-0	U-0
CPD	CPB	—	—	—	—	—	—
bit 7							bit 0

Legend:	
R = Readable bit	U = Unimplemented bit, read as '0'
-n = Value when device is unprogrammed	C = Clearable only bit

bit 7 **CPD:** Data EEPROM Code Protection bit
1 = Data EEPROM not code-protected
0 = Data EEPROM code-protected

bit 6 **CPB:** Boot Block Code Protection bit
1 = Boot Block not code-protected
0 = Boot Block code-protected

bit 5-0 **Unimplemented:** Read as '0'

© 2010 Microchip Technology Inc.

REGISTER 23-8: CONFIG6L: CONFIGURATION REGISTER 6 LOW

U-0	U-0	U-0	U-0	R/C-1	R/C-1	R/C-1	R/C-1
—	—	—	—	WRT3(1)	WRT2(1)	WRT1	WRT0
bit 7							bit 0

Legend:	
R = Readable bit	U = Unimplemented bit, read as '0'
-n = Value when device is unprogrammed	C = Clearable only bit

bit 7-4 **Unimplemented:** Read as '0'

bit 3 **WRT3:** Write Protection bit(1)
1 = Block 3 not write-protected
0 = Block 3 write-protected

bit 2 **WRT2:** Write Protection bit(1)
1 = Block 2 not write-protected
0 = Block 2 write-protected

bit 1 **WRT1:** Write Protection bit
1 = Block 1 not write-protected
0 = Block 1 write-protected

bit 0 **WRT0:** Write Protection bit
1 = Block 0 not write-protected
0 = Block 0 write-protected

Note 1: Implemented, but not used in PIC18FX3K20 and PIC18FX4K20 devices.

REGISTER 23-9: CONFIG6H: CONFIGURATION REGISTER 6 HIGH

R/C-1	R/C-1	R-1	U-0	U-0	U-0	U-0	U-0
WRTD	WRTB	WRTC(1)	—	—	—	—	—
bit 7							bit 0

Legend:	
R = Readable bit	U = Unimplemented bit, read as '0'
-n = Value when device is unprogrammed	C = Clearable only bit

bit 7 **WRTD:** Data EEPROM Write Protection bit
1 = Data EEPROM not write-protected
0 = Data EEPROM write-protected

bit 6 **WRTB:** Boot Block Write Protection bit
1 = Boot Block not write-protected
0 = Boot Block write-protected

bit 5 **WRTC:** Configuration Register Write Protection bit(1)
1 = Configuration registers not write-protected
0 = Configuration registers write-protected

bit 4-0 **Unimplemented:** Read as '0'

Note 1: This bit is read-only in normal execution mode; it can be written only in Program mode.

REGISTER 23-10: CONFIG7L: CONFIGURATION REGISTER 7 LOW

U-0	U-0	U-0	U-0	R/C-1	R/C-1	R/C-1	R/C-1
—	—	—	—	EBTR3(1)	EBTR2(1)	EBTR1	EBTR0
bit 7							bit 0

Legend:	
R = Readable bit	U = Unimplemented bit, read as '0'
-n = Value when device is unprogrammed	C = Clearable only bit

bit 7-4 **Unimplemented:** Read as '0'

bit 3 **EBTR3:** Table Read Protection bit(1)
1 = Block 3 not protected from table reads executed in other blocks
0 = Block 3 protected from table reads executed in other blocks

bit 2 **EBTR2**: Table Read Protection bit(1)
1 = Block 2 not protected from table reads executed in other blocks
0 = Block 2 protected from table reads executed in other blocks

bit 1 **EBTR1:** Table Read Protection bit
1 = Block 1 not protected from table reads executed in other blocks
0 = Block 1 protected from table reads executed in other blocks

bit 0 **EBTR0:** Table Read Protection bit
1 = Block 0 not protected from table reads executed in other blocks
0 = Block 0 protected from table reads executed in other blocks

Note 1: Implemented, but not used in PIC18FX3K20 and PIC18FX4K20 devices.

REGISTER 23-11: CONFIG7H: CONFIGURATION REGISTER 7 HIGH

U-0	R/C-1	U-0	U-0	U-0	U-0	U-0	U-0
—	EBTRB	—	—	—	—	—	—
bit 7							bit 0

Legend:	
R = Readable bit	U = Unimplemented bit, read as '0'
-n = Value when device is unprogrammed	C = Clearable only bit

bit 7 **Unimplemented:** Read as '0'

bit 6 **EBTRB:** Boot Block Table Read Protection bit
1 = Boot Block not protected from table reads executed in other blocks
0 = Boot Block protected from table reads executed in other blocks

bit 5-0 **Unimplemented:** Read as '0'

© 2010 Microchip Technology Inc.

REGISTER 23-12: DEVID1: DEVICE ID REGISTER 1 FOR PIC18F2XK20/4XK20

R	R	R	R	R	R	R	R
DEV2	DEV1	DEV0	REV4	REV3	REV2	REV1	REV0
bit 7							bit 0

Legend:	
R = Readable bit	U = Unimplemented bit, read as ‘0’
-n = Value when device is unprogrammed	C = Clearable only bit

bit 7-5 **DEV<2:0>:** Device ID bits
000 = PIC18F46K20
001 = PIC18F26K20
010 = PIC18F45K20
011 = PIC18F25K20
100 = PIC18F44K20
101 = PIC18F24K20
110 = PIC18F43K20
111 = PIC18F23K20

bit 4-0 **REV<4:0>:** Revision ID bits
These bits are used to indicate the device revision.

REGISTER 23-13: DEVID2: DEVICE ID REGISTER 2 FOR PIC18F2XK20/4XK20

R	R	R	R	R	R	R	R
DEV10	DEV9	DEV8	DEV7	DEV6	DEV5	DEV4	DEV3
bit 7							bit 0

Legend:	
R = Readable bit	U = Unimplemented bit, read as ‘0’
-n = Value when device is unprogrammed	C = Clearable only bit

bit 7-0 **DEV<10:3>:** Device ID bits
These bits are used with the DEV<2:0> bits in the Device ID Register 1 to identify the part number.
0010 0000 = PIC18F2XK20/4XK20 devices

Note 1: These values for DEV<10:3> may be shared with other devices. The specific device is always identified by using the entire DEV<10:0> bit sequence.

23.2 Watchdog Timer (WDT)

For PIC18F2XK20/4XK20 devices, the WDT is driven by the LFINTOSC source. When the WDT is enabled, the clock source is also enabled. The nominal WDT period is 4 ms and has the same stability as the LFINTOSC oscillator.

The 4 ms period of the WDT is multiplied by a 16-bit postscaler. Any output of the WDT postscaler is selected by a multiplexer, controlled by bits in Configuration Register 2H. Available periods range from 4 ms to 131.072 seconds (2.18 minutes). The WDT and postscaler are cleared when any of the following events occur: a SLEEP or CLRWDT instruction is executed, the IRCF bits of the OSCCON register are changed or a clock failure has occurred.

Note 1:	The CLRWDT and SLEEP instructions clear the WDT and postscaler counts when executed.
2:	Changing the setting of the IRCF bits of the OSCCON register clears the WDT and postscaler counts.
3:	When a CLRWDT instruction is executed, the postscaler count will be cleared.

FIGURE 23-1: WDT BLOCK DIAGRAM

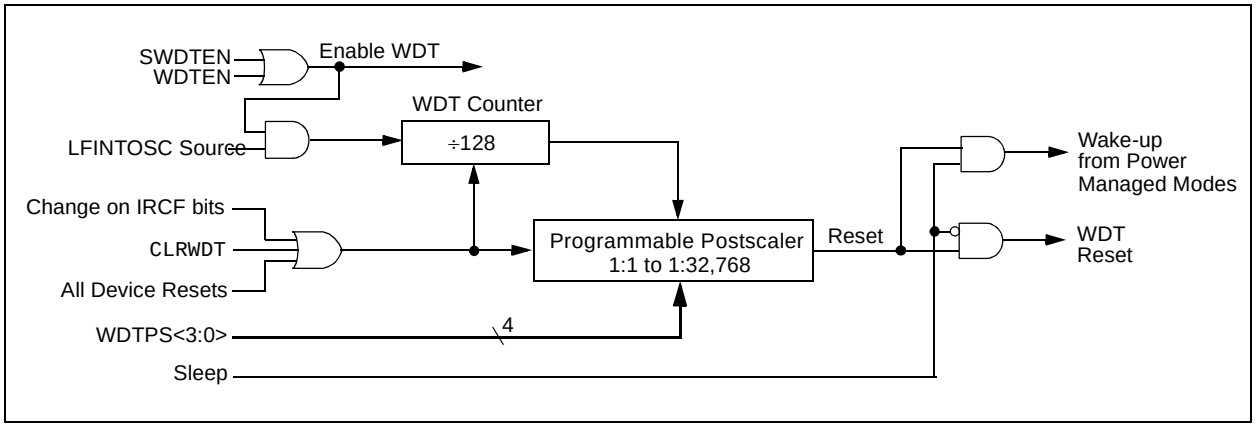

© 2010 Microchip Technology Inc.

23.2.1 CONTROL REGISTER

Register 23-14 shows the WDTCON register. This is a readable and writable register which contains a control bit that allows software to override the WDT enable Configuration bit, but only if the Configuration bit has disabled the WDT.

REGISTER 23-14: WDTCON: WATCHDOG TIMER CONTROL REGISTER

U-0	U-0	U-0	U-0	U-0	U-0	U-0	R/W-0
—	—	—	—	—	—	—	SWDTEN(1)
bit 7							bit 0

Legend:			
R = Readable bit	W = Writable bit	U = Unimplemented bit, read as '0'	
-n = Value at POR	'1' = Bit is set	'0' = Bit is cleared	x = Bit is unknown

bit 7-1 **Unimplemented:** Read as '0'

bit 0 **SWDTEN:** Software Enable or Disable the Watchdog Timer bit(1)
1 = WDT is turned on
0 = WDT is turned off (Reset value)

Note 1: This bit has no effect if the Configuration bit, WDTEN, is enabled.

TABLE 23-2: SUMMARY OF WATCHDOG TIMER REGISTERS

Name	Bit 7	Bit 6	Bit 5	Bit 4	Bit 3	Bit 2	Bit 1	Bit 0	Reset Values on page
RCON	IPEN	SBOREN	—	$\overline{RI}$	$\overline{TO}$	$\overline{PD}$	$\overline{POR}$	$\overline{BOR}$	58
WDTCON	—	—	—	—	—	—	—	SWDTEN	60
CONFIG2H				WDTPS3	WDTPS2	WDTPS1	WDTPS0	WDTEN	302

Legend: — = unimplemented, read as '0'. Shaded cells are not used by the Watchdog Timer.

23.3 Program Verification and Code Protection

The overall structure of the code protection on the PIC18 Flash devices differs significantly from other PIC® microcontroller devices.

The user program memory is divided into three or five blocks, depending on the device. One of these is a Boot Block of 0.5K or 2K bytes, depending on the device. The remainder of the memory is divided into individual blocks on binary boundaries.

Each of the blocks has three code protection bits associated with them. They are:

- Code-Protect bit (CPn)
- Write-Protect bit (WRTn)
- External Block Table Read bit (EBTRn)

Figure 23-2 shows the program memory organization for 8, 16 and 32-Kbyte devices and the specific code protection bit associated with each block. The actual locations of the bits are summarized in Table 23-3.

FIGURE 23-2: CODE-PROTECTED PROGRAM MEMORY FOR PIC18F2XK20/4XK20

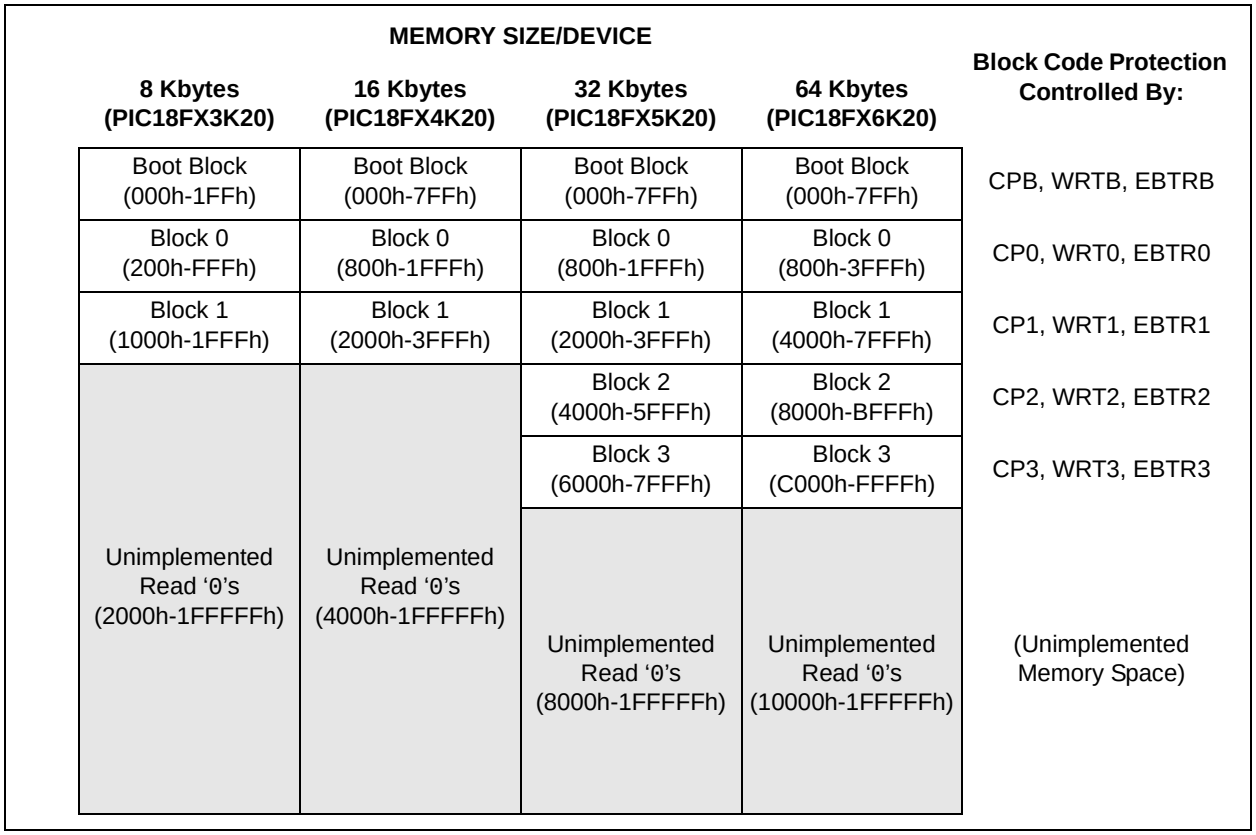

TABLE 23-3: SUMMARY OF CODE PROTECTION REGISTERS

File Name		Bit 7	Bit 6	Bit 5	Bit 4	Bit 3	Bit 2	Bit 1	Bit 0
300008h	CONFIG5L	—	—	—	—	CP3(1)	CP2(1)	CP1	CP0
300009h	CONFIG5H	CPD	CPB	—	—	—	—	—	—
30000Ah	CONFIG6L	—	—	—	—	WRT3(1)	WRT2(1)	WRT1	WRT0
30000Bh	CONFIG6H	WRTD	WRTB	WRTC	—	—	—	—	—
30000Ch	CONFIG7L	—	—	—	—	EBTR3(1)	EBTR2(1)	EBTR1	EBTR0
30000Dh	CONFIG7H	—	EBTRB	—	—	—	—	—	—

Legend: Shaded cells are unimplemented.

Note 1: Implemented, but not used in PIC18FX3K20 and PIC18FX4K20 devices.

© 2010 Microchip Technology Inc.

23.3.1 PROGRAM MEMORY CODE PROTECTION

The program memory may be read to or written from any location using the table read and table write instructions. The device ID may be read with table reads. The Configuration registers may be read and written with the table read and table write instructions.

In normal execution mode, the CPn bits have no direct effect. CPn bits inhibit external reads and writes. A block of user memory may be protected from table writes if the WRTn Configuration bit is '0'. The EBTRn bits control table reads. For a block of user memory with the EBTRn bit cleared to '0', a table READ instruction that executes from within that block is allowed to read. A table read instruction that executes from a location outside of that block is not allowed to read and will result in reading '0's. Figures 23-3 through 23-5 illustrate table write and table read protection.

Note:	Code protection bits may only be written to a '0' from a '1' state. It is not possible to write a '1' to a bit in the '0' state. Code protection bits are only set to '1' by a full chip erase or block erase function. The full chip erase and block erase functions can only be initiated via ICSP or an external programmer.

FIGURE 23-3: TABLE WRITE (WRTn) DISALLOWED

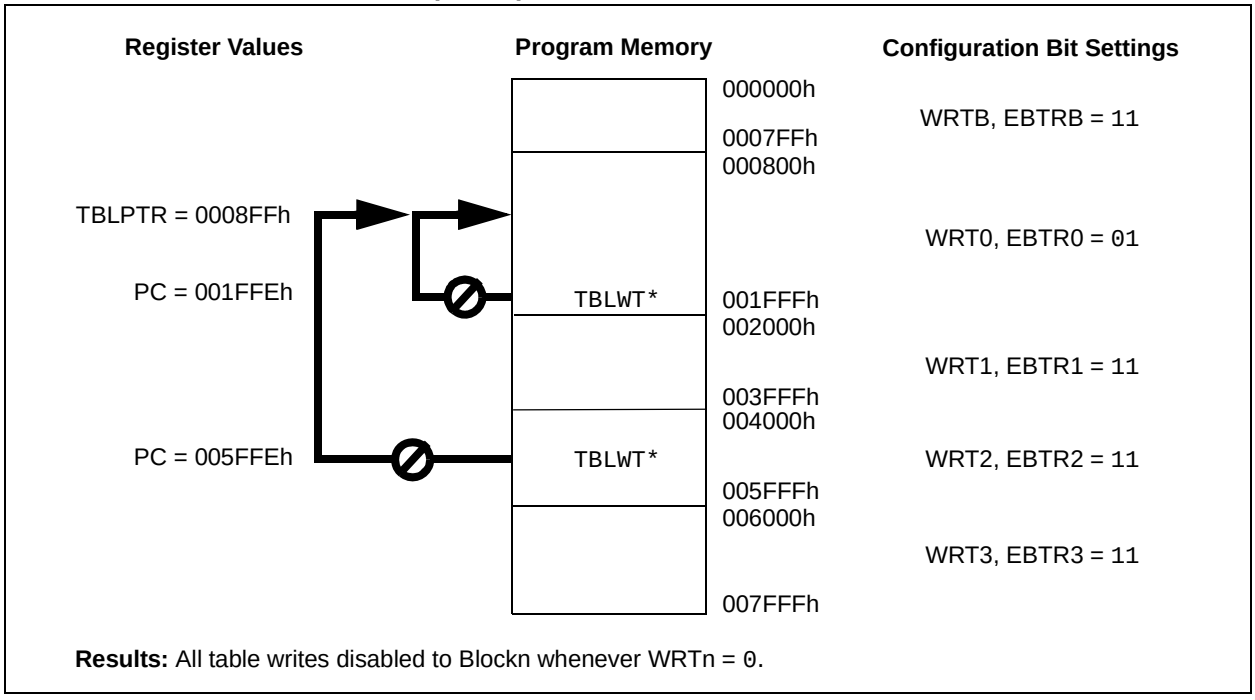

Results: All table writes disabled to Blockn whenever WRTn = 0.

FIGURE 23-4: EXTERNAL BLOCK TABLE READ (EBTRn) DISALLOWED

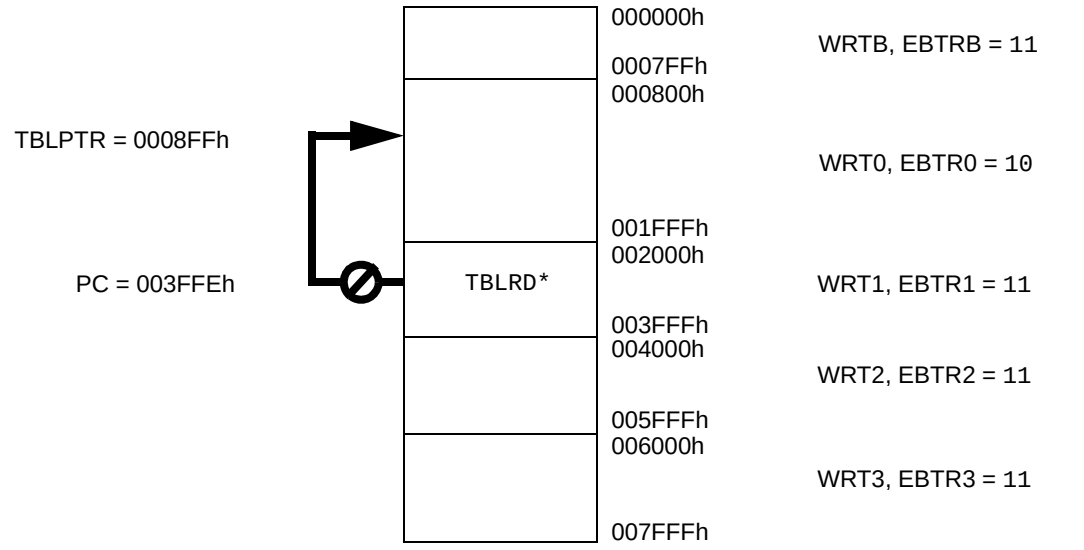

Results: All table reads from external blocks to Blockn are disabled whenever EBTRn = 0.
TABLAT register returns a value of '0'.

FIGURE 23-5: EXTERNAL BLOCK TABLE READ (EBTRn) ALLOWED

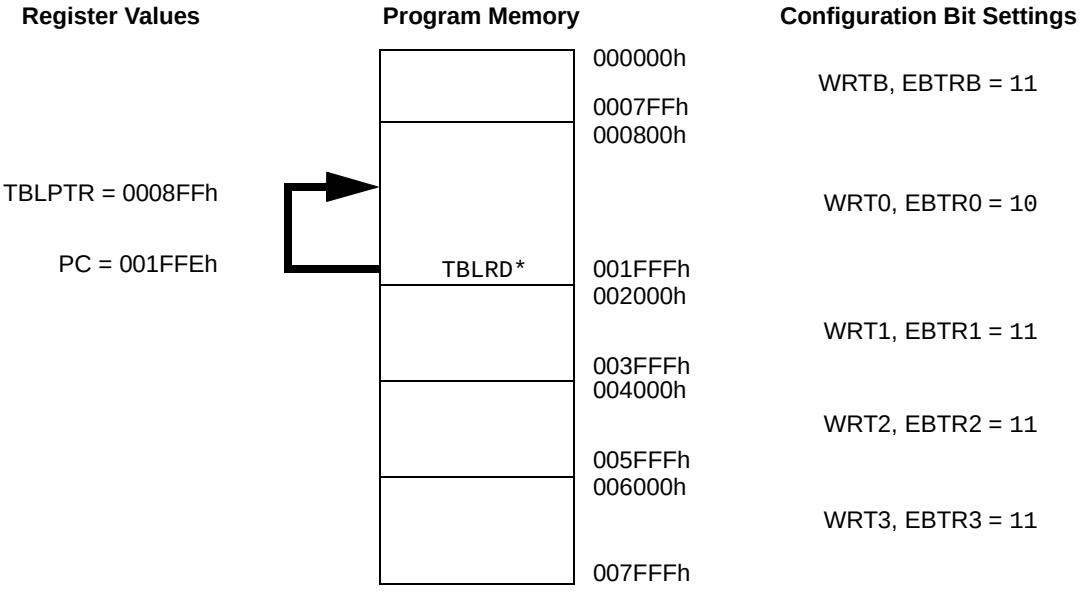

Results: Table reads permitted within Blockn, even when EBTRBn = 0.
TABLAT register returns the value of the data at the location TBLPTR.

© 2010 Microchip Technology Inc.

23.3.2 DATA EEPROM CODE PROTECTION

The entire data EEPROM is protected from external reads and writes by two bits: CPD and WRTD. CPD inhibits external reads and writes of data EEPROM. WRTD inhibits internal and external writes to data EEPROM. The CPU can always read data EEPROM under normal operation, regardless of the protection bit settings.

23.3.3 CONFIGURATION REGISTER PROTECTION

The Configuration registers can be write-protected. The WRTC bit controls protection of the Configuration registers. In normal execution mode, the WRTC bit is readable only. WRTC can only be written via ICSP or an external programmer.

23.4 ID Locations

Eight memory locations (200000h-200007h) are designated as ID locations, where the user can store checksum or other code identification numbers. These locations are both readable and writable during normal execution through the TBLRD and TBLWT instructions or during program/verify. The ID locations can be read when the device is code-protected.

23.5 In-Circuit Serial Programming

PIC18F2XK20/4XK20 devices can be serially programmed while in the end application circuit. This is simply done with two lines for clock and data and three other lines for power, ground and the programming voltage. This allows customers to manufacture boards with unprogrammed devices and then program the microcontroller just before shipping the product. This also allows the most recent firmware or a custom firmware to be programmed.

23.6 In-Circuit Debugger

When the DEBUG Configuration bit is programmed to a '0', the In-Circuit Debugger functionality is enabled. This function allows simple debugging functions when used with MPLAB® IDE. When the microcontroller has this feature enabled, some resources are not available for general use. Table 23-4 shows which resources are required by the background debugger.

TABLE 23-4: DEBUGGER RESOURCES

I/O pins:	RB6, RB7
Stack:	2 levels
Program Memory:	512 bytes
Data Memory:	10 bytes

To use the In-Circuit Debugger function of the microcontroller, the design must implement In-Circuit Serial Programming connections to the following pins:

- $\overline{MCLR}$/VPP/RE3
- VDD
- VSS
- RB7
- RB6

This will interface to the In-Circuit Debugger module available from Microchip or one of the third party development tool companies.

23.7 Single-Supply ICSP Programming

The LVP Configuration bit enables Single-Supply ICSP Programming (formerly known as Low-Voltage ICSP Programming or LVP). When Single-Supply Programming is enabled, the microcontroller can be programmed without requiring high voltage being applied to the $\overline{MCLR}$/VPP/RE3 pin, but the RB5/KBI1/PGM pin is then dedicated to controlling Program mode entry and is not available as a general purpose I/O pin.

While programming, using Single-Supply Programming mode, VDD is applied to the $\overline{MCLR}$/VPP/RE3 pin as in normal execution mode. To enter Programming mode, VDD is applied to the PGM pin.

Note 1: High-voltage programming is always available, regardless of the state of the LVP bit or the PGM pin, by applying VIHH to the $\overline{MCLR}$ pin.

2: By default, Single-Supply ICSP is enabled in unprogrammed devices (as supplied from Microchip) and erased devices.

3: When Single-Supply Programming is enabled, the RB5 pin can no longer be used as a general purpose I/O pin.

4: When LVP is enabled, externally pull the PGM pin to VSS to allow normal program execution.

If Single-Supply ICSP Programming mode will not be used, the LVP bit can be cleared. RB5/KBI1/PGM then becomes available as the digital I/O pin, RB5. The LVP bit may be set or cleared only when using standard high-voltage programming (VIHH applied to the $\overline{MCLR}$/VPP/RE3 pin). Once LVP has been disabled, only the standard high-voltage programming is available and must be used to program the device.

Memory that is not code-protected can be erased using either a block erase, or erased row by row, then written at any specified VDD. If code-protected memory is to be erased, a block erase is required.

NOTES:

© 2010 Microchip Technology Inc.

24.0 INSTRUCTION SET SUMMARY

PIC18F2XK20/4XK20 devices incorporate the standard set of 75 PIC18 core instructions, as well as an extended set of 8 new instructions, for the optimization of code that is recursive or that utilizes a software stack. The extended set is discussed later in this section.

24.1 Standard Instruction Set

The standard PIC18 instruction set adds many enhancements to the previous PIC® MCU instruction sets, while maintaining an easy migration from these PIC® MCU instruction sets. Most instructions are a single program memory word (16 bits), but there are four instructions that require two program memory locations.

Each single-word instruction is a 16-bit word divided into an opcode, which specifies the instruction type and one or more operands, which further specify the operation of the instruction.

The instruction set is highly orthogonal and is grouped into four basic categories:

- **Byte-oriented** operations
- **Bit-oriented** operations
- **Literal** operations
- **Control** operations

The PIC18 instruction set summary in Table 24-2 lists **byte-oriented**, **bit-oriented**, **literal** and **control** operations. Table 24-1 shows the opcode field descriptions.

Most **byte-oriented** instructions have three operands:

1. The file register (specified by ‘f’)
2. The destination of the result (specified by ‘d’)
3. The accessed memory (specified by ‘a’)

The file register designator ‘f’ specifies which file register is to be used by the instruction. The destination designator ‘d’ specifies where the result of the operation is to be placed. If ‘d’ is zero, the result is placed in the WREG register. If ‘d’ is one, the result is placed in the file register specified in the instruction.

All **bit-oriented** instructions have three operands:

1. The file register (specified by ‘f’)
2. The bit in the file register (specified by ‘b’)
3. The accessed memory (specified by ‘a’)

The bit field designator ‘b’ selects the number of the bit affected by the operation, while the file register designator ‘f’ represents the number of the file in which the bit is located.

The **literal** instructions may use some of the following operands:

- A literal value to be loaded into a file register (specified by ‘k’)
- The desired FSR register to load the literal value into (specified by ‘f’)
- No operand required (specified by ‘—’)

The **control** instructions may use some of the following operands:

- A program memory address (specified by ‘n’)
- The mode of the CALL or RETURN instructions (specified by ‘s’)
- The mode of the table read and table write instructions (specified by ‘m’)
- No operand required (specified by ‘—’)

All instructions are a single word, except for four double-word instructions. These instructions were made double-word to contain the required information in 32 bits. In the second word, the 4 MSbs are ‘1’s. If this second word is executed as an instruction (by itself), it will execute as a NOP.

All single-word instructions are executed in a single instruction cycle, unless a conditional test is true or the program counter is changed as a result of the instruction. In these cases, the execution takes two instruction cycles, with the additional instruction cycle(s) executed as a NOP.

The double-word instructions execute in two instruction cycles.

One instruction cycle consists of four oscillator periods. Thus, for an oscillator frequency of 4 MHz, the normal instruction execution time is 1 μs. If a conditional test is true, or the program counter is changed as a result of an instruction, the instruction execution time is 2 μs. Two-word branch instructions (if true) would take 3 μs.

Figure 24-1 shows the general formats that the instructions can have. All examples use the convention ‘nnh’ to represent a hexadecimal number.

The Instruction Set Summary, shown in Table 24-2, lists the standard instructions recognized by the Microchip Assembler (MPASM™).

Section 24.1.1 “Standard Instruction Set” provides a description of each instruction.

TABLE 24-1: OPCODE FIELD DESCRIPTIONS

Field	Description
a	RAM access bit a = 0: RAM location in Access RAM (BSR register is ignored) a = 1: RAM bank is specified by BSR register
bbb	Bit address within an 8-bit file register (0 to 7).
BSR	Bank Select Register. Used to select the current RAM bank.
C, DC, Z, OV, N	ALU Status bits: **C**arry, **D**igit **C**arry, **Z**ero, **Ov**erflow, **N**egative.
d	Destination select bit d = 0: store result in WREG d = 1: store result in file register f
dest	Destination: either the WREG register or the specified register file location.
f	8-bit Register file address (00h to FFh) or 2-bit FSR designator (0h to 3h).
f_s	12-bit Register file address (000h to FFFh). This is the source address.
f_d	12-bit Register file address (000h to FFFh). This is the destination address.
GIE	Global Interrupt Enable bit.
k	Literal field, constant data or label (may be either an 8-bit, 12-bit or a 20-bit value).
label	Label name.
mm * *+ *- +*	The mode of the TBLPTR register for the table read and table write instructions. Only used with table read and table write instructions: No change to register (such as TBLPTR with table reads and writes) Post-Increment register (such as TBLPTR with table reads and writes) Post-Decrement register (such as TBLPTR with table reads and writes) Pre-Increment register (such as TBLPTR with table reads and writes)
n	The relative address (2's complement number) for relative branch instructions or the direct address for CALL/BRANCH and RETURN instructions.
PC	Program Counter.
PCL	Program Counter Low Byte.
PCH	Program Counter High Byte.
PCLATH	Program Counter High Byte Latch.
PCLATU	Program Counter Upper Byte Latch.
$\overline{PD}$	Power-down bit.
PRODH	Product of Multiply High Byte.
PRODL	Product of Multiply Low Byte.
s	Fast Call/Return mode select bit s = 0: do not update into/from shadow registers s = 1: certain registers loaded into/from shadow registers (Fast mode)
TBLPTR	21-bit Table Pointer (points to a Program Memory location).
TABLAT	8-bit Table Latch.
$\overline{TO}$	Time-out bit.
TOS	Top-of-Stack.
u	Unused or unchanged.
WDT	Watchdog Timer.
WREG	Working register (accumulator).
x	Don't care ('0' or '1'). The assembler will generate code with x = 0. It is the recommended form of use for compatibility with all Microchip software tools.
z_s	7-bit offset value for indirect addressing of register files (source).
z_d	7-bit offset value for indirect addressing of register files (destination).
{ }	Optional argument.
[text]	Indicates an indexed address.
(text)	The contents of text.
[expr]<n>	Specifies bit n of the register indicated by the pointer expr.
→	Assigned to.
< >	Register bit field.
∈	In the set of.
italics	User defined term (font is Courier).

© 2010 Microchip Technology Inc.

FIGURE 24-1: GENERAL FORMAT FOR INSTRUCTIONS

Byte-oriented file register operations

Example Instruction

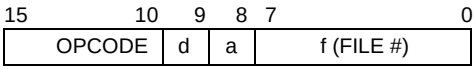

ADDWF MYREG, W, B

d = 0 for result destination to be WREG register
d = 1 for result destination to be file register (f)
a = 0 to force Access Bank
a = 1 for BSR to select bank
f = 8-bit file register address

Byte to Byte move operations (2-word)

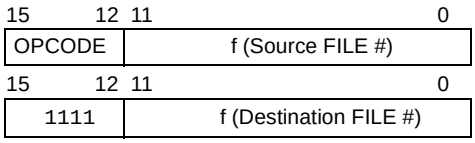

MOVFF MYREG1, MYREG2

f = 12-bit file register address

Bit-oriented file register operations

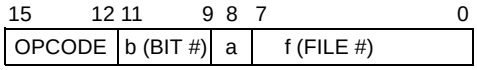

BSF MYREG, bit, B

b = 3-bit position of bit in file register (f)
a = 0 to force Access Bank
a = 1 for BSR to select bank
f = 8-bit file register address

Literal operations

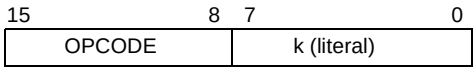

MOVLW 7Fh

k = 8-bit immediate value

Control operations

CALL, GOTO and Branch operations

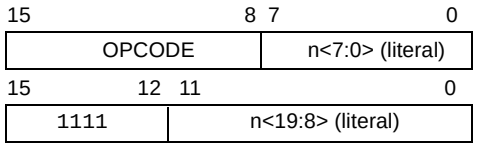

GOTO Label

n = 20-bit immediate value

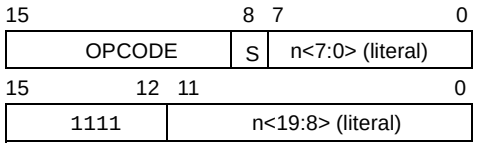

CALL MYFUNC

S = Fast bit

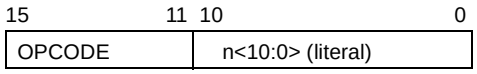

BRA MYFUNC

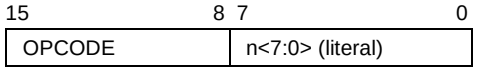

BC MYFUNC

TABLE 24-2: PIC18FXXXX INSTRUCTION SET

Mnemonic, Operands		Description	Cycles	16-Bit Instruction Word				Status Affected	Notes
				MSb			LSb		
BYTE-ORIENTED OPERATIONS									
ADDWF	f, d, a	Add WREG and f	1	0010	01da0	ffff	ffff	C, DC, Z, OV, N	1, 2
ADDWFC	f, d, a	Add WREG and CARRY bit to f	1	0010	0da	ffff	ffff	C, DC, Z, OV, N	1, 2
ANDWF	f, d, a	AND WREG with f	1	0001	01da	ffff	ffff	Z, N	1,2
CLRF	f, a	Clear f	1	0110	101a	ffff	ffff	Z	2
COMF	f, d, a	Complement f	1	0001	11da	ffff	ffff	Z, N	1, 2
CPFSEQ	f, a	Compare f with WREG, skip =	1 (2 or 3)	0110	001a	ffff	ffff	None	4
CPFSGT	f, a	Compare f with WREG, skip >	1 (2 or 3)	0110	010a	ffff	ffff	None	4
CPFSLT	f, a	Compare f with WREG, skip <	1 (2 or 3)	0110	000a	ffff	ffff	None	1, 2
DECF	f, d, a	Decrement f	1	0000	01da	ffff	ffff	C, DC, Z, OV, N	1, 2, 3, 4
DECFSZ	f, d, a	Decrement f, Skip if 0	1 (2 or 3)	0010	11da	ffff	ffff	None	1, 2, 3, 4
DCFSNZ	f, d, a	Decrement f, Skip if Not 0	1 (2 or 3)	0100	11da	ffff	ffff	None	1, 2
INCF	f, d, a	Increment f	1	0010	10da	ffff	ffff	C, DC, Z, OV, N	1, 2, 3, 4
INCFSZ	f, d, a	Increment f, Skip if 0	1 (2 or 3)	0011	11da	ffff	ffff	None	4
INFSNZ	f, d, a	Increment f, Skip if Not 0	1 (2 or 3)	0100	10da	ffff	ffff	None	1, 2
IORWF	f, d, a	Inclusive OR WREG with f	1	0001	00da	ffff	ffff	Z, N	1, 2
MOVF	f, d, a	Move f	1	0101	00da	ffff	ffff	Z, N	1
MOVFF	f_s, f_d	Move f_s (source) to 1st word f_d (destination) 2nd word	2	1100 1111	ffff ffff	ffff ffff	ffff ffff	None	
MOVWF	f, a	Move WREG to f	1	0110	111a	ffff	ffff	None	
MULWF	f, a	Multiply WREG with f	1	0000	001a	ffff	ffff	None	1, 2
NEGF	f, a	Negate f	1	0110	110a	ffff	ffff	C, DC, Z, OV, N	
RLCF	f, d, a	Rotate Left f through Carry	1	0011	01da	ffff	ffff	C, Z, N	1, 2
RLNCF	f, d, a	Rotate Left f (No Carry)	1	0100	01da	ffff	ffff	Z, N	
RRCF	f, d, a	Rotate Right f through Carry	1	0011	00da	ffff	ffff	C, Z, N	
RRNCF	f, d, a	Rotate Right f (No Carry)	1	0100	00da	ffff	ffff	Z, N	
SETF	f, a	Set f	1	0110	100a	ffff	ffff	None	1, 2
SUBFWB	f, d, a	Subtract f from WREG with borrow	1	0101	01da	ffff	ffff	C, DC, Z, OV, N	
SUBWF	f, d, a	Subtract WREG from f	1	0101	11da	ffff	ffff	C, DC, Z, OV, N	1, 2
SUBWFB	f, d, a	Subtract WREG from f with borrow	1	0101	10da	ffff	ffff	C, DC, Z, OV, N	
SWAPF	f, d, a	Swap nibbles in f	1	0011	10da	ffff	ffff	None	4
TSTFSZ	f, a	Test f, skip if 0	1 (2 or 3)	0110	011a	ffff	ffff	None	1, 2
XORWF	f, d, a	Exclusive OR WREG with f	1	0001	10da	ffff	ffff	Z, N	

Note 1: When a PORT register is modified as a function of itself (e.g., `MOVF PORTB, 1, 0`), the value used will be that value present on the pins themselves. For example, if the data latch is '1' for a pin configured as input and is driven low by an external device, the data will be written back with a '0'.

2: If this instruction is executed on the TMR0 register (and where applicable, 'd' = 1), the prescaler will be cleared if assigned.

3: If Program Counter (PC) is modified or a conditional test is true, the instruction requires two cycles. The second cycle is executed as a `NOP`.

4: Some instructions are two-word instructions. The second word of these instructions will be executed as a `NOP` unless the first word of the instruction retrieves the information embedded in these 16 bits. This ensures that all program memory locations have a valid instruction.

© 2010 Microchip Technology Inc.

TABLE 24-2: PIC18FXXXX INSTRUCTION SET (CONTINUED)

Mnemonic, Operands		Description	Cycles	16-Bit Instruction Word				Status Affected	Notes
				MSb			LSb		
BIT-ORIENTED OPERATIONS									
BCF	f, b, a	Bit Clear f	1	1001	bbba	ffff	ffff	None	1, 2
BSF	f, b, a	Bit Set f	1	1000	bbba	ffff	ffff	None	1, 2
BTFSC	f, b, a	Bit Test f, Skip if Clear	1 (2 or 3)	1011	bbba	ffff	ffff	None	3, 4
BTFSS	f, b, a	Bit Test f, Skip if Set	1 (2 or 3)	1010	bbba	ffff	ffff	None	3, 4
BTG	f, d, a	Bit Toggle f	1	0111	bbba	ffff	ffff	None	1, 2
CONTROL OPERATIONS									
BC	n	Branch if Carry	1 (2)	1110	0010	nnnn	nnnn	None	
BN	n	Branch if Negative	1 (2)	1110	0110	nnnn	nnnn	None	
BNC	n	Branch if Not Carry	1 (2)	1110	0011	nnnn	nnnn	None	
BNN	n	Branch if Not Negative	1 (2)	1110	0111	nnnn	nnnn	None	
BNOV	n	Branch if Not Overflow	1 (2)	1110	0101	nnnn	nnnn	None	
BNZ	n	Branch if Not Zero	1 (2)	1110	0001	nnnn	nnnn	None	
BOV	n	Branch if Overflow	1 (2)	1110	0100	nnnn	nnnn	None	
BRA	n	Branch Unconditionally	2	1101	0nnn	nnnn	nnnn	None	
BZ	n	Branch if Zero	1 (2)	1110	0000	nnnn	nnnn	None	
CALL	n, s	Call subroutine 1st word	2	1110	110s	kkkk	kkkk	None	
		2nd word		1111	kkkk	kkkk	kkkk		
CLRWDT	—	Clear Watchdog Timer	1	0000	0000	0000	0100	$\overline{TO}$, $\overline{PD}$	
DAW	—	Decimal Adjust WREG	1	0000	0000	0000	0111	C	
GOTO	n	Go to address 1st word	2	1110	1111	kkkk	kkkk	None	
		2nd word		1111	kkkk	kkkk	kkkk		
NOP	—	No Operation	1	0000	0000	0000	0000	None	
NOP	—	No Operation	1	1111	xxxx	xxxx	xxxx	None	4
POP	—	Pop top of return stack (TOS)	1	0000	0000	0000	0110	None	
PUSH	—	Push top of return stack (TOS)	1	0000	0000	0000	0101	None	
RCALL	n	Relative Call	2	1101	1nnn	nnnn	nnnn	None	
RESET		Software device Reset	1	0000	0000	1111	1111	All	
RETFIE	s	Return from interrupt enable	2	0000	0000	0001	000s	GIE/GIEH, PEIE/GIEL	
RETLW	k	Return with literal in WREG	2	0000	1100	kkkk	kkkk	None	
RETURN	s	Return from Subroutine	2	0000	0000	0001	001s	None	
SLEEP	—	Go into Standby mode	1	0000	0000	0000	0011	$\overline{TO}$, $\overline{PD}$	

Note 1: When a PORT register is modified as a function of itself (e.g., `MOVF PORTB, 1, 0`), the value used will be that value present on the pins themselves. For example, if the data latch is '1' for a pin configured as input and is driven low by an external device, the data will be written back with a '0'.

2: If this instruction is executed on the TMR0 register (and where applicable, 'd' = 1), the prescaler will be cleared if assigned.

3: If Program Counter (PC) is modified or a conditional test is true, the instruction requires two cycles. The second cycle is executed as a NOP.

4: Some instructions are two-word instructions. The second word of these instructions will be executed as a NOP unless the first word of the instruction retrieves the information embedded in these 16 bits. This ensures that all program memory locations have a valid instruction.

TABLE 24-2: PIC18FXXXX INSTRUCTION SET (CONTINUED)

Mnemonic, Operands		Description	Cycles	16-Bit Instruction Word MSb			LSb	Status Affected	Notes
LITERAL OPERATIONS									
ADDLW	k	Add literal and WREG	1	0000	1111	kkkk	kkkk	C, DC, Z, OV, N	
ANDLW	k	AND literal with WREG	1	0000	1011	kkkk	kkkk	Z, N	
IORLW	k	Inclusive OR literal with WREG	1	0000	1001	kkkk	kkkk	Z, N	
LFSR	f, k	Move literal (12-bit) 2nd word	2	1110	1110	00ff	kkkk	None	
		to FSR(f) 1st word		1111	0000	kkkk	kkkk		
MOVLB	k	Move literal to BSR<3:0>	1	0000	0001	0000	kkkk	None	
MOVLW	k	Move literal to WREG	1	0000	1110	kkkk	kkkk	None	
MULLW	k	Multiply literal with WREG	1	0000	1101	kkkk	kkkk	None	
RETLW	k	Return with literal in WREG	2	0000	1100	kkkk	kkkk	None	
SUBLW	k	Subtract WREG from literal	1	0000	1000	kkkk	kkkk	C, DC, Z, OV, N	
XORLW	k	Exclusive OR literal with WREG	1	0000	1010	kkkk	kkkk	Z, N	
DATA MEMORY ↔ PROGRAM MEMORY OPERATIONS									
TBLRD*		Table Read	2	0000	0000	0000	1000	None	
TBLRD*+		Table Read with post-increment		0000	0000	0000	1001	None	
TBLRD*-		Table Read with post-decrement		0000	0000	0000	1010	None	
TBLRD+*		Table Read with pre-increment		0000	0000	0000	1011	None	
TBLWT*		Table Write	2	0000	0000	0000	1100	None	
TBLWT*+		Table Write with post-increment		0000	0000	0000	1101	None	
TBLWT*-		Table Write with post-decrement		0000	0000	0000	1110	None	
TBLWT+*		Table Write with pre-increment		0000	0000	0000	1111	None	

Note 1: When a PORT register is modified as a function of itself (e.g., `MOVF PORTB, 1, 0`), the value used will be that value present on the pins themselves. For example, if the data latch is '1' for a pin configured as input and is driven low by an external device, the data will be written back with a '0'.

2: If this instruction is executed on the TMR0 register (and where applicable, 'd' = 1), the prescaler will be cleared if assigned.

3: If Program Counter (PC) is modified or a conditional test is true, the instruction requires two cycles. The second cycle is executed as a `NOP`.

4: Some instructions are two-word instructions. The second word of these instructions will be executed as a `NOP` unless the first word of the instruction retrieves the information embedded in these 16 bits. This ensures that all program memory locations have a valid instruction.

© 2010 Microchip Technology Inc.

24.1.1 STANDARD INSTRUCTION SET

ADDLW **ADD literal to W**

Syntax: ADDLW k

Operands: $0 \le k \le 255$

Operation: $(W) + k \rightarrow W$

Status Affected: N, OV, C, DC, Z

Encoding:

0000	1111	kkkk	kkkk

Description: The contents of W are added to the 8-bit literal 'k' and the result is placed in W.

Words: 1

Cycles: 1

Q Cycle Activity:

Q1	Q2	Q3	Q4
Decode	Read literal 'k'	Process Data	Write to W

Example: ADDLW 15h

Before Instruction
W = 10h
After Instruction
W = 25h

ADDWF **ADD W to f**

Syntax: ADDWF f {,d {,a}}

Operands: $0 \le f \le 255$
$d \in [0,1]$
$a \in [0,1]$

Operation: $(W) + (f) \rightarrow$ dest

Status Affected: N, OV, C, DC, Z

Encoding:

0010	01da	ffff	ffff

Description: Add W to register 'f'. If 'd' is '0', the result is stored in W. If 'd' is '1', the result is stored back in register 'f' (default).
If 'a' is '0', the Access Bank is selected. If 'a' is '1', the BSR is used to select the GPR bank.
If 'a' is '0' and the extended instruction set is enabled, this instruction operates in Indexed Literal Offset Addressing mode whenever $f \le 95$ (5Fh). See **Section 24.2.3 "Byte-Oriented and Bit-Oriented Instructions in Indexed Literal Offset Mode"** for details.

Words: 1

Cycles: 1

Q Cycle Activity:

Q1	Q2	Q3	Q4
Decode	Read register 'f'	Process Data	Write to destination

Example: ADDWF REG, 0, 0

Before Instruction
W = 17h
REG = 0C2h
After Instruction
W = 0D9h
REG = 0C2h

Note: All PIC18 instructions may take an optional label argument preceding the instruction mnemonic for use in symbolic addressing. If a label is used, the instruction format then becomes: {label} instruction argument(s).

ADDWFC **ADD W and CARRY bit to f**

Syntax: ADDWFC f {,d {,a}}

Operands: $0 \le f \le 255$
$d \in [0,1]$
$a \in [0,1]$

Operation: (W) + (f) + (C) → dest

Status Affected: N,OV, C, DC, Z

Encoding:

0010	00da	ffff	ffff

Description: Add W, the CARRY flag and data memory location 'f'. If 'd' is '0', the result is placed in W. If 'd' is '1', the result is placed in data memory location 'f'.
If 'a' is '0', the Access Bank is selected. If 'a' is '1', the BSR is used to select the GPR bank.
If 'a' is '0' and the extended instruction set is enabled, this instruction operates in Indexed Literal Offset Addressing mode whenever $f \le 95$ (5Fh). See **Section 24.2.3 "Byte-Oriented and Bit-Oriented Instructions in Indexed Literal Offset Mode"** for details.

Words: 1

Cycles: 1

Q Cycle Activity:

Q1	Q2	Q3	Q4
Decode	Read register 'f'	Process Data	Write to destination

Example: ADDWFC REG, 0, 1

Before Instruction
CARRY bit = 1
REG = 02h
W = 4Dh
After Instruction
CARRY bit = 0
REG = 02h
W = 50h

ANDLW **AND literal with W**

Syntax: ANDLW k

Operands: $0 \le k \le 255$

Operation: (W) .AND. k → W

Status Affected: N, Z

Encoding:

0000	1011	kkkk	kkkk

Description: The contents of W are AND'ed with the 8-bit literal 'k'. The result is placed in W.

Words: 1

Cycles: 1

Q Cycle Activity:

Q1	Q2	Q3	Q4
Decode	Read literal 'k'	Process Data	Write to W

Example: ANDLW 05Fh

Before Instruction
W = A3h
After Instruction
W = 03h

© 2010 Microchip Technology Inc.

ANDWF **AND W with f**

Syntax: ANDWF f {,d {,a}}

Operands: $0 \le f \le 255$
$d \in [0,1]$
$a \in [0,1]$

Operation: (W) .AND. (f) → dest

Status Affected: N, Z

Encoding:	0001	01da	ffff	ffff

Description: The contents of W are AND'ed with register 'f'. If 'd' is '0', the result is stored in W. If 'd' is '1', the result is stored back in register 'f' (default).
If 'a' is '0', the Access Bank is selected. If 'a' is '1', the BSR is used to select the GPR bank.
If 'a' is '0' and the extended instruction set is enabled, this instruction operates in Indexed Literal Offset Addressing mode whenever $f \le 95$ (5Fh). See **Section 24.2.3 "Byte-Oriented and Bit-Oriented Instructions in Indexed Literal Offset Mode"** for details.

Words: 1

Cycles: 1

Q Cycle Activity:

Q1	Q2	Q3	Q4
Decode	Read register 'f'	Process Data	Write to destination

Example: ANDWF REG, 0, 0

Before Instruction
W = 17h
REG = C2h
After Instruction
W = 02h
REG = C2h

BC **Branch if Carry**

Syntax: BC n

Operands: $-128 \le n \le 127$

Operation: if CARRY bit is '1'
(PC) + 2 + 2n → PC

Status Affected: None

Encoding:	1110	0010	nnnn	nnnn

Description: If the CARRY bit is '1', then the program will branch.
The 2's complement number '2n' is added to the PC. Since the PC will have incremented to fetch the next instruction, the new address will be PC + 2 + 2n. This instruction is then a two-cycle instruction.

Words: 1

Cycles: 1(2)

Q Cycle Activity:
If Jump:

Q1	Q2	Q3	Q4
Decode	Read literal 'n'	Process Data	Write to PC
No operation	No operation	No operation	No operation

If No Jump:

Q1	Q2	Q3	Q4
Decode	Read literal 'n'	Process Data	No operation

Example: HERE BC 5

Before Instruction
PC = address (HERE)
After Instruction
If CARRY = 1;
PC = address (HERE + 12)
If CARRY = 0;
PC = address (HERE + 2)

BCF **Bit Clear f**

Syntax: BCF f, b {,a}

Operands: $0 \le f \le 255$
$0 \le b \le 7$
$a \in [0,1]$

Operation: $0 \rightarrow f<b>$

Status Affected: None

Encoding:

1001	bbba	ffff	ffff

Description: Bit 'b' in register 'f' is cleared.
If 'a' is '0', the Access Bank is selected.
If 'a' is '1', the BSR is used to select the GPR bank.
If 'a' is '0' and the extended instruction set is enabled, this instruction operates in Indexed Literal Offset Addressing mode whenever $f \le 95$ (5Fh). See **Section 24.2.3 "Byte-Oriented and Bit-Oriented Instructions in Indexed Literal Offset Mode"** for details.

Words: 1

Cycles: 1

Q Cycle Activity:

Q1	Q2	Q3	Q4
Decode	Read register 'f'	Process Data	Write register 'f'

Example: BCF FLAG_REG, 7, 0

Before Instruction
FLAG_REG = C7h
After Instruction
FLAG_REG = 47h

BN **Branch if Negative**

Syntax: BN n

Operands: $-128 \le n \le 127$

Operation: if NEGATIVE bit is '1'
$(PC) + 2 + 2n \rightarrow PC$

Status Affected: None

Encoding:

1110	0110	nnnn	nnnn

Description: If the NEGATIVE bit is '1', then the program will branch.
The 2's complement number '2n' is added to the PC. Since the PC will have incremented to fetch the next instruction, the new address will be PC + 2 + 2n. This instruction is then a two-cycle instruction.

Words: 1

Cycles: 1(2)

Q Cycle Activity:
If Jump:

Q1	Q2	Q3	Q4
Decode	Read literal 'n'	Process Data	Write to PC
No operation	No operation	No operation	No operation

If No Jump:

Q1	Q2	Q3	Q4
Decode	Read literal 'n'	Process Data	No operation

Example:
```
HERE    BN   Jump
```
Before Instruction
PC = address (HERE)
After Instruction
If NEGATIVE = 1;
PC = address (Jump)
If NEGATIVE = 0;
PC = address (HERE + 2)

© 2010 Microchip Technology Inc.

BNC **Branch if Not Carry**

Syntax: BNC n

Operands: $-128 \le n \le 127$

Operation: if CARRY bit is '0'
(PC) + 2 + 2n → PC

Status Affected: None

Encoding:

1110	0011	nnnn	nnnn

Description: If the CARRY bit is '0', then the program will branch.
The 2's complement number '2n' is added to the PC. Since the PC will have incremented to fetch the next instruction, the new address will be PC + 2 + 2n. This instruction is then a two-cycle instruction.

Words: 1

Cycles: 1(2)

Q Cycle Activity:
If Jump:

Q1	Q2	Q3	Q4
Decode	Read literal 'n'	Process Data	Write to PC
No operation	No operation	No operation	No operation

If No Jump:

Q1	Q2	Q3	Q4
Decode	Read literal 'n'	Process Data	No operation

Example: HERE BNC Jump

Before Instruction
PC = address (HERE)
After Instruction
If CARRY = 0;
PC = address (Jump)
If CARRY = 1;
PC = address (HERE + 2)

BNN **Branch if Not Negative**

Syntax: BNN n

Operands: $-128 \le n \le 127$

Operation: if NEGATIVE bit is '0'
(PC) + 2 + 2n → PC

Status Affected: None

Encoding:

1110	0111	nnnn	nnnn

Description: If the NEGATIVE bit is '0', then the program will branch.
The 2's complement number '2n' is added to the PC. Since the PC will have incremented to fetch the next instruction, the new address will be PC + 2 + 2n. This instruction is then a two-cycle instruction.

Words: 1

Cycles: 1(2)

Q Cycle Activity:
If Jump:

Q1	Q2	Q3	Q4
Decode	Read literal 'n'	Process Data	Write to PC
No operation	No operation	No operation	No operation

If No Jump:

Q1	Q2	Q3	Q4
Decode	Read literal 'n'	Process Data	No operation

Example: HERE BNN Jump

Before Instruction
PC = address (HERE)
After Instruction
If NEGATIVE = 0;
PC = address (Jump)
If NEGATIVE = 1;
PC = address (HERE + 2)

BNOV **Branch if Not Overflow**

Syntax: BNOV n

Operands: -128 ≤ n ≤ 127

Operation: if OVERFLOW bit is '0'
(PC) + 2 + 2n → PC

Status Affected: None

Encoding:

1110	0101	nnnn	nnnn

Description: If the OVERFLOW bit is '0', then the program will branch.
The 2's complement number '2n' is added to the PC. Since the PC will have incremented to fetch the next instruction, the new address will be PC + 2 + 2n. This instruction is then a two-cycle instruction.

Words: 1

Cycles: 1(2)

Q Cycle Activity:
If Jump:

Q1	Q2	Q3	Q4
Decode	Read literal 'n'	Process Data	Write to PC
No operation	No operation	No operation	No operation

If No Jump:

Q1	Q2	Q3	Q4
Decode	Read literal 'n'	Process Data	No operation

Example: HERE BNOV Jump

Before Instruction
PC = address (HERE)
After Instruction
If OVERFLOW = 0;
PC = address (Jump)
If OVERFLOW = 1;
PC = address (HERE + 2)

BNZ **Branch if Not Zero**

Syntax: BNZ n

Operands: -128 ≤ n ≤ 127

Operation: if ZERO bit is '0'
(PC) + 2 + 2n → PC

Status Affected: None

Encoding:

1110	0001	nnnn	nnnn

Description: If the ZERO bit is '0', then the program will branch.
The 2's complement number '2n' is added to the PC. Since the PC will have incremented to fetch the next instruction, the new address will be PC + 2 + 2n. This instruction is then a two-cycle instruction.

Words: 1

Cycles: 1(2)

Q Cycle Activity:
If Jump:

Q1	Q2	Q3	Q4
Decode	Read literal 'n'	Process Data	Write to PC
No operation	No operation	No operation	No operation

If No Jump:

Q1	Q2	Q3	Q4
Decode	Read literal 'n'	Process Data	No operation

Example: HERE BNZ Jump

Before Instruction
PC = address (HERE)
After Instruction
If ZERO = 0;
PC = address (Jump)
If ZERO = 1;
PC = address (HERE + 2)

© 2010 Microchip Technology Inc.

BRA **Unconditional Branch**

Syntax: BRA n

Operands: $-1024 \leq n \leq 1023$

Operation: $(PC) + 2 + 2n \rightarrow PC$

Status Affected: None

Encoding:

1101	0nnn	nnnn	nnnn

Description: Add the 2's complement number '2n' to the PC. Since the PC will have incremented to fetch the next instruction, the new address will be PC + 2 + 2n. This instruction is a two-cycle instruction.

Words: 1

Cycles: 2

Q Cycle Activity:

Q1	Q2	Q3	Q4
Decode	Read literal 'n'	Process Data	Write to PC
No operation	No operation	No operation	No operation

Example: HERE BRA Jump

Before Instruction
PC = address (HERE)
After Instruction
PC = address (Jump)

BSF **Bit Set f**

Syntax: BSF f, b {,a}

Operands: $0 \leq f \leq 255$
$0 \leq b \leq 7$
$a \in [0,1]$

Operation: $1 \rightarrow f<b>$

Status Affected: None

Encoding:

1000	bbba	ffff	ffff

Description: Bit 'b' in register 'f' is set.
If 'a' is '0', the Access Bank is selected.
If 'a' is '1', the BSR is used to select the GPR bank.
If 'a' is '0' and the extended instruction set is enabled, this instruction operates in Indexed Literal Offset Addressing mode whenever $f \leq 95$ (5Fh). See **Section 24.2.3 "Byte-Oriented and Bit-Oriented Instructions in Indexed Literal Offset Mode"** for details.

Words: 1

Cycles: 1

Q Cycle Activity:

Q1	Q2	Q3	Q4
Decode	Read register 'f'	Process Data	Write register 'f'

Example: BSF FLAG_REG, 7, 1

Before Instruction
FLAG_REG = 0Ah
After Instruction
FLAG_REG = 8Ah

BTFSC **Bit Test File, Skip if Clear**

Syntax: BTFSC f, b {,a}

Operands: $0 \le f \le 255$
$0 \le b \le 7$
$a \in [0,1]$

Operation: skip if (f<b>) = 0

Status Affected: None

Encoding:

1011	bbba	ffff	ffff

Description: If bit 'b' in register 'f' is '0', then the next instruction is skipped. If bit 'b' is '0', then the next instruction fetched during the current instruction execution is discarded and a NOP is executed instead, making this a two-cycle instruction.
If 'a' is '0', the Access Bank is selected. If 'a' is '1', the BSR is used to select the GPR bank.
If 'a' is '0' and the extended instruction set is enabled, this instruction operates in Indexed Literal Offset Addressing mode whenever $f \le 95$ (5Fh).
See **Section 24.2.3 "Byte-Oriented and Bit-Oriented Instructions in Indexed Literal Offset Mode"** for details.

Words: 1

Cycles: 1(2)
Note: 3 cycles if skip and followed by a 2-word instruction.

Q Cycle Activity:

Q1	Q2	Q3	Q4
Decode	Read register 'f'	Process Data	No operation

If skip:

Q1	Q2	Q3	Q4
No operation	No operation	No operation	No operation

If skip and followed by 2-word instruction:

Q1	Q2	Q3	Q4
No operation	No operation	No operation	No operation
No operation	No operation	No operation	No operation

Example:
```
HERE    BTFSC   FLAG, 1, 0
FALSE   :
TRUE    :
```
Before Instruction
PC = address (HERE)
After Instruction
If FLAG<1> = 0;
PC = address (TRUE)
If FLAG<1> = 1;
PC = address (FALSE)

BTFSS **Bit Test File, Skip if Set**

Syntax: BTFSS f, b {,a}

Operands: $0 \le f \le 255$
$0 \le b < 7$
$a \in [0,1]$

Operation: skip if (f<b>) = 1

Status Affected: None

Encoding:

1010	bbba	ffff	ffff

Description: If bit 'b' in register 'f' is '1', then the next instruction is skipped. If bit 'b' is '1', then the next instruction fetched during the current instruction execution is discarded and a NOP is executed instead, making this a two-cycle instruction.
If 'a' is '0', the Access Bank is selected. If 'a' is '1', the BSR is used to select the GPR bank.
If 'a' is '0' and the extended instruction set is enabled, this instruction operates in Indexed Literal Offset Addressing mode whenever $f \le 95$ (5Fh).
See **Section 24.2.3 "Byte-Oriented and Bit-Oriented Instructions in Indexed Literal Offset Mode"** for details.

Words: 1

Cycles: 1(2)
Note: 3 cycles if skip and followed by a 2-word instruction.

Q Cycle Activity:

Q1	Q2	Q3	Q4
Decode	Read register 'f'	Process Data	No operation

If skip:

Q1	Q2	Q3	Q4
No operation	No operation	No operation	No operation

If skip and followed by 2-word instruction:

Q1	Q2	Q3	Q4
No operation	No operation	No operation	No operation
No operation	No operation	No operation	No operation

Example:
```
HERE    BTFSS   FLAG, 1, 0
FALSE   :
TRUE    :
```
Before Instruction
PC = address (HERE)
After Instruction
If FLAG<1> = 0;
PC = address (FALSE)
If FLAG<1> = 1;
PC = address (TRUE)

© 2010 Microchip Technology Inc.

BTG **Bit Toggle f**

Syntax: BTG f, b {,a}

Operands: $0 \le f \le 255$
$0 \le b < 7$
$a \in [0,1]$

Operation: $(\overline{f<b>}) \rightarrow f<b>$

Status Affected: None

Encoding:

0111	bbba	ffff	ffff

Description: Bit 'b' in data memory location 'f' is inverted.
If 'a' is '0', the Access Bank is selected.
If 'a' is '1', the BSR is used to select the GPR bank.
If 'a' is '0' and the extended instruction set is enabled, this instruction operates in Indexed Literal Offset Addressing mode whenever $f \le 95$ (5Fh). See **Section 24.2.3 "Byte-Oriented and Bit-Oriented Instructions in Indexed Literal Offset Mode"** for details.

Words: 1

Cycles: 1

Q Cycle Activity:

Q1	Q2	Q3	Q4
Decode	Read register 'f'	Process Data	Write register 'f'

Example: `BTG PORTC, 4, 0`

Before Instruction:
PORTC = 0111 0101 [75h]
After Instruction:
PORTC = 0110 0101 [65h]

BOV **Branch if Overflow**

Syntax: BOV n

Operands: $-128 \le n \le 127$

Operation: if OVERFLOW bit is '1'
$(PC) + 2 + 2n \rightarrow PC$

Status Affected: None

Encoding:

1110	0100	nnnn	nnnn

Description: If the OVERFLOW bit is '1', then the program will branch.
The 2's complement number '2n' is added to the PC. Since the PC will have incremented to fetch the next instruction, the new address will be PC + 2 + 2n. This instruction is then a two-cycle instruction.

Words: 1

Cycles: 1(2)

Q Cycle Activity:
If Jump:

Q1	Q2	Q3	Q4
Decode	Read literal 'n'	Process Data	Write to PC
No operation	No operation	No operation	No operation

If No Jump:

Q1	Q2	Q3	Q4
Decode	Read literal 'n'	Process Data	No operation

Example: `HERE BOV Jump`

Before Instruction
PC = address (HERE)
After Instruction
If OVERFLOW = 1;
PC = address (Jump)
If OVERFLOW = 0;
PC = address (HERE + 2)

BZ **Branch if Zero**

Syntax: BZ n

Operands: $-128 \le n \le 127$

Operation: if ZERO bit is '1'
(PC) + 2 + 2n → PC

Status Affected: None

Encoding:

1110	0000	nnnn	nnnn

Description: If the ZERO bit is '1', then the program will branch.
The 2's complement number '2n' is added to the PC. Since the PC will have incremented to fetch the next instruction, the new address will be PC + 2 + 2n. This instruction is then a two-cycle instruction.

Words: 1

Cycles: 1(2)

Q Cycle Activity:
If Jump:

Q1	Q2	Q3	Q4
Decode	Read literal 'n'	Process Data	Write to PC
No operation	No operation	No operation	No operation

If No Jump:

Q1	Q2	Q3	Q4
Decode	Read literal 'n'	Process Data	No operation

Example: HERE BZ Jump

Before Instruction
PC = address (HERE)
After Instruction
If ZERO = 1;
PC = address (Jump)
If ZERO = 0;
PC = address (HERE + 2)

CALL **Subroutine Call**

Syntax: CALL k {,s}

Operands: $0 \le k \le 1048575$
$s \in [0,1]$

Operation: (PC) + 4 → TOS,
k → PC<20:1>,
if s = 1
(W) → WS,
(Status) → STATUSS,
(BSR) → BSRS

Status Affected: None

Encoding:

1st word (k<7:0>)	1110	110s	$k_7$kkk	kkkk$_0$
2nd word(k<19:8>)	1111	k_{19}kkk	kkkk	kkkk$_8$

Description: Subroutine call of entire 2-Mbyte memory range. First, return address (PC + 4) is pushed onto the return stack. If 's' = 1, the W, Status and BSR registers are also pushed into their respective shadow registers, WS, STATUSS and BSRS. If 's' = 0, no update occurs (default). Then, the 20-bit value 'k' is loaded into PC<20:1>. CALL is a two-cycle instruction.

Words: 2

Cycles: 2

Q Cycle Activity:

Q1	Q2	Q3	Q4
Decode	Read literal 'k'<7:0>,	PUSH PC to stack	Read literal 'k'<19:8>, Write to PC
No operation	No operation	No operation	No operation

Example: HERE CALL THERE, 1

Before Instruction
PC = address (HERE)
After Instruction
PC = address (THERE)
TOS = address (HERE + 4)
WS = W
BSRS = BSR
STATUSS = Status

© 2010 Microchip Technology Inc.

CLRF **Clear f**

Syntax: CLRF f {,a}

Operands: $0 \le f \le 255$
$a \in [0,1]$

Operation: 000h → f
1 → Z

Status Affected: Z

Encoding:

0110	101a	ffff	ffff

Description: Clears the contents of the specified register.
If 'a' is '0', the Access Bank is selected.
If 'a' is '1', the BSR is used to select the GPR bank.
If 'a' is '0' and the extended instruction set is enabled, this instruction operates in Indexed Literal Offset Addressing mode whenever $f \le 95$ (5Fh). See **Section 24.2.3 "Byte-Oriented and Bit-Oriented Instructions in Indexed Literal Offset Mode"** for details.

Words: 1

Cycles: 1

Q Cycle Activity:

Q1	Q2	Q3	Q4
Decode	Read register 'f'	Process Data	Write register 'f'

Example: CLRF FLAG_REG, 1

Before Instruction
FLAG_REG = 5Ah
After Instruction
FLAG_REG = 00h

CLRWDT **Clear Watchdog Timer**

Syntax: CLRWDT

Operands: None

Operation: 000h → WDT,
000h → WDT postscaler,
1 → $\overline{TO}$,
1 → $\overline{PD}$

Status Affected: $\overline{TO}$, $\overline{PD}$

Encoding:

0000	0000	0000	0100

Description: CLRWDT instruction resets the Watchdog Timer. It also resets the postscaler of the WDT. Status bits, $\overline{TO}$ and $\overline{PD}$, are set.

Words: 1

Cycles: 1

Q Cycle Activity:

Q1	Q2	Q3	Q4
Decode	No operation	Process Data	No operation

Example: CLRWDT

Before Instruction
WDT Counter = ?
After Instruction
WDT Counter = 00h
WDT Postscaler = 0
$\overline{TO}$ = 1
$\overline{PD}$ = 1

COMF **Complement f**

Syntax: COMF f {,d {,a}}

Operands: $0 \le f \le 255$
$d \in [0,1]$
$a \in [0,1]$

Operation: $(\bar{f}) \rightarrow$ dest

Status Affected: N, Z

Encoding:

0001	11da	ffff	ffff

Description: The contents of register 'f' are complemented. If 'd' is '0', the result is stored in W. If 'd' is '1', the result is stored back in register 'f' (default).
If 'a' is '0', the Access Bank is selected. If 'a' is '1', the BSR is used to select the GPR bank.
If 'a' is '0' and the extended instruction set is enabled, this instruction operates in Indexed Literal Offset Addressing mode whenever $f \le 95$ (5Fh). See **Section 24.2.3 "Byte-Oriented and Bit-Oriented Instructions in Indexed Literal Offset Mode"** for details.

Words: 1

Cycles: 1

Q Cycle Activity:

Q1	Q2	Q3	Q4
Decode	Read register 'f'	Process Data	Write to destination

Example: `COMF REG, 0, 0`

Before Instruction
REG = 13h
After Instruction
REG = 13h
W = ECh

CPFSEQ **Compare f with W, skip if f = W**

Syntax: CPFSEQ f {,a}

Operands: $0 \le f \le 255$
$a \in [0,1]$

Operation: (f) – (W),
skip if (f) = (W)
(unsigned comparison)

Status Affected: None

Encoding:

0110	001a	ffff	ffff

Description: Compares the contents of data memory location 'f' to the contents of W by performing an unsigned subtraction.
If 'f' = W, then the fetched instruction is discarded and a NOP is executed instead, making this a two-cycle instruction.
If 'a' is '0', the Access Bank is selected. If 'a' is '1', the BSR is used to select the GPR bank.
If 'a' is '0' and the extended instruction set is enabled, this instruction operates in Indexed Literal Offset Addressing mode whenever $f \le 95$ (5Fh). See **Section 24.2.3 "Byte-Oriented and Bit-Oriented Instructions in Indexed Literal Offset Mode"** for details.

Words: 1

Cycles: 1(2)
Note: 3 cycles if skip and followed by a 2-word instruction.

Q Cycle Activity:

Q1	Q2	Q3	Q4
Decode	Read register 'f'	Process Data	No operation

If skip:

Q1	Q2	Q3	Q4
No operation	No operation	No operation	No operation

If skip and followed by 2-word instruction:

Q1	Q2	Q3	Q4
No operation	No operation	No operation	No operation
No operation	No operation	No operation	No operation

Example:
```
HERE    CPFSEQ REG, 0
NEQUAL  :
EQUAL   :
```

Before Instruction
PC Address = HERE
W = ?
REG = ?
After Instruction
If REG = W;
PC = Address (EQUAL)
If REG ≠ W;
PC = Address (NEQUAL)

© 2010 Microchip Technology Inc.

CPFSGT **Compare f with W, skip if f > W**

Syntax: CPFSGT f {,a}

Operands: $0 \le f \le 255$
$a \in [0,1]$

Operation: (f) – (W),
skip if (f) > (W)
(unsigned comparison)

Status Affected: None

Encoding:

0110	010a	ffff	ffff

Description: Compares the contents of data memory location 'f' to the contents of the W by performing an unsigned subtraction.
If the contents of 'f' are greater than the contents of WREG, then the fetched instruction is discarded and a NOP is executed instead, making this a two-cycle instruction.
If 'a' is '0', the Access Bank is selected.
If 'a' is '1', the BSR is used to select the GPR bank.
If 'a' is '0' and the extended instruction set is enabled, this instruction operates in Indexed Literal Offset Addressing mode whenever $f \le 95$ (5Fh). See **Section 24.2.3 "Byte-Oriented and Bit-Oriented Instructions in Indexed Literal Offset Mode"** for details.

Words: 1

Cycles: 1(2)
Note: 3 cycles if skip and followed by a 2-word instruction.

Q Cycle Activity:

Q1	Q2	Q3	Q4
Decode	Read register 'f'	Process Data	No operation

If skip:

Q1	Q2	Q3	Q4
No operation	No operation	No operation	No operation

If skip and followed by 2-word instruction:

Q1	Q2	Q3	Q4
No operation	No operation	No operation	No operation
No operation	No operation	No operation	No operation

Example:
```
HERE      CPFSGT REG, 0
NGREATER  :
GREATER   :
```
Before Instruction
PC = Address (HERE)
W = ?
After Instruction
If REG > W;
PC = Address (GREATER)
If REG ≤ W;
PC = Address (NGREATER)

CPFSLT **Compare f with W, skip if f < W**

Syntax: CPFSLT f {,a}

Operands: $0 \le f \le 255$
$a \in [0,1]$

Operation: (f) – (W),
skip if (f) < (W)
(unsigned comparison)

Status Affected: None

Encoding:

0110	000a	ffff	ffff

Description: Compares the contents of data memory location 'f' to the contents of W by performing an unsigned subtraction.
If the contents of 'f' are less than the contents of W, then the fetched instruction is discarded and a NOP is executed instead, making this a two-cycle instruction.
If 'a' is '0', the Access Bank is selected.
If 'a' is '1', the BSR is used to select the GPR bank.

Words: 1

Cycles: 1(2)
Note: 3 cycles if skip and followed by a 2-word instruction.

Q Cycle Activity:

Q1	Q2	Q3	Q4
Decode	Read register 'f'	Process Data	No operation

If skip:

Q1	Q2	Q3	Q4
No operation	No operation	No operation	No operation

If skip and followed by 2-word instruction:

Q1	Q2	Q3	Q4
No operation	No operation	No operation	No operation
No operation	No operation	No operation	No operation

Example:
```
HERE    CPFSLT REG, 1
NLESS   :
LESS    :
```
Before Instruction
PC = Address (HERE)
W = ?
After Instruction
If REG < W;
PC = Address (LESS)
If REG ≥ W;
PC = Address (NLESS)

DAW **Decimal Adjust W Register**

Syntax: DAW

Operands: None

Operation: If [W<3:0> > 9] or [DC = 1] then
(W<3:0>) + 6 → W<3:0>;
else
(W<3:0>) → W<3:0>;

If [W<7:4> + DC > 9] or [C = 1] then
(W<7:4>) + 6 + DC → W<7:4> ;
else
(W<7:4>) + DC → W<7:4>

Status Affected: C

Encoding:

0000	0000	0000	0111

Description: DAW adjusts the eight-bit value in W, resulting from the earlier addition of two variables (each in packed BCD format) and produces a correct packed BCD result.

Words: 1

Cycles: 1

Q Cycle Activity:

Q1	Q2	Q3	Q4
Decode	Read register W	Process Data	Write W

Example1:

```
DAW
```

Before Instruction
W = A5h
C = 0
DC = 0
After Instruction
W = 05h
C = 1
DC = 0

Example 2:

Before Instruction
W = CEh
C = 0
DC = 0
After Instruction
W = 34h
C = 1
DC = 0

DECF **Decrement f**

Syntax: DECF f {,d {,a}}

Operands: 0 ≤ f ≤ 255
d ∈ [0,1]
a ∈ [0,1]

Operation: (f) – 1 → dest

Status Affected: C, DC, N, OV, Z

Encoding:

0000	01da	ffff	ffff

Description: Decrement register 'f'. If 'd' is '0', the result is stored in W. If 'd' is '1', the result is stored back in register 'f' (default).
If 'a' is '0', the Access Bank is selected. If 'a' is '1', the BSR is used to select the GPR bank.
If 'a' is '0' and the extended instruction set is enabled, this instruction operates in Indexed Literal Offset Addressing mode whenever f ≤ 95 (5Fh). See **Section 24.2.3 "Byte-Oriented and Bit-Oriented Instructions in Indexed Literal Offset Mode"** for details.

Words: 1

Cycles: 1

Q Cycle Activity:

Q1	Q2	Q3	Q4
Decode	Read register 'f'	Process Data	Write to destination

Example: DECF CNT, 1, 0

Before Instruction
CNT = 01h
Z = 0
After Instruction
CNT = 00h
Z = 1

© 2010 Microchip Technology Inc.

DECFSZ **Decrement f, skip if 0**

Syntax: DECFSZ f {,d {,a}}

Operands: $0 \le f \le 255$
$d \in [0,1]$
$a \in [0,1]$

Operation: (f) – 1 → dest,
skip if result = 0

Status Affected: None

Encoding:

0010	11da	ffff	ffff

Description: The contents of register 'f' are decremented. If 'd' is '0', the result is placed in W. If 'd' is '1', the result is placed back in register 'f' (default). If the result is '0', the next instruction, which is already fetched, is discarded and a NOP is executed instead, making it a two-cycle instruction. If 'a' is '0', the Access Bank is selected. If 'a' is '1', the BSR is used to select the GPR bank. If 'a' is '0' and the extended instruction set is enabled, this instruction operates in Indexed Literal Offset Addressing mode whenever $f \le 95$ (5Fh). See **Section 24.2.3 "Byte-Oriented and Bit-Oriented Instructions in Indexed Literal Offset Mode"** for details.

Words: 1

Cycles: 1(2)
Note: 3 cycles if skip and followed by a 2-word instruction.

Q Cycle Activity:

Q1	Q2	Q3	Q4
Decode	Read register 'f'	Process Data	Write to destination

If skip:

Q1	Q2	Q3	Q4
No operation	No operation	No operation	No operation

If skip and followed by 2-word instruction:

Q1	Q2	Q3	Q4
No operation	No operation	No operation	No operation
No operation	No operation	No operation	No operation

Example:
```
HERE    DECFSZ  CNT, 1, 1
        GOTO    LOOP
CONTINUE
```
Before Instruction
PC = Address (HERE)
After Instruction
CNT = CNT - 1
If CNT = 0;
PC = Address (CONTINUE)
If CNT ≠ 0;
PC = Address (HERE + 2)

DCFSNZ **Decrement f, skip if not 0**

Syntax: DCFSNZ f {,d {,a}}

Operands: $0 \le f \le 255$
$d \in [0,1]$
$a \in [0,1]$

Operation: (f) – 1 → dest,
skip if result ≠ 0

Status Affected: None

Encoding:

0100	11da	ffff	ffff

Description: The contents of register 'f' are decremented. If 'd' is '0', the result is placed in W. If 'd' is '1', the result is placed back in register 'f' (default). If the result is not '0', the next instruction, which is already fetched, is discarded and a NOP is executed instead, making it a two-cycle instruction. If 'a' is '0', the Access Bank is selected. If 'a' is '1', the BSR is used to select the GPR bank. If 'a' is '0' and the extended instruction set is enabled, this instruction operates in Indexed Literal Offset Addressing mode whenever $f \le 95$ (5Fh). See **Section 24.2.3 "Byte-Oriented and Bit-Oriented Instructions in Indexed Literal Offset Mode"** for details.

Words: 1

Cycles: 1(2)
Note: 3 cycles if skip and followed by a 2-word instruction.

Q Cycle Activity:

Q1	Q2	Q3	Q4
Decode	Read register 'f'	Process Data	Write to destination

If skip:

Q1	Q2	Q3	Q4
No operation	No operation	No operation	No operation

If skip and followed by 2-word instruction:

Q1	Q2	Q3	Q4
No operation	No operation	No operation	No operation
No operation	No operation	No operation	No operation

Example:
```
HERE    DCFSNZ  TEMP, 1, 0
ZERO    :
NZERO   :
```
Before Instruction
TEMP = ?
After Instruction
TEMP = TEMP – 1,
If TEMP = 0;
PC = Address (ZERO)
If TEMP ≠ 0;
PC = Address (NZERO)

GOTO — Unconditional Branch

Syntax: GOTO k

Operands: $0 \le k \le 1048575$

Operation: $k \rightarrow PC<20:1>$

Status Affected: None

Encoding:

1st word (k<7:0>)	1110	1111	k_7kkk	$kkkk_0$
2nd word(k<19:8>)	1111	$k_{19}kkk$	kkkk	$kkkk_8$

Description: GOTO allows an unconditional branch anywhere within entire 2-Mbyte memory range. The 20-bit value 'k' is loaded into PC<20:1>. GOTO is always a two-cycle instruction.

Words: 2

Cycles: 2

Q Cycle Activity:

Q1	Q2	Q3	Q4
Decode	Read literal 'k'<7:0>,	No operation	Read literal 'k'<19:8>, Write to PC
No operation	No operation	No operation	No operation

Example: GOTO THERE

After Instruction
PC = Address (THERE)

INCF — Increment f

Syntax: INCF f {,d {,a}}

Operands: $0 \le f \le 255$
$d \in [0,1]$
$a \in [0,1]$

Operation: $(f) + 1 \rightarrow dest$

Status Affected: C, DC, N, OV, Z

Encoding:

0010	10da	ffff	ffff

Description: The contents of register 'f' are incremented. If 'd' is '0', the result is placed in W. If 'd' is '1', the result is placed back in register 'f' (default). If 'a' is '0', the Access Bank is selected. If 'a' is '1', the BSR is used to select the GPR bank. If 'a' is '0' and the extended instruction set is enabled, this instruction operates in Indexed Literal Offset Addressing mode whenever $f \le 95$ (5Fh). See **Section 24.2.3 "Byte-Oriented and Bit-Oriented Instructions in Indexed Literal Offset Mode"** for details.

Words: 1

Cycles: 1

Q Cycle Activity:

Q1	Q2	Q3	Q4
Decode	Read register 'f'	Process Data	Write to destination

Example: INCF CNT, 1, 0

Before Instruction
CNT = FFh
Z = 0
C = ?
DC = ?
After Instruction
CNT = 00h
Z = 1
C = 1
DC = 1

© 2010 Microchip Technology Inc.

INCFSZ **Increment f, skip if 0**

Syntax: INCFSZ f {,d {,a}}

Operands: $0 \le f \le 255$
$d \in [0,1]$
$a \in [0,1]$

Operation: (f) + 1 → dest,
skip if result = 0

Status Affected: None

Encoding:

0011	11da	ffff	ffff

Description: The contents of register 'f' are incremented. If 'd' is '0', the result is placed in W. If 'd' is '1', the result is placed back in register 'f' (default).
If the result is '0', the next instruction, which is already fetched, is discarded and a NOP is executed instead, making it a two-cycle instruction.
If 'a' is '0', the Access Bank is selected. If 'a' is '1', the BSR is used to select the GPR bank.
If 'a' is '0' and the extended instruction set is enabled, this instruction operates in Indexed Literal Offset Addressing mode whenever $f \le 95$ (5Fh). See **Section 24.2.3 "Byte-Oriented and Bit-Oriented Instructions in Indexed Literal Offset Mode"** for details.

Words: 1

Cycles: 1(2)
Note: 3 cycles if skip and followed by a 2-word instruction.

Q Cycle Activity:

Q1	Q2	Q3	Q4
Decode	Read register 'f'	Process Data	Write to destination

If skip:

Q1	Q2	Q3	Q4
No operation	No operation	No operation	No operation

If skip and followed by 2-word instruction:

Q1	Q2	Q3	Q4
No operation	No operation	No operation	No operation
No operation	No operation	No operation	No operation

Example:
```
HERE    INCFSZ   CNT, 1, 0
NZERO   :
ZERO    :
```

Before Instruction
PC = Address (HERE)
After Instruction
CNT = CNT + 1
If CNT = 0;
PC = Address (ZERO)
If CNT ≠ 0;
PC = Address (NZERO)

INFSNZ **Increment f, skip if not 0**

Syntax: INFSNZ f {,d {,a}}

Operands: $0 \le f \le 255$
$d \in [0,1]$
$a \in [0,1]$

Operation: (f) + 1 → dest,
skip if result ≠ 0

Status Affected: None

Encoding:

0100	10da	ffff	ffff

Description: The contents of register 'f' are incremented. If 'd' is '0', the result is placed in W. If 'd' is '1', the result is placed back in register 'f' (default).
If the result is not '0', the next instruction, which is already fetched, is discarded and a NOP is executed instead, making it a two-cycle instruction.
If 'a' is '0', the Access Bank is selected. If 'a' is '1', the BSR is used to select the GPR bank.
If 'a' is '0' and the extended instruction set is enabled, this instruction operates in Indexed Literal Offset Addressing mode whenever $f \le 95$ (5Fh). See **Section 24.2.3 "Byte-Oriented and Bit-Oriented Instructions in Indexed Literal Offset Mode"** for details.

Words: 1

Cycles: 1(2)
Note: 3 cycles if skip and followed by a 2-word instruction.

Q Cycle Activity:

Q1	Q2	Q3	Q4
Decode	Read register 'f'	Process Data	Write to destination

If skip:

Q1	Q2	Q3	Q4
No operation	No operation	No operation	No operation

If skip and followed by 2-word instruction:

Q1	Q2	Q3	Q4
No operation	No operation	No operation	No operation
No operation	No operation	No operation	No operation

Example:
```
HERE    INFSNZ  REG, 1, 0
ZERO
NZERO
```

Before Instruction
PC = Address (HERE)
After Instruction
REG = REG + 1
If REG ≠ 0;
PC = Address (NZERO)
If REG = 0;
PC = Address (ZERO)

IORLW **Inclusive OR literal with W**

Syntax: IORLW k

Operands: $0 \le k \le 255$

Operation: (W) .OR. k → W

Status Affected: N, Z

Encoding:

0000	1001	kkkk	kkkk

Description: The contents of W are ORed with the eight-bit literal 'k'. The result is placed in W.

Words: 1

Cycles: 1

Q Cycle Activity:

Q1	Q2	Q3	Q4
Decode	Read literal 'k'	Process Data	Write to W

Example: IORLW 35h

Before Instruction
W = 9Ah
After Instruction
W = BFh

IORWF **Inclusive OR W with f**

Syntax: IORWF f {,d {,a}}

Operands: $0 \le f \le 255$
$d \in [0,1]$
$a \in [0,1]$

Operation: (W) .OR. (f) → dest

Status Affected: N, Z

Encoding:

0001	00da	ffff	ffff

Description: Inclusive OR W with register 'f'. If 'd' is '0', the result is placed in W. If 'd' is '1', the result is placed back in register 'f' (default).
If 'a' is '0', the Access Bank is selected. If 'a' is '1', the BSR is used to select the GPR bank.
If 'a' is '0' and the extended instruction set is enabled, this instruction operates in Indexed Literal Offset Addressing mode whenever $f \le 95$ (5Fh). See **Section 24.2.3 "Byte-Oriented and Bit-Oriented Instructions in Indexed Literal Offset Mode"** for details.

Words: 1

Cycles: 1

Q Cycle Activity:

Q1	Q2	Q3	Q4
Decode	Read register 'f'	Process Data	Write to destination

Example: IORWF RESULT, 0, 1

Before Instruction
RESULT = 13h
W = 91h
After Instruction
RESULT = 13h
W = 93h

© 2010 Microchip Technology Inc.

LFSR **Load FSR**

Syntax: LFSR f, k

Operands: $0 \le f \le 2$
$0 \le k \le 4095$

Operation: $k \rightarrow FSRf$

Status Affected: None

Encoding:

1110 1111	1110 0000	00ff $k_7$kkk	k_{11}kkk kkkk

Description: The 12-bit literal 'k' is loaded into the File Select Register pointed to by 'f'.

Words: 2

Cycles: 2

Q Cycle Activity:

Q1	Q2	Q3	Q4
Decode	Read literal 'k' MSB	Process Data	Write literal 'k' MSB to FSRfH
Decode	Read literal 'k' LSB	Process Data	Write literal 'k' to FSRfL

Example: `LFSR 2, 3ABh`

After Instruction
FSR2H = 03h
FSR2L = ABh

MOVF **Move f**

Syntax: MOVF f {,d {,a}}

Operands: $0 \le f \le 255$
$d \in [0,1]$
$a \in [0,1]$

Operation: $f \rightarrow dest$

Status Affected: N, Z

Encoding:

0101	00da	ffff	ffff

Description: The contents of register 'f' are moved to a destination dependent upon the status of 'd'. If 'd' is '0', the result is placed in W. If 'd' is '1', the result is placed back in register 'f' (default). Location 'f' can be anywhere in the 256-byte bank.
If 'a' is '0', the Access Bank is selected. If 'a' is '1', the BSR is used to select the GPR bank.
If 'a' is '0' and the extended instruction set is enabled, this instruction operates in Indexed Literal Offset Addressing mode whenever $f \le 95$ (5Fh). See **Section 24.2.3 "Byte-Oriented and Bit-Oriented Instructions in Indexed Literal Offset Mode"** for details.

Words: 1

Cycles: 1

Q Cycle Activity:

Q1	Q2	Q3	Q4
Decode	Read register 'f'	Process Data	Write W

Example: `MOVF REG, 0, 0`

Before Instruction
REG = 22h
W = FFh
After Instruction
REG = 22h
W = 22h

MOVFF **Move f to f**

Syntax: MOVFF f_s,f_d

Operands: $0 \le f_s \le 4095$
$0 \le f_d \le 4095$

Operation: $(f_s) \rightarrow f_d$

Status Affected: None

Encoding:

1st word (source)	1100	ffff	ffff$_s$
2nd word (destin.)	1111	ffff	ffff$_d$

Description: The contents of source register 'f_s' are moved to destination register 'f_d'. Location of source 'f_s' can be anywhere in the 4096-byte data space (000h to FFFh) and location of destination 'f_d' can also be anywhere from 000h to FFFh.
Either source or destination can be W (a useful special situation).
MOVFF is particularly useful for transferring a data memory location to a peripheral register (such as the transmit buffer or an I/O port).
The MOVFF instruction cannot use the PCL, TOSU, TOSH or TOSL as the destination register.

Words: 2

Cycles: 2 (3)

Q Cycle Activity:

Q1	Q2	Q3	Q4
Decode	Read register 'f' (src)	Process Data	No operation
Decode	No operation No dummy read	No operation	Write register 'f' (dest)

Example: MOVFF REG1, REG2

Before Instruction
REG1 = 33h
REG2 = 11h
After Instruction
REG1 = 33h
REG2 = 33h

MOVLB **Move literal to low nibble in BSR**

Syntax: MOVLW k

Operands: $0 \le k \le 255$

Operation: $k \rightarrow$ BSR

Status Affected: None

Encoding:

0000	0001	kkkk	kkkk

Description: The eight-bit literal 'k' is loaded into the Bank Select Register (BSR). The value of BSR<7:4> always remains '0', regardless of the value of k_7:k_4.

Words: 1

Cycles: 1

Q Cycle Activity:

Q1	Q2	Q3	Q4
Decode	Read literal 'k'	Process Data	Write literal 'k' to BSR

Example: MOVLB 5

Before Instruction
BSR Register = 02h
After Instruction
BSR Register = 05h

© 2010 Microchip Technology Inc.

MOVLW **Move literal to W**

Syntax: MOVLW k

Operands: $0 \le k \le 255$

Operation: $k \rightarrow W$

Status Affected: None

Encoding:

0000	1110	kkkk	kkkk

Description: The eight-bit literal ‘k’ is loaded into W.

Words: 1

Cycles: 1

Q Cycle Activity:

Q1	Q2	Q3	Q4
Decode	Read literal ‘k’	Process Data	Write to W

Example: MOVLW 5Ah

After Instruction

W = 5Ah

MOVWF **Move W to f**

Syntax: MOVWF f {,a}

Operands: $0 \le f \le 255$
$a \in [0,1]$

Operation: $(W) \rightarrow f$

Status Affected: None

Encoding:

0110	111a	ffff	ffff

Description: Move data from W to register ‘f’. Location ‘f’ can be anywhere in the 256-byte bank.
If ‘a’ is ‘0’, the Access Bank is selected.
If ‘a’ is ‘1’, the BSR is used to select the GPR bank.
If ‘a’ is ‘0’ and the extended instruction set is enabled, this instruction operates in Indexed Literal Offset Addressing mode whenever $f \le 95$ (5Fh). See **Section 24.2.3 “Byte-Oriented and Bit-Oriented Instructions in Indexed Literal Offset Mode”** for details.

Words: 1

Cycles: 1

Q Cycle Activity:

Q1	Q2	Q3	Q4
Decode	Read register ‘f’	Process Data	Write register ‘f’

Example: MOVWF REG, 0

Before Instruction

W = 4Fh
REG = FFh

After Instruction

W = 4Fh
REG = 4Fh

MULLW **Multiply literal with W**

Syntax: MULLW k

Operands: $0 \le k \le 255$

Operation: (W) x k → PRODH:PRODL

Status Affected: None

Encoding:

0000	1101	kkkk	kkkk

Description: An unsigned multiplication is carried out between the contents of W and the 8-bit literal 'k'. The 16-bit result is placed in the PRODH:PRODL register pair. PRODH contains the high byte. W is unchanged.
None of the Status flags are affected. Note that neither overflow nor carry is possible in this operation. A zero result is possible but not detected.

Words: 1

Cycles: 1

Q Cycle Activity:

Q1	Q2	Q3	Q4
Decode	Read literal 'k'	Process Data	Write registers PRODH: PRODL

Example: MULLW 0C4h

Before Instruction
W = E2h
PRODH = ?
PRODL = ?
After Instruction
W = E2h
PRODH = ADh
PRODL = 08h

MULWF **Multiply W with f**

Syntax: MULWF f {,a}

Operands: $0 \le f \le 255$
$a \in [0,1]$

Operation: (W) x (f) → PRODH:PRODL

Status Affected: None

Encoding:

0000	001a	ffff	ffff

Description: An unsigned multiplication is carried out between the contents of W and the register file location 'f'. The 16-bit result is stored in the PRODH:PRODL register pair. PRODH contains the high byte. Both W and 'f' are unchanged.
None of the Status flags are affected. Note that neither overflow nor carry is possible in this operation. A zero result is possible but not detected.
If 'a' is '0', the Access Bank is selected. If 'a' is '1', the BSR is used to select the GPR bank.
If 'a' is '0' and the extended instruction set is enabled, this instruction operates in Indexed Literal Offset Addressing mode whenever $f \le 95$ (5Fh). See **Section 24.2.3 "Byte-Oriented and Bit-Oriented Instructions in Indexed Literal Offset Mode"** for details.

Words: 1

Cycles: 1

Q Cycle Activity:

Q1	Q2	Q3	Q4
Decode	Read register 'f'	Process Data	Write registers PRODH: PRODL

Example: MULWF REG, 1

Before Instruction
W = C4h
REG = B5h
PRODH = ?
PRODL = ?
After Instruction
W = C4h
REG = B5h
PRODH = 8Ah
PRODL = 94h

© 2010 Microchip Technology Inc.

NEGF **Negate f**

Syntax: NEGF f {,a}

Operands: $0 \le f \le 255$
$a \in [0,1]$

Operation: $(\overline{f}) + 1 \rightarrow f$

Status Affected: N, OV, C, DC, Z

Encoding:

0110	110a	ffff	ffff

Description: Location ‘f’ is negated using two’s complement. The result is placed in the data memory location ‘f’.
If ‘a’ is ‘0’, the Access Bank is selected.
If ‘a’ is ‘1’, the BSR is used to select the GPR bank.
If ‘a’ is ‘0’ and the extended instruction set is enabled, this instruction operates in Indexed Literal Offset Addressing mode whenever $f \le 95$ (5Fh). See **Section 24.2.3 “Byte-Oriented and Bit-Oriented Instructions in Indexed Literal Offset Mode”** for details.

Words: 1

Cycles: 1

Q Cycle Activity:

Q1	Q2	Q3	Q4
Decode	Read register ‘f’	Process Data	Write register ‘f’

Example: NEGF REG, 1

Before Instruction
REG = 0011 1010 [3Ah]
After Instruction
REG = 1100 0110 [C6h]

NOP **No Operation**

Syntax: NOP

Operands: None

Operation: No operation

Status Affected: None

Encoding:

0000 1111	0000 xxxx	0000 xxxx	0000 xxxx

Description: No operation.

Words: 1

Cycles: 1

Q Cycle Activity:

Q1	Q2	Q3	Q4
Decode	No operation	No operation	No operation

Example:

None.

POP **Pop Top of Return Stack**

Syntax: POP

Operands: None

Operation: (TOS) → bit bucket

Status Affected: None

Encoding:

0000	0000	0000	0110

Description: The TOS value is pulled off the return stack and is discarded. The TOS value then becomes the previous value that was pushed onto the return stack. This instruction is provided to enable the user to properly manage the return stack to incorporate a software stack.

Words: 1

Cycles: 1

Q Cycle Activity:

Q1	Q2	Q3	Q4
Decode	No operation	POP TOS value	No operation

Example:
```
POP
GOTO    NEW
```
Before Instruction
TOS = 0031A2h
Stack (1 level down) = 014332h

After Instruction
TOS = 014332h
PC = NEW

PUSH **Push Top of Return Stack**

Syntax: PUSH

Operands: None

Operation: (PC + 2) → TOS

Status Affected: None

Encoding:

0000	0000	0000	0101

Description: The PC + 2 is pushed onto the top of the return stack. The previous TOS value is pushed down on the stack. This instruction allows implementing a software stack by modifying TOS and then pushing it onto the return stack.

Words: 1

Cycles: 1

Q Cycle Activity:

Q1	Q2	Q3	Q4
Decode	PUSH PC + 2 onto return stack	No operation	No operation

Example:
```
PUSH
```
Before Instruction
TOS = 345Ah
PC = 0124h

After Instruction
PC = 0126h
TOS = 0126h
Stack (1 level down) = 345Ah

© 2010 Microchip Technology Inc.

RCALL **Relative Call**

Syntax: RCALL n

Operands: $-1024 \leq n \leq 1023$

Operation: (PC) + 2 → TOS,
(PC) + 2 + 2n → PC

Status Affected: None

Encoding:

1101	1nnn	nnnn	nnnn

Description: Subroutine call with a jump up to 1K from the current location. First, return address (PC + 2) is pushed onto the stack. Then, add the 2's complement number '2n' to the PC. Since the PC will have incremented to fetch the next instruction, the new address will be PC + 2 + 2n. This instruction is a two-cycle instruction.

Words: 1

Cycles: 2

Q Cycle Activity:

Q1	Q2	Q3	Q4
Decode	Read literal 'n' PUSH PC to stack	Process Data	Write to PC
No operation	No operation	No operation	No operation

Example: HERE RCALL Jump

Before Instruction
PC = Address (HERE)
After Instruction
PC = Address (Jump)
TOS = Address (HERE + 2)

RESET **Reset**

Syntax: RESET

Operands: None

Operation: Reset all registers and flags that are affected by a $\overline{MCLR}$ Reset.

Status Affected: All

Encoding:

0000	0000	1111	1111

Description: This instruction provides a way to execute a $\overline{MCLR}$ Reset by software.

Words: 1

Cycles: 1

Q Cycle Activity:

Q1	Q2	Q3	Q4
Decode	Start Reset	No operation	No operation

Example: RESET

After Instruction
Registers = Reset Value
Flags* = Reset Value

RETFIE **Return from Interrupt**

Syntax: RETFIE {s}

Operands: $s \in [0,1]$

Operation: (TOS) → PC,
1 → GIE/GIEH or PEIE/GIEL,
if s = 1
(WS) → W,
(STATUSS) → Status,
(BSRS) → BSR,
PCLATU, PCLATH are unchanged.

Status Affected: GIE/GIEH, PEIE/GIEL.

Encoding:

0000	0000	0001	000s

Description: Return from interrupt. Stack is popped and Top-of-Stack (TOS) is loaded into the PC. Interrupts are enabled by setting either the high or low priority global interrupt enable bit. If 's' = 1, the contents of the shadow registers, WS, STATUSS and BSRS, are loaded into their corresponding registers, W, Status and BSR. If 's' = 0, no update of these registers occurs (default).

Words: 1

Cycles: 2

Q Cycle Activity:

Q1	Q2	Q3	Q4
Decode	No operation	No operation	POP PC from stack Set GIEH or GIEL
No operation	No operation	No operation	No operation

Example:

```
RETFIE  1
```

After Interrupt
PC = TOS
W = WS
BSR = BSRS
Status = STATUSS
GIE/GIEH, PEIE/GIEL = 1

RETLW **Return literal to W**

Syntax: RETLW k

Operands: $0 \le k \le 255$

Operation: k → W,
(TOS) → PC,
PCLATU, PCLATH are unchanged

Status Affected: None

Encoding:

0000	1100	kkkk	kkkk

Description: W is loaded with the eight-bit literal 'k'. The program counter is loaded from the top of the stack (the return address). The high address latch (PCLATH) remains unchanged.

Words: 1

Cycles: 2

Q Cycle Activity:

Q1	Q2	Q3	Q4
Decode	Read literal 'k'	Process Data	POP PC from stack, Write to W
No operation	No operation	No operation	No operation

Example:

```
    CALL TABLE  ; W contains table
                ; offset value
                ; W now has
                ; table value
    :
TABLE
    ADDWF PCL   ; W = offset
    RETLW k0    ; Begin table
    RETLW k1    ;
    :
    :
    RETLW kn    ; End of table
```

Before Instruction
W = 07h
After Instruction
W = value of kn

© 2010 Microchip Technology Inc.

RETURN **Return from Subroutine**

Syntax: RETURN {s}

Operands: s ∈ [0,1]

Operation: (TOS) → PC,
if s = 1
(WS) → W,
(STATUSS) → Status,
(BSRS) → BSR,
PCLATU, PCLATH are unchanged

Status Affected: None

Encoding:

0000	0000	0001	001s

Description: Return from subroutine. The stack is popped and the top of the stack (TOS) is loaded into the program counter. If 's'= 1, the contents of the shadow registers, WS, STATUSS and BSRS, are loaded into their corresponding registers, W, Status and BSR. If 's' = 0, no update of these registers occurs (default).

Words: 1

Cycles: 2

Q Cycle Activity:

Q1	Q2	Q3	Q4
Decode	No operation	Process Data	POP PC from stack
No operation	No operation	No operation	No operation

Example: RETURN

After Instruction:
PC = TOS

RLCF **Rotate Left f through Carry**

Syntax: RLCF f {,d {,a}}

Operands: 0 ≤ f ≤ 255
d ∈ [0,1]
a ∈ [0,1]

Operation: (f<n>) → dest<n + 1>,
(f<7>) → C,
(C) → dest<0>

Status Affected: C, N, Z

Encoding:

0011	01da	ffff	ffff

Description: The contents of register 'f' are rotated one bit to the left through the CARRY flag. If 'd' is '0', the result is placed in W. If 'd' is '1', the result is stored back in register 'f' (default).
If 'a' is '0', the Access Bank is selected. If 'a' is '1', the BSR is used to select the GPR bank.
If 'a' is '0' and the extended instruction set is enabled, this instruction operates in Indexed Literal Offset Addressing mode whenever f ≤ 95 (5Fh). See **Section 24.2.3 "Byte-Oriented and Bit-Oriented Instructions in Indexed Literal Offset Mode"** for details.

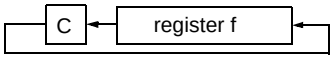

Words: 1

Cycles: 1

Q Cycle Activity:

Q1	Q2	Q3	Q4
Decode	Read register 'f'	Process Data	Write to destination

Example: RLCF REG, 0, 0

Before Instruction
REG = 1110 0110
C = 0
After Instruction
REG = 1110 0110
W = 1100 1100
C = 1

RLNCF **Rotate Left f (No Carry)**

Syntax: RLNCF f {,d {,a}}

Operands: $0 \le f \le 255$
$d \in [0,1]$
$a \in [0,1]$

Operation: (f<n>) → dest<n + 1>,
(f<7>) → dest<0>

Status Affected: N, Z

Encoding:

0100	01da	ffff	ffff

Description: The contents of register 'f' are rotated one bit to the left. If 'd' is '0', the result is placed in W. If 'd' is '1', the result is stored back in register 'f' (default).
If 'a' is '0', the Access Bank is selected. If 'a' is '1', the BSR is used to select the GPR bank.
If 'a' is '0' and the extended instruction set is enabled, this instruction operates in Indexed Literal Offset Addressing mode whenever f ≤ 95 (5Fh). See **Section 24.2.3 "Byte-Oriented and Bit-Oriented Instructions in Indexed Literal Offset Mode"** for details.

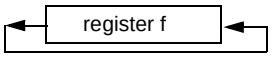

Words: 1

Cycles: 1

Q Cycle Activity:

Q1	Q2	Q3	Q4
Decode	Read register 'f'	Process Data	Write to destination

Example: RLNCF REG, 1, 0

Before Instruction
REG = 1010 1011
After Instruction
REG = 0101 0111

RRCF **Rotate Right f through Carry**

Syntax: RRCF f {,d {,a}}

Operands: $0 \le f \le 255$
$d \in [0,1]$
$a \in [0,1]$

Operation: (f<n>) → dest<n – 1>,
(f<0>) → C,
(C) → dest<7>

Status Affected: C, N, Z

Encoding:

0011	00da	ffff	ffff

Description: The contents of register 'f' are rotated one bit to the right through the CARRY flag. If 'd' is '0', the result is placed in W. If 'd' is '1', the result is placed back in register 'f' (default).
If 'a' is '0', the Access Bank is selected. If 'a' is '1', the BSR is used to select the GPR bank.
If 'a' is '0' and the extended instruction set is enabled, this instruction operates in Indexed Literal Offset Addressing mode whenever f ≤ 95 (5Fh). See **Section 24.2.3 "Byte-Oriented and Bit-Oriented Instructions in Indexed Literal Offset Mode"** for details.

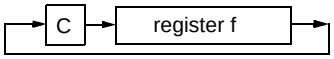

Words: 1

Cycles: 1

Q Cycle Activity:

Q1	Q2	Q3	Q4
Decode	Read register 'f'	Process Data	Write to destination

Example: RRCF REG, 0, 0

Before Instruction
REG = 1110 0110
C = 0
After Instruction
REG = 1110 0110
W = 0111 0011
C = 0

© 2010 Microchip Technology Inc.

RRNCF **Rotate Right f (No Carry)**

Syntax: RRNCF f {,d {,a}}

Operands: $0 \le f \le 255$
$d \in [0,1]$
$a \in [0,1]$

Operation: (f<n>) → dest<n – 1>,
(f<0>) → dest<7>

Status Affected: N, Z

Encoding:

0100	00da	ffff	ffff

Description: The contents of register 'f' are rotated one bit to the right. If 'd' is '0', the result is placed in W. If 'd' is '1', the result is placed back in register 'f' (default).
If 'a' is '0', the Access Bank will be selected (default), overriding the BSR value. If 'a' is '1', then the bank will be selected as per the BSR value.
If 'a' is '0' and the extended instruction set is enabled, this instruction operates in Indexed Literal Offset Addressing mode whenever $f \le 95$ (5Fh). See **Section 24.2.3 "Byte-Oriented and Bit-Oriented Instructions in Indexed Literal Offset Mode"** for details.

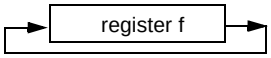

Words: 1

Cycles: 1

Q Cycle Activity:

Q1	Q2	Q3	Q4
Decode	Read register 'f'	Process Data	Write to destination

Example 1: RRNCF REG, 1, 0

Before Instruction
REG = 1101 0111
After Instruction
REG = 1110 1011

Example 2: RRNCF REG, 0, 0

Before Instruction
W = ?
REG = 1101 0111
After Instruction
W = 1110 1011
REG = 1101 0111

SETF **Set f**

Syntax: SETF f {,a}

Operands: $0 \le f \le 255$
$a \in [0,1]$

Operation: FFh → f

Status Affected: None

Encoding:

0110	100a	ffff	ffff

Description: The contents of the specified register are set to FFh.
If 'a' is '0', the Access Bank is selected.
If 'a' is '1', the BSR is used to select the GPR bank.
If 'a' is '0' and the extended instruction set is enabled, this instruction operates in Indexed Literal Offset Addressing mode whenever $f \le 95$ (5Fh). See **Section 24.2.3 "Byte-Oriented and Bit-Oriented Instructions in Indexed Literal Offset Mode"** for details.

Words: 1

Cycles: 1

Q Cycle Activity:

Q1	Q2	Q3	Q4
Decode	Read register 'f'	Process Data	Write register 'f'

Example: SETF REG, 1

Before Instruction
REG = 5Ah
After Instruction
REG = FFh

SLEEP — Enter Sleep mode

Syntax: SLEEP

Operands: None

Operation: 00h → WDT,
0 → $\overline{\text{WDT}}$ postscaler,
1 → $\overline{\text{TO}}$,
0 → $\overline{\text{PD}}$

Status Affected: $\overline{\text{TO}}$, $\overline{\text{PD}}$

Encoding:

0000	0000	0000	0011

Description: The Power-down Status bit ($\overline{\text{PD}}$) is cleared. The Time-out Status bit ($\overline{\text{TO}}$) is set. Watchdog Timer and its postscaler are cleared.
The processor is put into Sleep mode with the oscillator stopped.

Words: 1

Cycles: 1

Q Cycle Activity:

Q1	Q2	Q3	Q4
Decode	No operation	Process Data	Go to Sleep

Example: SLEEP

Before Instruction
$\overline{\text{TO}}$ = ?
$\overline{\text{PD}}$ = ?
After Instruction
$\overline{\text{TO}}$ = 1 †
$\overline{\text{PD}}$ = 0

† If WDT causes wake-up, this bit is cleared.

SUBFWB — Subtract f from W with borrow

Syntax: SUBFWB f {,d {,a}}

Operands: $0 \le f \le 255$
$d \in [0,1]$
$a \in [0,1]$

Operation: (W) – (f) – ($\overline{\text{C}}$) → dest

Status Affected: N, OV, C, DC, Z

Encoding:

0101	01da	ffff	ffff

Description: Subtract register ‘f’ and CARRY flag (borrow) from W (2’s complement method). If ‘d’ is ‘0’, the result is stored in W. If ‘d’ is ‘1’, the result is stored in register ‘f’ (default).
If ‘a’ is ‘0’, the Access Bank is selected. If ‘a’ is ‘1’, the BSR is used to select the GPR bank.
If ‘a’ is ‘0’ and the extended instruction set is enabled, this instruction operates in Indexed Literal Offset Addressing mode whenever $f \le 95$ (5Fh). See **Section 24.2.3 “Byte-Oriented and Bit-Oriented Instructions in Indexed Literal Offset Mode”** for details.

Words: 1

Cycles: 1

Q Cycle Activity:

Q1	Q2	Q3	Q4
Decode	Read register ‘f’	Process Data	Write to destination

Example 1: SUBFWB REG, 1, 0

Before Instruction
REG = 3
W = 2
C = 1
After Instruction
REG = FF
W = 2
C = 0
Z = 0
N = 1 ; result is negative

Example 2: SUBFWB REG, 0, 0

Before Instruction
REG = 2
W = 5
C = 1
After Instruction
REG = 2
W = 3
C = 1
Z = 0
N = 0 ; result is positive

Example 3: SUBFWB REG, 1, 0

Before Instruction
REG = 1
W = 2
C = 0
After Instruction
REG = 0
W = 2
C = 1
Z = 1 ; result is zero
N = 0

© 2010 Microchip Technology Inc.

SUBLW **Subtract W from literal**

Syntax: SUBLW k

Operands: $0 \le k \le 255$

Operation: $k - (W) \rightarrow W$

Status Affected: N, OV, C, DC, Z

Encoding:

0000	1000	kkkk	kkkk

Description: W is subtracted from the eight-bit literal 'k'. The result is placed in W.

Words: 1

Cycles: 1

Q Cycle Activity:

Q1	Q2	Q3	Q4
Decode	Read literal 'k'	Process Data	Write to W

Example 1: SUBLW 02h

Before Instruction
W = 01h
C = ?
After Instruction
W = 01h
C = 1 ; result is positive
Z = 0
N = 0

Example 2: SUBLW 02h

Before Instruction
W = 02h
C = ?
After Instruction
W = 00h
C = 1 ; result is zero
Z = 1
N = 0

Example 3: SUBLW 02h

Before Instruction
W = 03h
C = ?
After Instruction
W = FFh ; (2's complement)
C = 0 ; result is negative
Z = 0
N = 1

SUBWF **Subtract W from f**

Syntax: SUBWF f {,d {,a}}

Operands: $0 \le f \le 255$
$d \in [0,1]$
$a \in [0,1]$

Operation: $(f) - (W) \rightarrow$ dest

Status Affected: N, OV, C, DC, Z

Encoding:

0101	11da	ffff	ffff

Description: Subtract W from register 'f' (2's complement method). If 'd' is '0', the result is stored in W. If 'd' is '1', the result is stored back in register 'f' (default).
If 'a' is '0', the Access Bank is selected. If 'a' is '1', the BSR is used to select the GPR bank.
If 'a' is '0' and the extended instruction set is enabled, this instruction operates in Indexed Literal Offset Addressing mode whenever $f \le 95$ (5Fh). See **Section 24.2.3 "Byte-Oriented and Bit-Oriented Instructions in Indexed Literal Offset Mode"** for details.

Words: 1

Cycles: 1

Q Cycle Activity:

Q1	Q2	Q3	Q4
Decode	Read register 'f'	Process Data	Write to destination

Example 1: SUBWF REG, 1, 0

Before Instruction
REG = 3
W = 2
C = ?
After Instruction
REG = 1
W = 2
C = 1 ; result is positive
Z = 0
N = 0

Example 2: SUBWF REG, 0, 0

Before Instruction
REG = 2
W = 2
C = ?
After Instruction
REG = 2
W = 0
C = 1 ; result is zero
Z = 1
N = 0

Example 3: SUBWF REG, 1, 0

Before Instruction
REG = 1
W = 2
C = ?
After Instruction
REG = FFh ;(2's complement)
W = 2
C = 0 ; result is negative
Z = 0
N = 1

© 2010 Microchip Technology Inc.

SUBWFB **Subtract W from f with Borrow**

Syntax: SUBWFB f {,d {,a}}

Operands: $0 \le f \le 255$
$d \in [0,1]$
$a \in [0,1]$

Operation: (f) – (W) – $(\overline{C})$ → dest

Status Affected: N, OV, C, DC, Z

Encoding:

0101	10da	ffff	ffff

Description: Subtract W and the CARRY flag (borrow) from register 'f' (2's complement method). If 'd' is '0', the result is stored in W. If 'd' is '1', the result is stored back in register 'f' (default).
If 'a' is '0', the Access Bank is selected. If 'a' is '1', the BSR is used to select the GPR bank.
If 'a' is '0' and the extended instruction set is enabled, this instruction operates in Indexed Literal Offset Addressing mode whenever f ≤ 95 (5Fh). See **Section 24.2.3 "Byte-Oriented and Bit-Oriented Instructions in Indexed Literal Offset Mode"** for details.

Words: 1

Cycles: 1

Q Cycle Activity:

Q1	Q2	Q3	Q4
Decode	Read register 'f'	Process Data	Write to destination

Example 1:
```
SUBWFB  REG, 1, 0
Before Instruction
    REG  =  19h   (0001 1001)
    W    =  0Dh   (0000 1101)
    C    =  1
After Instruction
    REG  =  0Ch   (0000 1100)
    W    =  0Dh   (0000 1101)
    C    =  1
    Z    =  0
    N    =  0     ; result is positive
```

Example 2:
```
SUBWFB  REG, 0, 0
Before Instruction
    REG  =  1Bh   (0001 1011)
    W    =  1Ah   (0001 1010)
    C    =  0
After Instruction
    REG  =  1Bh   (0001 1011)
    W    =  00h
    C    =  1
    Z    =  1     ; result is zero
    N    =  0
```

Example 3:
```
SUBWFB  REG, 1, 0
Before Instruction
    REG  =  03h   (0000 0011)
    W    =  0Eh   (0000 1110)
    C    =  1
After Instruction
    REG  =  F5h   (1111 0101)
                  ; [2's comp]
    W    =  0Eh   (0000 1110)
    C    =  0
    Z    =  0
    N    =  1     ; result is negative
```

SWAPF **Swap f**

Syntax: SWAPF f {,d {,a}}

Operands: $0 \le f \le 255$
$d \in [0,1]$
$a \in [0,1]$

Operation: (f<3:0>) → dest<7:4>,
(f<7:4>) → dest<3:0>

Status Affected: None

Encoding:

0011	10da	ffff	ffff

Description: The upper and lower nibbles of register 'f' are exchanged. If 'd' is '0', the result is placed in W. If 'd' is '1', the result is placed in register 'f' (default).
If 'a' is '0', the Access Bank is selected. If 'a' is '1', the BSR is used to select the GPR bank.
If 'a' is '0' and the extended instruction set is enabled, this instruction operates in Indexed Literal Offset Addressing mode whenever f ≤ 95 (5Fh). See **Section 24.2.3 "Byte-Oriented and Bit-Oriented Instructions in Indexed Literal Offset Mode"** for details.

Words: 1

Cycles: 1

Q Cycle Activity:

Q1	Q2	Q3	Q4
Decode	Read register 'f'	Process Data	Write to destination

Example:
```
SWAPF   REG, 1, 0
Before Instruction
    REG  =  53h
After Instruction
    REG  =  35h
```


© 2010 Microchip Technology Inc.

TBLRD Table Read

Syntax: TBLRD (*; *+; *-; +*)

Operands: None

Operation: if TBLRD *,
(Prog Mem (TBLPTR)) → TABLAT;
TBLPTR – No Change;
if TBLRD *+,
(Prog Mem (TBLPTR)) → TABLAT;
(TBLPTR) + 1 → TBLPTR;
if TBLRD *-,
(Prog Mem (TBLPTR)) → TABLAT;
(TBLPTR) – 1 → TBLPTR;
if TBLRD +*,
(TBLPTR) + 1 → TBLPTR;
(Prog Mem (TBLPTR)) → TABLAT;

Status Affected: None

Encoding:

0000	0000	0000	10nn nn=0 * =1 *+ =2 *- =3 +*

Description: This instruction is used to read the contents of Program Memory (P.M.). To address the program memory, a pointer called Table Pointer (TBLPTR) is used.
The TBLPTR (a 21-bit pointer) points to each byte in the program memory. TBLPTR has a 2-Mbyte address range.

TBLPTR[0] = 0: Least Significant Byte of Program Memory Word
TBLPTR[0] = 1: Most Significant Byte of Program Memory Word

The TBLRD instruction can modify the value of TBLPTR as follows:

- no change
- post-increment
- post-decrement
- pre-increment

Words: 1

Cycles: 2

Q Cycle Activity:

Q1	Q2	Q3	Q4
Decode	No operation	No operation	No operation
No operation	No operation (Read Program Memory)	No operation	No operation (Write TABLAT)

TBLRD Table Read (Continued)

Example1: `TBLRD *+ ;`

Before Instruction
TABLAT = 55h
TBLPTR = 00A356h
MEMORY (00A356h) = 34h
After Instruction
TABLAT = 34h
TBLPTR = 00A357h

Example2: `TBLRD +* ;`

Before Instruction
TABLAT = AAh
TBLPTR = 01A357h
MEMORY (01A357h) = 12h
MEMORY (01A358h) = 34h
After Instruction
TABLAT = 34h
TBLPTR = 01A358h

TBLWT **Table Write**

Syntax: TBLWT (*; *+; *-; +*)

Operands: None

Operation:
if TBLWT*,
(TABLAT) → Holding Register;
TBLPTR – No Change;
if TBLWT*+,
(TABLAT) → Holding Register;
(TBLPTR) + 1 → TBLPTR;
if TBLWT*-,
(TABLAT) → Holding Register;
(TBLPTR) – 1 → TBLPTR;
if TBLWT+*,
(TBLPTR) + 1 → TBLPTR;
(TABLAT) → Holding Register;

Status Affected: None

Encoding:

0000	0000	0000	11nn nn=0 * =1 *+ =2 *- =3 +*

Description: This instruction uses the 3 LSBs of TBLPTR to determine which of the 8 holding registers the TABLAT is written to. The holding registers are used to program the contents of Program Memory (P.M.). (Refer to **Section 6.0 "Flash Program Memory"** for additional details on programming Flash memory.)
The TBLPTR (a 21-bit pointer) points to each byte in the program memory. TBLPTR has a 2-MByte address range.
The LSb of the TBLPTR selects which byte of the program memory location to access.

TBLPTR[0] = 0: Least Significant Byte of Program Memory Word
TBLPTR[0] = 1: Most Significant Byte of Program Memory Word

The TBLWT instruction can modify the value of TBLPTR as follows:

- no change
- post-increment
- post-decrement
- pre-increment

Words: 1

Cycles: 2

Q Cycle Activity:

Q1	Q2	Q3	Q4
Decode	No operation	No operation	No operation
No operation	No operation (Read TABLAT)	No operation	No operation (Write to Holding Register)

TBLWT **Table Write (Continued)**

Example1: TBLWT *+;

Before Instruction
TABLAT = 55h
TBLPTR = 00A356h
HOLDING REGISTER (00A356h) = FFh
After Instructions (table write completion)
TABLAT = 55h
TBLPTR = 00A357h
HOLDING REGISTER (00A356h) = 55h

Example 2: TBLWT +*;

Before Instruction
TABLAT = 34h
TBLPTR = 01389Ah
HOLDING REGISTER (01389Ah) = FFh
HOLDING REGISTER (01389Bh) = FFh
After Instruction (table write completion)
TABLAT = 34h
TBLPTR = 01389Bh
HOLDING REGISTER (01389Ah) = FFh
HOLDING REGISTER (01389Bh) = 34h

© 2010 Microchip Technology Inc.

TSTFSZ **Test f, skip if 0**

Syntax: TSTFSZ f {,a}

Operands: $0 \le f \le 255$
$a \in [0,1]$

Operation: skip if f = 0

Status Affected: None

Encoding:

0110	011a	ffff	ffff

Description: If 'f' = 0, the next instruction fetched during the current instruction execution is discarded and a NOP is executed, making this a two-cycle instruction.
If 'a' is '0', the Access Bank is selected.
If 'a' is '1', the BSR is used to select the GPR bank.
If 'a' is '0' and the extended instruction set is enabled, this instruction operates in Indexed Literal Offset Addressing mode whenever $f \le 95$ (5Fh). See **Section 24.2.3 "Byte-Oriented and Bit-Oriented Instructions in Indexed Literal Offset Mode"** for details.

Words: 1

Cycles: 1(2)
Note: 3 cycles if skip and followed by a 2-word instruction.

Q Cycle Activity:

Q1	Q2	Q3	Q4
Decode	Read register 'f'	Process Data	No operation

If skip:

Q1	Q2	Q3	Q4
No operation	No operation	No operation	No operation

If skip and followed by 2-word instruction:

Q1	Q2	Q3	Q4
No operation	No operation	No operation	No operation
No operation	No operation	No operation	No operation

Example:
```
HERE    TSTFSZ  CNT, 1
NZERO   :
ZERO    :
```
Before Instruction
PC = Address (HERE)
After Instruction
If CNT = 00h,
PC = Address (ZERO)
If CNT ≠ 00h,
PC = Address (NZERO)

XORLW **Exclusive OR literal with W**

Syntax: XORLW k

Operands: $0 \le k \le 255$

Operation: (W) .XOR. k → W

Status Affected: N, Z

Encoding:

0000	1010	kkkk	kkkk

Description: The contents of W are XORed with the 8-bit literal 'k'. The result is placed in W.

Words: 1

Cycles: 1

Q Cycle Activity:

Q1	Q2	Q3	Q4
Decode	Read literal 'k'	Process Data	Write to W

Example: XORLW 0AFh
Before Instruction
W = B5h
After Instruction
W = 1Ah

XORWF **Exclusive OR W with f**

Syntax: XORWF f {,d {,a}}

Operands: $0 \le f \le 255$
$d \in [0,1]$
$a \in [0,1]$

Operation: (W) .XOR. (f) → dest

Status Affected: N, Z

Encoding:

0001	10da	ffff	ffff

Description: Exclusive OR the contents of W with register 'f'. If 'd' is '0', the result is stored in W. If 'd' is '1', the result is stored back in the register 'f' (default).
If 'a' is '0', the Access Bank is selected. If 'a' is '1', the BSR is used to select the GPR bank.
If 'a' is '0' and the extended instruction set is enabled, this instruction operates in Indexed Literal Offset Addressing mode whenever $f \le 95$ (5Fh). See **Section 24.2.3 "Byte-Oriented and Bit-Oriented Instructions in Indexed Literal Offset Mode"** for details.

Words: 1

Cycles: 1

Q Cycle Activity:

Q1	Q2	Q3	Q4
Decode	Read register 'f'	Process Data	Write to destination

Example: `XORWF REG, 1, 0`

Before Instruction
REG = AFh
W = B5h
After Instruction
REG = 1Ah
W = B5h

© 2010 Microchip Technology Inc.

24.2 Extended Instruction Set

In addition to the standard 75 instructions of the PIC18 instruction set, PIC18F2XK20/4XK20 devices also provide an optional extension to the core CPU functionality. The added features include eight additional instructions that augment indirect and indexed addressing operations and the implementation of Indexed Literal Offset Addressing mode for many of the standard PIC18 instructions.

The additional features of the extended instruction set are disabled by default. To enable them, users must set the XINST Configuration bit.

The instructions in the extended set can all be classified as literal operations, which either manipulate the File Select Registers, or use them for indexed addressing. Two of the instructions, ADDFSR and SUBFSR, each have an additional special instantiation for using FSR2. These versions (ADDULNK and SUBULNK) allow for automatic return after execution.

The extended instructions are specifically implemented to optimize re-entrant program code (that is, code that is recursive or that uses a software stack) written in high-level languages, particularly C. Among other things, they allow users working in high-level languages to perform certain operations on data structures more efficiently. These include:

- dynamic allocation and deallocation of software stack space when entering and leaving subroutines
- function pointer invocation
- software Stack Pointer manipulation
- manipulation of variables located in a software stack

A summary of the instructions in the extended instruction set is provided in Table 24-3. Detailed descriptions are provided in **Section 24.2.2 "Extended Instruction Set"**. The opcode field descriptions in Table 24-1 apply to both the standard and extended PIC18 instruction sets.

Note:	The instruction set extension and the Indexed Literal Offset Addressing mode were designed for optimizing applications written in C; the user may likely never use these instructions directly in assembler. The syntax for these commands is provided as a reference for users who may be reviewing code that has been generated by a compiler.

24.2.1 EXTENDED INSTRUCTION SYNTAX

Most of the extended instructions use indexed arguments, using one of the File Select Registers and some offset to specify a source or destination register. When an argument for an instruction serves as part of indexed addressing, it is enclosed in square brackets ("[ ]"). This is done to indicate that the argument is used as an index or offset. MPASM™ Assembler will flag an error if it determines that an index or offset value is not bracketed.

When the extended instruction set is enabled, brackets are also used to indicate index arguments in byte-oriented and bit-oriented instructions. This is in addition to other changes in their syntax. For more details, see **Section 24.2.3.1 "Extended Instruction Syntax with Standard PIC18 Commands"**.

Note:	In the past, square brackets have been used to denote optional arguments in the PIC18 and earlier instruction sets. In this text and going forward, optional arguments are denoted by braces ("{ }").

TABLE 24-3: EXTENSIONS TO THE PIC18 INSTRUCTION SET

Mnemonic, Operands		Description	Cycles	16-Bit Instruction Word				Status Affected
				MSb			LSb	
ADDFSR	f, k	Add literal to FSR	1	1110	1000	ffkk	kkkk	None
ADDULNK	k	Add literal to FSR2 and return	2	1110	1000	11kk	kkkk	None
CALLW		Call subroutine using WREG	2	0000	0000	0001	0100	None
MOVSF	z_s, f_d	Move z_s (source) to 1st word	2	1110	1011	0zzz	zzzz	None
		f_d (destination) 2nd word		1111	ffff	ffff	ffff	
MOVSS	z_s, z_d	Move z_s (source) to 1st word	2	1110	1011	1zzz	zzzz	None
		z_d (destination) 2nd word		1111	xxxx	xzzz	zzzz	
PUSHL	k	Store literal at FSR2, decrement FSR2	1	1110	1010	kkkk	kkkk	None
SUBFSR	f, k	Subtract literal from FSR	1	1110	1001	ffkk	kkkk	None
SUBULNK	k	Subtract literal from FSR2 and return	2	1110	1001	11kk	kkkk	None

24.2.2 EXTENDED INSTRUCTION SET

ADDFSR **Add Literal to FSR**

Syntax: ADDFSR f, k

Operands: $0 \le k \le 63$
$f \in [0, 1, 2]$

Operation: FSR(f) + k → FSR(f)

Status Affected: None

Encoding:

1110	1000	ffkk	kkkk

Description: The 6-bit literal 'k' is added to the contents of the FSR specified by 'f'.

Words: 1

Cycles: 1

Q Cycle Activity:

Q1	Q2	Q3	Q4
Decode	Read literal 'k'	Process Data	Write to FSR

Example: `ADDFSR 2, 23h`

Before Instruction
FSR2 = 03FFh
After Instruction
FSR2 = 0422h

ADDULNK **Add Literal to FSR2 and Return**

Syntax: ADDULNK k

Operands: $0 \le k \le 63$

Operation: FSR2 + k → FSR2,
(TOS) → PC

Status Affected: None

Encoding:

1110	1000	11kk	kkkk

Description: The 6-bit literal 'k' is added to the contents of FSR2. A RETURN is then executed by loading the PC with the TOS.
The instruction takes two cycles to execute; a NOP is performed during the second cycle.
This may be thought of as a special case of the ADDFSR instruction, where f = 3 (binary '11'); it operates only on FSR2.

Words: 1

Cycles: 2

Q Cycle Activity:

Q1	Q2	Q3	Q4
Decode	Read literal 'k'	Process Data	Write to FSR
No Operation	No Operation	No Operation	No Operation

Example: `ADDULNK 23h`

Before Instruction
FSR2 = 03FFh
PC = 0100h
After Instruction
FSR2 = 0422h
PC = (TOS)

Note: All PIC18 instructions may take an optional label argument preceding the instruction mnemonic for use in symbolic addressing. If a label is used, the instruction syntax then becomes: {label} instruction argument(s).

© 2010 Microchip Technology Inc.

CALLW **Subroutine Call Using WREG**

Syntax: CALLW

Operands: None

Operation: (PC + 2) → TOS,
(W) → PCL,
(PCLATH) → PCH,
(PCLATU) → PCU

Status Affected: None

Encoding:

0000	0000	0001	0100

Description: First, the return address (PC + 2) is pushed onto the return stack. Next, the contents of W are written to PCL; the existing value is discarded. Then, the contents of PCLATH and PCLATU are latched into PCH and PCU, respectively. The second cycle is executed as a NOP instruction while the new next instruction is fetched. Unlike CALL, there is no option to update W, Status or BSR.

Words: 1

Cycles: 2

Q Cycle Activity:

Q1	Q2	Q3	Q4
Decode	Read WREG	PUSH PC to stack	No operation
No operation	No operation	No operation	No operation

Example:
```
HERE    CALLW
```
Before Instruction
```
PC      =   address (HERE)
PCLATH  =   10h
PCLATU  =   00h
W       =   06h
```
After Instruction
```
PC      =   001006h
TOS     =   address (HERE + 2)
PCLATH  =   10h
PCLATU  =   00h
W       =   06h
```

MOVSF **Move Indexed to f**

Syntax: MOVSF $[z_s]$, f_d

Operands: $0 \le z_s \le 127$
$0 \le f_d \le 4095$

Operation: ((FSR2) + z_s) → f_d

Status Affected: None

Encoding:

1st word (source)	1110	1011	0zzz	$zzzz_s$
2nd word (destin.)	1111	ffff	ffff	$ffff_d$

Description: The contents of the source register are moved to destination register 'f_d'. The actual address of the source register is determined by adding the 7-bit literal offset 'z_s' in the first word to the value of FSR2. The address of the destination register is specified by the 12-bit literal 'f_d' in the second word. Both addresses can be anywhere in the 4096-byte data space (000h to FFFh).
The MOVSF instruction cannot use the PCL, TOSU, TOSH or TOSL as the destination register.
If the resultant source address points to an indirect addressing register, the value returned will be 00h.

Words: 2

Cycles: 2

Q Cycle Activity:

Q1	Q2	Q3	Q4
Decode	Determine source addr	Determine source addr	Read source reg
Decode	No operation No dummy read	No operation	Write register 'f' (dest)

Example:
```
MOVSF   [05h], REG2
```
Before Instruction
```
FSR2            =   80h
Contents
of 85h          =   33h
REG2            =   11h
```
After Instruction
```
FSR2            =   80h
Contents
of 85h          =   33h
REG2            =   33h
```

MOVSS **Move Indexed to Indexed**

Syntax: MOVSS [z_s], [z_d]

Operands: $0 \le z_s \le 127$
$0 \le z_d \le 127$

Operation: ((FSR2) + z_s) → ((FSR2) + z_d)

Status Affected: None

Encoding:

1st word (source)	1110	1011	1zzz	$zzzz_s$
2nd word (dest.)	1111	xxxx	xzzz	$zzzz_d$

Description: The contents of the source register are moved to the destination register. The addresses of the source and destination registers are determined by adding the 7-bit literal offsets 'z_s' or 'z_d', respectively, to the value of FSR2. Both registers can be located anywhere in the 4096-byte data memory space (000h to FFFh).
The MOVSS instruction cannot use the PCL, TOSU, TOSH or TOSL as the destination register.
If the resultant source address points to an indirect addressing register, the value returned will be 00h. If the resultant destination address points to an indirect addressing register, the instruction will execute as a NOP.

Words: 2

Cycles: 2

Q Cycle Activity:

Q1	Q2	Q3	Q4
Decode	Determine source addr	Determine source addr	Read source reg
Decode	Determine dest addr	Determine dest addr	Write to dest reg

Example: `MOVSS [05h], [06h]`

Before Instruction
FSR2 = 80h
Contents of 85h = 33h
Contents of 86h = 11h
After Instruction
FSR2 = 80h
Contents of 85h = 33h
Contents of 86h = 33h

PUSHL **Store Literal at FSR2, Decrement FSR2**

Syntax: PUSHL k

Operands: $0 \le k \le 255$

Operation: k → (FSR2),
FSR2 – 1 → FSR2

Status Affected: None

Encoding:

1111	1010	kkkk	kkkk

Description: The 8-bit literal 'k' is written to the data memory address specified by FSR2. FSR2 is decremented by 1 after the operation. This instruction allows users to push values onto a software stack.

Words: 1

Cycles: 1

Q Cycle Activity:

Q1	Q2	Q3	Q4
Decode	Read 'k'	Process data	Write to destination

Example: `PUSHL 08h`

Before Instruction
FSR2H:FSR2L = 01ECh
Memory (01ECh) = 00h

After Instruction
FSR2H:FSR2L = 01EBh
Memory (01ECh) = 08h

© 2010 Microchip Technology Inc.

SUBFSR **Subtract Literal from FSR**

Syntax: SUBFSR f, k

Operands: $0 \le k \le 63$

$f \in [0, 1, 2]$

Operation: FSR(f) – k → FSRf

Status Affected: None

Encoding:

1110	1001	ffkk	kkkk

Description: The 6-bit literal 'k' is subtracted from the contents of the FSR specified by 'f'.

Words: 1

Cycles: 1

Q Cycle Activity:

Q1	Q2	Q3	Q4
Decode	Read register 'f'	Process Data	Write to destination

Example: SUBFSR 2, 23h

Before Instruction
FSR2 = 03FFh

After Instruction
FSR2 = 03DCh

SUBULNK **Subtract Literal from FSR2 and Return**

Syntax: SUBULNK k

Operands: $0 \le k \le 63$

Operation: FSR2 – k → FSR2
(TOS) → PC

Status Affected: None

Encoding:

1110	1001	11kk	kkkk

Description: The 6-bit literal 'k' is subtracted from the contents of the FSR2. A RETURN is then executed by loading the PC with the TOS. The instruction takes two cycles to execute; a NOP is performed during the second cycle.
This may be thought of as a special case of the SUBFSR instruction, where f = 3 (binary '11'); it operates only on FSR2.

Words: 1

Cycles: 2

Q Cycle Activity:

Q1	Q2	Q3	Q4
Decode	Read register 'f'	Process Data	Write to destination
No Operation	No Operation	No Operation	No Operation

Example: SUBULNK 23h

Before Instruction
FSR2 = 03FFh
PC = 0100h

After Instruction
FSR2 = 03DCh
PC = (TOS)

24.2.3 BYTE-ORIENTED AND BIT-ORIENTED INSTRUCTIONS IN INDEXED LITERAL OFFSET MODE

Note:	Enabling the PIC18 instruction set extension may cause legacy applications to behave erratically or fail entirely.

In addition to eight new commands in the extended set, enabling the extended instruction set also enables Indexed Literal Offset Addressing mode (**Section 5.5.1 "Indexed Addressing with Literal Offset"**). This has a significant impact on the way that many commands of the standard PIC18 instruction set are interpreted.

When the extended set is disabled, addresses embedded in opcodes are treated as literal memory locations: either as a location in the Access Bank ('a' = 0), or in a GPR bank designated by the BSR ('a' = 1). When the extended instruction set is enabled and 'a' = 0, however, a file register argument of 5Fh or less is interpreted as an offset from the pointer value in FSR2 and not as a literal address. For practical purposes, this means that all instructions that use the Access RAM bit as an argument – that is, all byte-oriented and bit-oriented instructions, or almost half of the core PIC18 instructions – may behave differently when the extended instruction set is enabled.

When the content of FSR2 is 00h, the boundaries of the Access RAM are essentially remapped to their original values. This may be useful in creating backward compatible code. If this technique is used, it may be necessary to save the value of FSR2 and restore it when moving back and forth between C and assembly routines in order to preserve the Stack Pointer. Users must also keep in mind the syntax requirements of the extended instruction set (see **Section 24.2.3.1 "Extended Instruction Syntax with Standard PIC18 Commands"**).

Although the Indexed Literal Offset Addressing mode can be very useful for dynamic stack and pointer manipulation, it can also be very annoying if a simple arithmetic operation is carried out on the wrong register. Users who are accustomed to the PIC18 programming must keep in mind that, when the extended instruction set is enabled, register addresses of 5Fh or less are used for Indexed Literal Offset Addressing.

Representative examples of typical byte-oriented and bit-oriented instructions in the Indexed Literal Offset Addressing mode are provided on the following page to show how execution is affected. The operand conditions shown in the examples are applicable to all instructions of these types.

24.2.3.1 Extended Instruction Syntax with Standard PIC18 Commands

When the extended instruction set is enabled, the file register argument, 'f', in the standard byte-oriented and bit-oriented commands is replaced with the literal offset value, 'k'. As already noted, this occurs only when 'f' is less than or equal to 5Fh. When an offset value is used, it must be indicated by square brackets ("[ ]"). As with the extended instructions, the use of brackets indicates to the compiler that the value is to be interpreted as an index or an offset. Omitting the brackets, or using a value greater than 5Fh within brackets, will generate an error in the MPASM Assembler.

If the index argument is properly bracketed for Indexed Literal Offset Addressing, the Access RAM argument is never specified; it will automatically be assumed to be '0'. This is in contrast to standard operation (extended instruction set disabled) when 'a' is set on the basis of the target address. Declaring the Access RAM bit in this mode will also generate an error in the MPASM Assembler.

The destination argument, 'd', functions as before.

In the latest versions of the MPASM™ assembler, language support for the extended instruction set must be explicitly invoked. This is done with either the command line option, /y, or the PE directive in the source listing.

24.2.4 CONSIDERATIONS WHEN ENABLING THE EXTENDED INSTRUCTION SET

It is important to note that the extensions to the instruction set may not be beneficial to all users. In particular, users who are not writing code that uses a software stack may not benefit from using the extensions to the instruction set.

Additionally, the Indexed Literal Offset Addressing mode may create issues with legacy applications written to the PIC18 assembler. This is because instructions in the legacy code may attempt to address registers in the Access Bank below 5Fh. Since these addresses are interpreted as literal offsets to FSR2 when the instruction set extension is enabled, the application may read or write to the wrong data addresses.

When porting an application to the PIC18F2XK20/4XK20, it is very important to consider the type of code. A large, re-entrant application that is written in 'C' and would benefit from efficient compilation will do well when using the instruction set extensions. Legacy applications that heavily use the Access Bank will most likely not benefit from using the extended instruction set.

© 2010 Microchip Technology Inc.

ADDWF **ADD W to Indexed (Indexed Literal Offset mode)**

Syntax: ADDWF [k] {,d}

Operands: $0 \le k \le 95$
$d \in [0,1]$

Operation: (W) + ((FSR2) + k) → dest

Status Affected: N, OV, C, DC, Z

Encoding:

0010	01d0	kkkk	kkkk

Description: The contents of W are added to the contents of the register indicated by FSR2, offset by the value 'k'.
If 'd' is '0', the result is stored in W. If 'd' is '1', the result is stored back in register 'f' (default).

Words: 1

Cycles: 1

Q Cycle Activity:

Q1	Q2	Q3	Q4
Decode	Read 'k'	Process Data	Write to destination

Example: ADDWF [OFST], 0

Before Instruction
W = 17h
OFST = 2Ch
FSR2 = 0A00h
Contents of 0A2Ch = 20h

After Instruction
W = 37h
Contents of 0A2Ch = 20h

BSF **Bit Set Indexed (Indexed Literal Offset mode)**

Syntax: BSF [k], b

Operands: $0 \le f \le 95$
$0 \le b \le 7$

Operation: 1 → ((FSR2) + k)<b>

Status Affected: None

Encoding:

1000	bbb0	kkkk	kkkk

Description: Bit 'b' of the register indicated by FSR2, offset by the value 'k', is set.

Words: 1

Cycles: 1

Q Cycle Activity:

Q1	Q2	Q3	Q4
Decode	Read register 'f'	Process Data	Write to destination

Example: BSF [FLAG_OFST], 7

Before Instruction
FLAG_OFST = 0Ah
FSR2 = 0A00h
Contents of 0A0Ah = 55h

After Instruction
Contents of 0A0Ah = D5h

SETF **Set Indexed (Indexed Literal Offset mode)**

Syntax: SETF [k]

Operands: $0 \le k \le 95$

Operation: FFh → ((FSR2) + k)

Status Affected: None

Encoding:

0110	1000	kkkk	kkkk

Description: The contents of the register indicated by FSR2, offset by 'k', are set to FFh.

Words: 1

Cycles: 1

Q Cycle Activity:

Q1	Q2	Q3	Q4
Decode	Read 'k'	Process Data	Write register

Example: SETF [OFST]

Before Instruction
OFST = 2Ch
FSR2 = 0A00h
Contents of 0A2Ch = 00h

After Instruction
Contents of 0A2Ch = FFh

24.2.5 SPECIAL CONSIDERATIONS WITH MICROCHIP MPLAB® IDE TOOLS

The latest versions of Microchip's software tools have been designed to fully support the extended instruction set of the PIC18F2XK20/4XK20 family of devices. This includes the MPLAB C18 C compiler, MPASM assembly language and MPLAB Integrated Development Environment (IDE).

When selecting a target device for software development, MPLAB IDE will automatically set default Configuration bits for that device. The default setting for the XINST Configuration bit is '0', disabling the extended instruction set and Indexed Literal Offset Addressing mode. For proper execution of applications developed to take advantage of the extended instruction set, XINST must be set during programming.

To develop software for the extended instruction set, the user must enable support for the instructions and the Indexed Addressing mode in their language tool(s). Depending on the environment being used, this may be done in several ways:

- A menu option, or dialog box within the environment, that allows the user to configure the language tool and its settings for the project
- A command line option
- A directive in the source code

These options vary between different compilers, assemblers and development environments. Users are encouraged to review the documentation accompanying their development systems for the appropriate information.

© 2010 Microchip Technology Inc.

25.0 DEVELOPMENT SUPPORT

The PIC® microcontrollers and dsPIC® digital signal controllers are supported with a full range of software and hardware development tools:

- Integrated Development Environment
  - MPLAB® IDE Software
- Compilers/Assemblers/Linkers
  - MPLAB C Compiler for Various Device Families
  - HI-TECH C for Various Device Families
  - MPASM™ Assembler
  - MPLINK™ Object Linker/ MPLIB™ Object Librarian
  - MPLAB Assembler/Linker/Librarian for Various Device Families
- Simulators
  - MPLAB SIM Software Simulator
- Emulators
  - MPLAB REAL ICE™ In-Circuit Emulator
- In-Circuit Debuggers
  - MPLAB ICD 3
  - PICkit™ 3 Debug Express
- Device Programmers
  - PICkit™ 2 Programmer
  - MPLAB PM3 Device Programmer
- Low-Cost Demonstration/Development Boards, Evaluation Kits, and Starter Kits

25.1 MPLAB Integrated Development Environment Software

The MPLAB IDE software brings an ease of software development previously unseen in the 8/16/32-bit microcontroller market. The MPLAB IDE is a Windows® operating system-based application that contains:

- A single graphical interface to all debugging tools
  - Simulator
  - Programmer (sold separately)
  - In-Circuit Emulator (sold separately)
  - In-Circuit Debugger (sold separately)
- A full-featured editor with color-coded context
- A multiple project manager
- Customizable data windows with direct edit of contents
- High-level source code debugging
- Mouse over variable inspection
- Drag and drop variables from source to watch windows
- Extensive on-line help
- Integration of select third party tools, such as IAR C Compilers

The MPLAB IDE allows you to:

- Edit your source files (either C or assembly)
- One-touch compile or assemble, and download to emulator and simulator tools (automatically updates all project information)
- Debug using:
  - Source files (C or assembly)
  - Mixed C and assembly
  - Machine code

MPLAB IDE supports multiple debugging tools in a single development paradigm, from the cost-effective simulators, through low-cost in-circuit debuggers, to full-featured emulators. This eliminates the learning curve when upgrading to tools with increased flexibility and power.

25.2 MPLAB C Compilers for Various Device Families

The MPLAB C Compiler code development systems are complete ANSI C compilers for Microchip's PIC18, PIC24 and PIC32 families of microcontrollers and the dsPIC30 and dsPIC33 families of digital signal controllers. These compilers provide powerful integration capabilities, superior code optimization and ease of use.

For easy source level debugging, the compilers provide symbol information that is optimized to the MPLAB IDE debugger.

25.3 HI-TECH C for Various Device Families

The HI-TECH C Compiler code development systems are complete ANSI C compilers for Microchip's PIC family of microcontrollers and the dsPIC family of digital signal controllers. These compilers provide powerful integration capabilities, omniscient code generation and ease of use.

For easy source level debugging, the compilers provide symbol information that is optimized to the MPLAB IDE debugger.

The compilers include a macro assembler, linker, preprocessor, and one-step driver, and can run on multiple platforms.

25.4 MPASM Assembler

The MPASM Assembler is a full-featured, universal macro assembler for PIC10/12/16/18 MCUs.

The MPASM Assembler generates relocatable object files for the MPLINK Object Linker, Intel® standard HEX files, MAP files to detail memory usage and symbol reference, absolute LST files that contain source lines and generated machine code and COFF files for debugging.

The MPASM Assembler features include:

- Integration into MPLAB IDE projects
- User-defined macros to streamline assembly code
- Conditional assembly for multi-purpose source files
- Directives that allow complete control over the assembly process

25.5 MPLINK Object Linker/ MPLIB Object Librarian

The MPLINK Object Linker combines relocatable objects created by the MPASM Assembler and the MPLAB C18 C Compiler. It can link relocatable objects from precompiled libraries, using directives from a linker script.

The MPLIB Object Librarian manages the creation and modification of library files of precompiled code. When a routine from a library is called from a source file, only the modules that contain that routine will be linked in with the application. This allows large libraries to be used efficiently in many different applications.

The object linker/library features include:

- Efficient linking of single libraries instead of many smaller files
- Enhanced code maintainability by grouping related modules together
- Flexible creation of libraries with easy module listing, replacement, deletion and extraction

25.6 MPLAB Assembler, Linker and Librarian for Various Device Families

MPLAB Assembler produces relocatable machine code from symbolic assembly language for PIC24, PIC32 and dsPIC devices. MPLAB C Compiler uses the assembler to produce its object file. The assembler generates relocatable object files that can then be archived or linked with other relocatable object files and archives to create an executable file. Notable features of the assembler include:

- Support for the entire device instruction set
- Support for fixed-point and floating-point data
- Command line interface
- Rich directive set
- Flexible macro language
- MPLAB IDE compatibility

© 2010 Microchip Technology Inc.

25.7 MPLAB SIM Software Simulator

The MPLAB SIM Software Simulator allows code development in a PC-hosted environment by simulating the PIC MCUs and dsPIC® DSCs on an instruction level. On any given instruction, the data areas can be examined or modified and stimuli can be applied from a comprehensive stimulus controller. Registers can be logged to files for further run-time analysis. The trace buffer and logic analyzer display extend the power of the simulator to record and track program execution, actions on I/O, most peripherals and internal registers.

The MPLAB SIM Software Simulator fully supports symbolic debugging using the MPLAB C Compilers, and the MPASM and MPLAB Assemblers. The software simulator offers the flexibility to develop and debug code outside of the hardware laboratory environment, making it an excellent, economical software development tool.

25.8 MPLAB REAL ICE In-Circuit Emulator System

MPLAB REAL ICE In-Circuit Emulator System is Microchip's next generation high-speed emulator for Microchip Flash DSC and MCU devices. It debugs and programs PIC® Flash MCUs and dsPIC® Flash DSCs with the easy-to-use, powerful graphical user interface of the MPLAB Integrated Development Environment (IDE), included with each kit.

The emulator is connected to the design engineer's PC using a high-speed USB 2.0 interface and is connected to the target with either a connector compatible with in-circuit debugger systems (RJ11) or with the new high-speed, noise tolerant, Low-Voltage Differential Signal (LVDS) interconnection (CAT5).

The emulator is field upgradable through future firmware downloads in MPLAB IDE. In upcoming releases of MPLAB IDE, new devices will be supported, and new features will be added. MPLAB REAL ICE offers significant advantages over competitive emulators including low-cost, full-speed emulation, run-time variable watches, trace analysis, complex breakpoints, a ruggedized probe interface and long (up to three meters) interconnection cables.

25.9 MPLAB ICD 3 In-Circuit Debugger System

MPLAB ICD 3 In-Circuit Debugger System is Microchip's most cost effective high-speed hardware debugger/programmer for Microchip Flash Digital Signal Controller (DSC) and microcontroller (MCU) devices. It debugs and programs PIC® Flash microcontrollers and dsPIC® DSCs with the powerful, yet easy-to-use graphical user interface of MPLAB Integrated Development Environment (IDE).

The MPLAB ICD 3 In-Circuit Debugger probe is connected to the design engineer's PC using a high-speed USB 2.0 interface and is connected to the target with a connector compatible with the MPLAB ICD 2 or MPLAB REAL ICE systems (RJ-11). MPLAB ICD 3 supports all MPLAB ICD 2 headers.

25.10 PICkit 3 In-Circuit Debugger/ Programmer and PICkit 3 Debug Express

The MPLAB PICkit 3 allows debugging and programming of PIC® and dsPIC® Flash microcontrollers at a most affordable price point using the powerful graphical user interface of the MPLAB Integrated Development Environment (IDE). The MPLAB PICkit 3 is connected to the design engineer's PC using a full speed USB interface and can be connected to the target via an Microchip debug (RJ-11) connector (compatible with MPLAB ICD 3 and MPLAB REAL ICE). The connector uses two device I/O pins and the reset line to implement in-circuit debugging and In-Circuit Serial Programming™.

The PICkit 3 Debug Express include the PICkit 3, demo board and microcontroller, hookup cables and CDROM with user's guide, lessons, tutorial, compiler and MPLAB IDE software.

25.11 PICkit 2 Development Programmer/Debugger and PICkit 2 Debug Express

The PICkit™ 2 Development Programmer/Debugger is a low-cost development tool with an easy to use interface for programming and debugging Microchip's Flash families of microcontrollers. The full featured Windows® programming interface supports baseline (PIC10F, PIC12F5xx, PIC16F5xx), midrange (PIC12F6xx, PIC16F), PIC18F, PIC24, dsPIC30, dsPIC33, and PIC32 families of 8-bit, 16-bit, and 32-bit microcontrollers, and many Microchip Serial EEPROM products. With Microchip's powerful MPLAB Integrated Development Environment (IDE) the PICkit™ 2 enables in-circuit debugging on most PIC® microcontrollers. In-Circuit-Debugging runs, halts and single steps the program while the PIC microcontroller is embedded in the application. When halted at a breakpoint, the file registers can be examined and modified.

The PICkit 2 Debug Express include the PICkit 2, demo board and microcontroller, hookup cables and CDROM with user's guide, lessons, tutorial, compiler and MPLAB IDE software.

25.12 MPLAB PM3 Device Programmer

The MPLAB PM3 Device Programmer is a universal, CE compliant device programmer with programmable voltage verification at V_{DDMIN} and V_{DDMAX} for maximum reliability. It features a large LCD display (128 x 64) for menus and error messages and a modular, detachable socket assembly to support various package types. The ICSP™ cable assembly is included as a standard item. In Stand-Alone mode, the MPLAB PM3 Device Programmer can read, verify and program PIC devices without a PC connection. It can also set code protection in this mode. The MPLAB PM3 connects to the host PC via an RS-232 or USB cable. The MPLAB PM3 has high-speed communications and optimized algorithms for quick programming of large memory devices and incorporates an MMC card for file storage and data applications.

25.13 Demonstration/Development Boards, Evaluation Kits, and Starter Kits

A wide variety of demonstration, development and evaluation boards for various PIC MCUs and dsPIC DSCs allows quick application development on fully functional systems. Most boards include prototyping areas for adding custom circuitry and provide application firmware and source code for examination and modification.

The boards support a variety of features, including LEDs, temperature sensors, switches, speakers, RS-232 interfaces, LCD displays, potentiometers and additional EEPROM memory.

The demonstration and development boards can be used in teaching environments, for prototyping custom circuits and for learning about various microcontroller applications.

In addition to the PICDEM™ and dsPICDEM™ demonstration/development board series of circuits, Microchip has a line of evaluation kits and demonstration software for analog filter design, KEELOQ® security ICs, CAN, IrDA®, PowerSmart battery management, SEEVAL® evaluation system, Sigma-Delta ADC, flow rate sensing, plus many more.

Also available are starter kits that contain everything needed to experience the specified device. This usually includes a single application and debug capability, all on one board.

Check the Microchip web page (www.microchip.com) for the complete list of demonstration, development and evaluation kits.

© 2010 Microchip Technology Inc.

26.0 ELECTRICAL CHARACTERISTICS

Absolute Maximum Ratings (†)

Ambient temperature under bias ..... -40°C to +125°C
Storage temperature ..... -65°C to +150°C
Voltage on any pin with respect to V_{SS} (except V_{DD}, and $\overline{MCLR}$) ..... -0.3V to (V_{DD} + 0.3V)
Voltage on V_{DD} with respect to V_{SS} ..... -0.3V to +4.5V
Voltage on $\overline{MCLR}$ with respect to V_{SS} **(Note 2)** ..... 0V to +11.0V
Total power dissipation **(Note 1)** 1.0W
Maximum current out of V_{SS} pin (-40°C to +85°C) ..... 300 mA
Maximum current out of V_{SS} pin (+85°C to +125°C) ..... 125 mA
Maximum current into V_{DD} pin (-40°C to +85°C) ..... 200 mA
Maximum current into V_{DD} pin (+85°C to +125°C) ..... 85 mA
Input clamp current, I_{IK} (V_I < 0 or V_I > V_{DD}) ..... ±20 mA
Output clamp current, I_{OK} (V_O < 0 or V_O > V_{DD}) ..... ±20 mA
Maximum output current sunk by any I/O pin ..... 25 mA
Maximum output current sourced by any I/O pin ..... 25 mA
Maximum current sunk by all ports (-40°C to +85°C) ..... 200 mA
Maximum current sunk by all ports (+85°C to +125°C) ..... 110 mA
Maximum current sourced by all ports (-40°C to +85°C) ..... 185 mA
Maximum current sourced by all ports (+85°C to +125°C) ..... 70 mA

Note 1: Power dissipation is calculated as follows:
$P_{dis} = V_{DD} \times \{I_{DD} - \sum I_{OH}\} + \sum \{(V_{DD} - V_{OH}) \times I_{OH}\} + \sum(V_{OL} \times I_{OL})$

2: Voltage spikes below V_{SS} at the $\overline{MCLR}$/V_{PP}/RE3 pin, inducing currents greater than 80 mA, may cause latch-up. Thus, a series resistor of 50-100Ω should be used when applying a "low" level to the $\overline{MCLR}$/V_{PP}/RE3 pin, rather than pulling this pin directly to V_{SS}.

† **NOTICE:** Stresses above those listed under "Absolute Maximum Ratings" may cause permanent damage to the device. This is a stress rating only and functional operation of the device at those or any other conditions above those indicated in the operation listings of this specification is not implied. Exposure to maximum rating conditions for extended periods may affect device reliability.

FIGURE 26-1: PIC18F2XK20/4XK20 VOLTAGE-FREQUENCY GRAPH (EXTENDED)

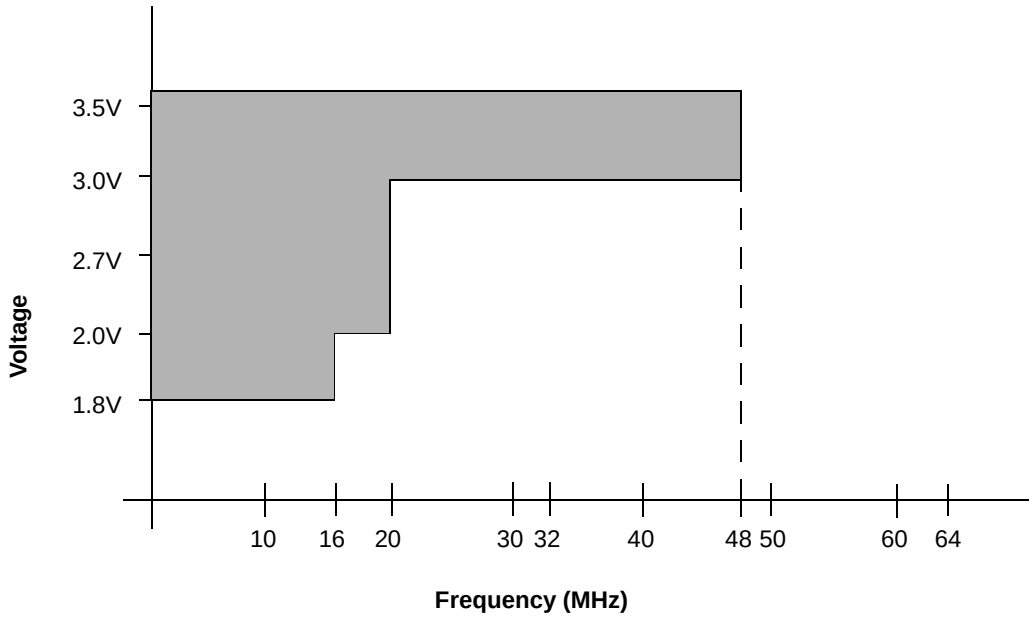

Note: Maximum Frequency 16 MHz, 1.8V to 2.0V, -40°C to +125°C
Maximum Frequency 20 MHz, 2.0V to 3.0V, -40°C to +125°C
Maximum Frequency 48 MHz, 3.0V to 3.6V, -40°C to +125°C

FIGURE 26-2: PIC18F2XK20/4XK20 VOLTAGE-FREQUENCY GRAPH (INDUSTRIAL)

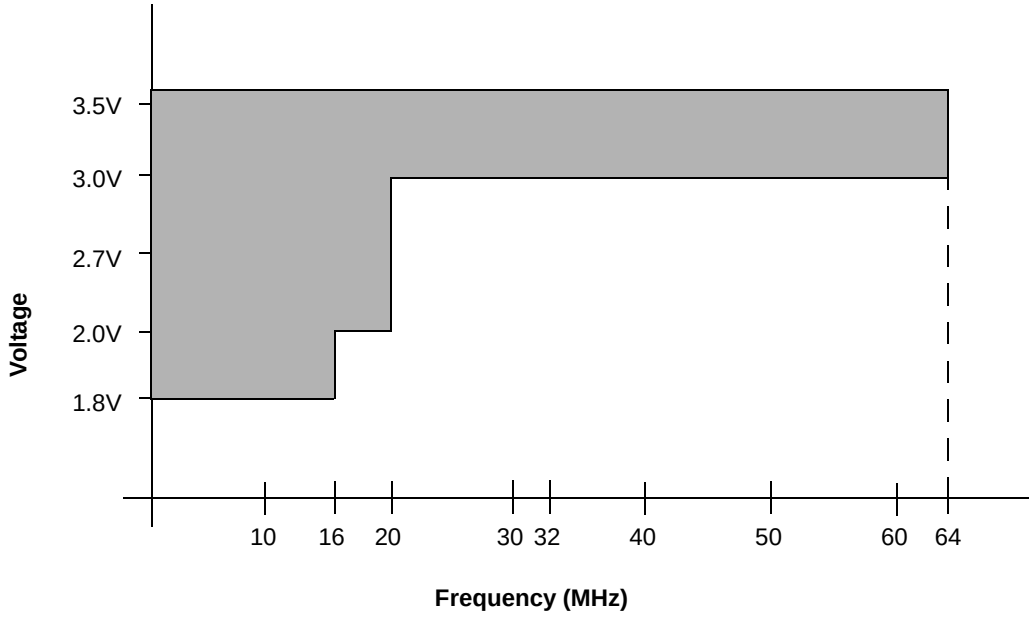

Note: Maximum Frequency 16 MHz, 1.8V to 2.0V, -40°C to +85°C
Maximum Frequency 20 MHz, 2.0V to 3.0V, -40°C to +85°C
Maximum Frequency 64 MHz, 3.0V to 3.6V, -40°C to +85°C

© 2010 Microchip Technology Inc.

26.1 DC Characteristics: Supply Voltage, PIC18F2XK20/4XK20

PIC18F2XK20/4XK20			Standard Operating Conditions (unless otherwise stated) Operating temperature -40°C ≤ TA ≤ +125°C				
Param No.	**Symbol**	**Characteristic**	**Min**	**Typ**	**Max**	**Units**	**Conditions**
D001	VDD	**Supply Voltage**	1.8	—	3.6	V	
D002	VDR	**RAM Data Retention Voltage(1)**	1.5	—	—	V	
D003	VPOR	**VDD Start Voltage** to ensure internal Power-on Reset signal	—	—	0.7	V	See section on Power-on Reset for details
D004	SVDD	**VDD Rise Rate** to ensure internal Power-on Reset signal	0.05	—	—	V/ms	See section on Power-on Reset for details
D005	VBOR	**Brown-out Reset Voltage**					
		BORV<1:0> = 11(2)	1.72	1.82	1.95	V	
		BORV<1:0> = 10	2.15	2.27	2.40	V	
		BORV<1:0> = 01	2.65	2.75	2.90	V	
		BORV<1:0> = 00(3)	2.98	3.08	3.25	V	

Note 1: This is the limit to which VDD can be lowered in Sleep mode, or during a device Reset, without losing RAM data.

2: With BOR enabled, operation is supported until a BOR occurs. This is valid although VDD may be below the minimum rated supply voltage.

3: With BOR enabled, full-speed operation (FOSC = 64 MHz) is supported until a BOR occurs. This is valid although VDD may be below the minimum voltage for this frequency.

26.2 DC Characteristics: Power-Down Current, PIC18F2XK20/4XK20

PIC18F2XK20/4XK20		Standard Operating Conditions (unless otherwise stated) Operating temperature -40°C ≤ TA ≤ +125°C				
Param No.	**Device Characteristics**	**Typ**	**Max**	**Units**	**Conditions**	
D006	**Power-down Current (IPD)(1)**	0.05	1.0	µA	-40°C	VDD = 1.8V, (**Sleep** mode)
		0.05	1.0	µA	+25°C	
		0.6	3.0	µA	+85°C	
		4	20	µA	+125°C	
D007		0.1	1.0	µA	-40°C	VDD = 3.0V, (**Sleep** mode)
		0.1	1.0	µA	+25°C	
		0.7	3.0	µA	+85°C	
		5	20	µA	+125°C	

Note 1: The power-down current in Sleep mode does not depend on the oscillator type. Power-down current is measured with the part in Sleep mode, with all I/O pins in high-impedance state and tied to VDD or VSS and all features that add delta current disabled (such as WDT, Timer1 Oscillator, BOR, etc.).

26.3 DC Characteristics: RC Run Supply Current, PIC18F2XK20/4XK20

PIC18F2XK20/4XK20		Standard Operating Conditions (unless otherwise stated) Operating temperature -40°C ≤ TA ≤ +125°C					
Param No.	**Device Characteristics**	**Typ**	**Max**	**Units**	**Conditions**		
D008	**Supply Current (IDD)(1, 2)**	5.5	9	µA	-40°C	VDD = 1.8V	FOSC = 31 kHz (**RC_RUN** mode, LFINTOSC source)
		6.0	10	µA	+25°C		
		6.5	14	µA	+85°C		
		9.0	30	µA	+125°C		
D008A		10.0	15	µA	-40°C	VDD = 3.0V	
		10.5	16	µA	+25°C		
		11.0	20	µA	+85°C		
		14.0	40	µA	+125°C		
D009		0.40	0.50	mA	-40°C TO +125°C	VDD = 1.8V	FOSC = 1 MHz (**RC_RUN** mode, HF-INTOSC source)
D009A		0.60	0.80	mA	-40°C TO +125°C	VDD = 3.0V	
D010		2.2	3.0	mA	-40°C TO +125°C	VDD = 1.8V	FOSC = 16 MHz (**RC_RUN** mode, HF-INTOSC source)
D010A		3.8	4.4	mA	-40°C TO +125°C	VDD = 3.0V	

Note 1: The supply current is mainly a function of operating voltage, frequency and mode. Other factors, such as I/O pin loading and switching rate, oscillator type and circuit, internal code execution pattern and temperature, also have an impact on the current consumption.

2: The test conditions for all IDD measurements in active operation mode are:

All I/O pins set as outputs driven to Vss;

$\overline{MCLR}$ = VDD;

OSC1 = external square wave, from rail-to-rail (PRI_RUN and PRI_IDLE only).

© 2010 Microchip Technology Inc.

26.4 DC Characteristics: RC Idle Supply Current, PIC18F2XK20/4XK20

PIC18F2XK20/4XK20		Standard Operating Conditions (unless otherwise stated) Operating temperature -40°C ≤ TA ≤ +125°C					
Param No.	**Device Characteristics**	**Typ**	**Max**	**Units**	**Conditions**		
D011	**Supply Current (I_{DD})(1, 2)**	2.0	5	µA	-40°C	VDD = 1.8V	FOSC = 31 kHz (**RC_IDLE** mode, LFINTOSC source)
		2.0	5	µA	+25°C		
		2.5	9	µA	+85°C		
		5.0	25	µA	+125°C		
D011A		3.5	8	µA	-40°C	VDD = 3.0V	
		3.5	8	µA	+25°C		
		4.0	12	µA	+85°C		
		7.0	30	µA	+125°C		
D012		0.30	0.40	mA	-40°C to +125°C	VDD = 1.8V	FOSC = 1 MHz (**RC_IDLE** mode, HF-INTOSC source)
D012A		0.40	0.60	mA	-40°C to +125°C	VDD = 3.0V	
D013		1.0	1.2	mA	-40°C to +125°C	VDD = 1.8V	FOSC = 16 MHz (**RC_IDLE** mode, HF-INTOSC source)
D013A		1.6	2.0	mA	-40°C to +125°C	VDD = 3.0V	

Note 1: The supply current is mainly a function of operating voltage, frequency and mode. Other factors, such as I/O pin loading and switching rate, oscillator type and circuit, internal code execution pattern and temperature, also have an impact on the current consumption.

2: The test conditions for all IDD measurements in active operation mode are:

All I/O pins set as outputs driven to Vss;

$\overline{MCLR}$ = VDD;

OSC1 = external square wave, from rail-to-rail (PRI_RUN and PRI_IDLE only).

26.5 DC Characteristics: Primary Run Supply Current, PIC18F2XK20/4XK20

PIC18F2XK20/4XK20		Standard Operating Conditions (unless otherwise stated) Operating temperature -40°C ≤ TA ≤ +125°C					
Param No.	**Device Characteristics**	**Typ**	**Max**	**Units**	**Conditions**		
D014	**Supply Current (IDD)(1, 2)**	0.25	0.45	mA	-40°C to +125°C	VDD = 1.8V	FOSC = 1 MHz (**PRI_RUN**, EC oscillator)
D014A		0.50	0.75	mA	-40°C to +125°C	VDD = 3.0V	
D015		2.7	3.2	mA	-40°C to +125°C	VDD = 2V	FOSC = 20 MHz (**PRI_RUN**, EC oscillator)
D015A		4.3	5.0	mA	-40°C to +125°C	VDD = 3.0V	
D016		12.2	14.0	mA	-40°C to +85°C	VDD = 3.0V	FOSC = 64 MHz (**PRI_RUN**, EC oscillator)
D017		2.1	2.9	mA	-40°C to +125°C	VDD = 1.8V	FOSC = 4 MHz 16 MHz Internal (**PRI_RUN HS+PLL**)
D017A		4.2	5.0	mA	-40°C to +125°C	VDD = 3.0V	
D018		12.2	15.0	mA	-40°C to +85°C	VDD = 3.0V	FOSC = 16 MHz 64 MHz Internal (**PRI_RUN HS+PLL**)

Note 1: The supply current is mainly a function of operating voltage, frequency and mode. Other factors, such as I/O pin loading and switching rate, oscillator type and circuit, internal code execution pattern and temperature, also have an impact on the current consumption.

2: The test conditions for all IDD measurements in active operation mode are:
All I/O pins set as outputs driven to Vss;
$\overline{MCLR}$ = VDD;
OSC1 = external square wave, from rail-to-rail (PRI_RUN and PRI_IDLE only).

26.6 DC Characteristics: Primary Idle Supply Current, PIC18F2XK20/4XK20

PIC18F2XK20/4XK20		Standard Operating Conditions (unless otherwise stated) Operating temperature -40°C ≤ TA ≤ +125°C					
Param No.	**Device Characteristics**	**Typ**	**Max**	**Units**	**Conditions**		
D019	**Supply Current (IDD)(1, 2)**	0.05	0.07	mA	-40°C to +125°C	VDD = 1.8V	FOSC = 1 MHz (**PRI_IDLE** mode, EC oscillator)
D019A		0.09	0.15	mA	-40°C to +125°C	VDD = 3.0V	
D020		1.2	1.6	mA	-40°C to +125°C	VDD = 2.0V	FOSC = 20 MHz (**PRI_IDLE**mode, EC oscillator)
D020A		1.8	2.5	mA	-40°C to +125°C	VDD = 3.0V	
D021		5.6	7.0	mA	-40°C to +85°C	VDD = 3.0V	FOSC = 64 MHz (**PRI_IDLE**mode, EC oscillator)

Note 1: The supply current is mainly a function of operating voltage, frequency and mode. Other factors, such as I/O pin loading and switching rate, oscillator type and circuit, internal code execution pattern and temperature, also have an impact on the current consumption.

2: The test conditions for all IDD measurements in active operation mode are:
All I/O pins set as outputs driven to Vss;
$\overline{MCLR}$ = VDD;
OSC1 = external square wave, from rail-to-rail (PRI_RUN and PRI_IDLE only).

© 2010 Microchip Technology Inc.

26.7 DC Characteristics: Secondary Oscillator Supply Current, PIC18F2XK20/4XK20

PIC18F2XK20/4XK20		Standard Operating Conditions (unless otherwise stated) Operating temperature -40°C ≤ TA ≤ +125°C					
Param No.	**Device Characteristics**	**Typ**	**Max**	**Units**	**Conditions**		
D022	**Supply Current (I_{DD})(1, 2)**	5.5	9	µA	-40°C	VDD = 1.8V	FOSC = 32 kHz(3) (**SEC_RUN** mode, Timer1 as clock)
		5.5	10	µA	+25°C		
		6.5	14	µA	+85°C		
D022A		10.0	15	µA	-40°C	VDD = 3.0V	
		10.0	16	µA	+25°C		
		11.0	20	µA	+85°C		
D023		2.0	5	µA	-40°C	VDD = 1.8V	FOSC = 32 kHz(3) (**SEC_IDLE** mode, Timer1 as clock)
		2.0	5	µA	+25°C		
		2.5	9	µA	+85°C		
D023A		3.5	8	µA	-40°C	VDD = 3.0V	
		3.5	8	µA	+25°C		
		4.0	12	µA	+85°C		

Note 1: The supply current is mainly a function of operating voltage, frequency and mode. Other factors, such as I/O pin loading and switching rate, oscillator type and circuit, internal code execution pattern and temperature, also have an impact on the current consumption.

2: The test conditions for all IDD measurements in active operation mode are:

All I/O pins set as outputs driven to Vss;

$\overline{MCLR}$ = VDD;

OSC1 = external square wave, from rail-to-rail (PRI_RUN and PRI_IDLE only).

3: Low-Power mode on T1 osc. Low-Power mode is limited to 85°C.

26.8 DC Characteristics: Peripheral Supply Current, PIC18F2XK20/4XK20

PIC18F2XK20/4XK20		Standard Operating Conditions (unless otherwise stated) Operating temperature -40°C ≤ TA ≤ +125°C					
Param No.	**Device Characteristics**	**Typ**	**Max**	**Units**	**Conditions**		
	Module Differential Currents						
D024 (ΔIWDT)	**Watchdog Timer**	0.7	2.0	μA	-40°C to +125°C	VDD = 1.8V	
		1.1	3.0	μA	-40°C to +125°C	VDD = 3.0V	
D024A (ΔIBOR)	**Brown-out Reset(2)**	21	50	μA	-40°C to +125°C	VDD = 2.0V	
		25	60	μA	-40°C to +125°C	VDD = 3.3V	
		0	—	μA	-40°C to +125°C	VDD = 3.3V	Sleep mode, BOREN<1:0> = 10
D024B (ΔIHLVD)	**High/Low-Voltage Detect(2)**	13	30	μA	-40°C to +125°C	VDD = 1.8-3.0V	
D025 (ΔIOSCB) LP	**Timer1 Oscillator**	0.5	2.0	μA	-40°C	VDD = 1.8V	32 kHz on Timer1(1)
		0.5	2.0	μA	+25°C		
		0.7	2.0	μA	+85°C		
		0.7	3.0	μA	-40°C	VDD = 3.0V	32 kHz on Timer1(1)
		0.7	3.0	μA	+25°C		
		0.9	3.0	μA	+85°C		
D025A (ΔIOSCB) HP	**Timer1 Oscillator**	11	30	μA	-40°C	VDD = 1.8V	32 kHz on Timer1(3)
		13	33	μA	+25°C		
		15	35	μA	+85°C		
		14	33	μA	-40°C	VDD = 3.0V	32 kHz on Timer1(3)
		17	37	μA	+25°C		
		19	40	μA	+85°C		
D026 (ΔIAD)	**A/D Converter(4)**	200	290	μA	-40°C to +125°C	VDD = 1.8V	A/D on, not converting
		260	425	μA	-40°C to +125°C	VDD = 3.0V	
ΔIFRC		2	5	μA	-40°C to +125°C	VDD = 1.8V	Adder for FRC
		11	18	μA	-40°C to +125°C	VDD = 3.0V	
D027 (ΔICOMP)	**Comparators**	5	15	μA	-40°C to +125°C	VDD = 1.8-3.0V	LP mode
		40	90	μA	-40°C to +125°C	VDD = 1.8-3.0V	HP mode
D028 (ΔICVREF)	**CVREF**	18	40	μA	-40°C to +125°C	VDD = 1.8V	
		32	60	μA	-40°C to +125°C	VDD = 3.0V	

Note 1: Low-Power mode on T1 osc. Low-Power mode is limited to 85°C.

2: BOR and HLVD enable internal band gap reference. With both modules enabled, current consumption will be less than the sum of both specifications.

3: High-Power mode in T1 osc.

4: A/D converter differential currents apply only in RUN mode. In SLEEP or IDLE mode both the ADC and the FRC turn off as soon as conversion (if any) is complete.

© 2010 Microchip Technology Inc.

26.9 DC Characteristics: Input/Output Characteristics, PIC18F2XK20/4XK20

DC CHARACTERISTICS			Standard Operating Conditions (unless otherwise stated) Operating temperature -40°C ≤ TA ≤ +125°C				
Param No.	**Symbol**	**Characteristic**	**Min**	**Typ†**	**Max**	**Units**	**Conditions**
	VIL	**Input Low Voltage**					
		I/O ports:					
D030		with TTL buffer	VSS	—	0.15 VDD	V	
D031		with Schmitt Trigger	VSS	—	0.2 VDD	V	
D032		$\overline{MCLR}$	VSS	—	0.2 VDD	V	
D033		OSC1	VSS	—	0.3 VDD	V	HS, HSPLL modes
D033A		OSC1	VSS	—	0.2 VDD	V	RC, EC modes(1)
D033B		OSC1	VSS	—	0.3 VDD	V	XT, LP modes
D034		T13CKI	VSS	—	0.3 VDD	V	
	VIH	**Input High Voltage**					
		I/O ports:					
D040		with TTL buffer	0.25 VDD + 0.8V	—	VDD	V	
D041	VIH	with Schmitt Trigger:	0.8 VDD	—	VDD	V	2.4V ≤ VDD ≤ 3.6V
			0.9 VDD	—	VDD	V	VDD < 2.4V
D042	VIH	$\overline{MCLR}$	0.8 VDD	—	VDD	V	2.4V ≤ VDD ≤ 3.6V
			0.9 VDD	—	VDD	V	VDD < 2.4V
D043		OSC1	0.7 VDD	—	VDD	V	HS, HSPLL modes
D043A		OSC1	0.8 VDD	—	VDD	V	EC mode
D043B		OSC1	0.9 VDD	—	VDD	V	RC mode(1)
D043C		OSC1	1.6	—	VDD	V	XT, LP modes
D044		T13CKI	1.6	—	VDD	V	
	IIL	**Input Leakage I/O and $\overline{MCLR}$(2,3)**					VSS ≤ VPIN ≤ VDD, Pin at high-impedance
D060		I/O ports	—	5	50	nA	≤ +25°C
			—	10	100	nA	+60°C
			—	30	200	nA	+85°C
			—	100	1000	nA	+125°C
		Input Leakage RA2					
D061	IIL		—	10	100	nA	≤ +25°C
			—	35	250	nA	+60°C
			—	200	750	nA	+85°C
			—	400	2000	nA	+125°C
		Input Leakage RA3					
D062	IIL		—	10	80	nA	≤ +25°C
			—	25	200	nA	+60°C
			—	70	500	nA	+85°C
			—	300	1500	nA	+125°C

Note 1: In RC oscillator configuration, the OSC1/CLKIN pin is a Schmitt Trigger input. It is not recommended that the PIC® device be driven with an external clock while in RC mode.

2: The leakage current on the $\overline{MCLR}$ pin is strongly dependent on the applied voltage level. The specified levels represent normal operating conditions. Higher leakage current may be measured at different input voltages.

3: Negative current is defined as current sourced by the pin.

4: Parameter is characterized but not tested.

26.9 DC Characteristics: Input/Output Characteristics, PIC18F2XK20/4XK20 (Continued)

DC CHARACTERISTICS			Standard Operating Conditions (unless otherwise stated) Operating temperature -40°C ≤ TA ≤ +125°C				
Param No.	**Symbol**	**Characteristic**	**Min**	**Typ†**	**Max**	**Units**	**Conditions**
	IPU	**Weak Pull-up Current**					
D070	IPURB	PORTB weak pull-up current	50	90	400	μA	VDD = 3.0V, VPIN = VSS

Note 1: In RC oscillator configuration, the OSC1/CLKIN pin is a Schmitt Trigger input. It is not recommended that the PIC® device be driven with an external clock while in RC mode.

2: The leakage current on the $\overline{\text{MCLR}}$ pin is strongly dependent on the applied voltage level. The specified levels represent normal operating conditions. Higher leakage current may be measured at different input voltages.

3: Negative current is defined as current sourced by the pin.

4: Parameter is characterized but not tested.

© 2010 Microchip Technology Inc.

26.9 DC Characteristics: Input/Output Characteristics, PIC18F2XK20/4XK20 (Continued)

DC CHARACTERISTICS			Standard Operating Conditions (unless otherwise stated) Operating temperature -40°C ≤ TA ≤ +125°C				
Param No.	**Symbol**	**Characteristic**	**Min**	**Typ†**	**Max**	**Units**	**Conditions**
	VOL	**Output Low Voltage**					
D080		I/O ports	—	—	0.6	V	IOL = 8.5 mA, VDD = 3.0V, -40°C to +85°C
D083		OSC2/CLKOUT (RC, RCIO, EC, ECIO modes)	—	—	0.6	V	IOL = 1.6 mA, VDD = 3.0V, -40°C to +85°C
	VOH	**Output High Voltage(3)**					
D090		I/O ports	VDD – 0.7	—	—	V	IOH = -3.0 mA, VDD = 3.0V, -40°C to +85°C
D092		OSC2/CLKOUT (RC, RCIO, EC, ECIO modes)	VDD – 0.7	—	—	V	IOH = -1.3 mA, VDD = 3.0V, -40°C to +85°C
		Capacitive Loading Specs on Output Pins					
D100(4)	COSC2	OSC2 pin	—	—	15	pF	In XT, HS and LP modes when external clock is used to drive OSC1
D101	CIO	All I/O pins and OSC2 (in RC mode)	—	—	50	pF	To meet the AC Timing Specifications
D102	CB	SCL, SDA	—	—	400	pF	I^2C™ Specification

Note 1: In RC oscillator configuration, the OSC1/CLKIN pin is a Schmitt Trigger input. It is not recommended that the PIC® device be driven with an external clock while in RC mode.

2: The leakage current on the $\overline{MCLR}$ pin is strongly dependent on the applied voltage level. The specified levels represent normal operating conditions. Higher leakage current may be measured at different input voltages.

3: Negative current is defined as current sourced by the pin.

4: Parameter is characterized but not tested.

26.10 Memory Programming Requirements

DC CHARACTERISTICS			Standard Operating Conditions (unless otherwise stated) Operating temperature -40°C ≤ TA ≤ +125°C				
Param No.	**Sym**	**Characteristic**	**Min**	**Typ†**	**Max**	**Units**	**Conditions**
		Internal Program Memory Programming Specifications(1)					
D110	VPP	Voltage on $\overline{\text{MCLR}}$/VPP/RE3 pin	VDD + 4.5	—	9	V	**(Note 3, Note 4)**
D113	IDDP	Supply Current during Programming	—	—	10	mA	
		Data EEPROM Memory					
D120	ED	Byte Endurance	100K	—	—	E/W	-40°C to +85°C
D121	VDRW	VDD for Read/Write	1.8	—	3.6	V	Using EECON to read/write
D122	TDEW	Erase/Write Cycle Time	—	4	—	ms	
D123	TRETD	Characteristic Retention	40	—	—	Year	Provided no other specifications are violated
D124	TREF	Number of Total Erase/Write Cycles before Refresh(2)	1M	10M	—	E/W	-40°C to +85°C
		Program Flash Memory					
D130	EP	Cell Endurance	10K	—	—	E/W	-40°C to +85°C (**NOTE 5**)
D131	VPR	VDD for Read	1.8	—	3.6	V	
D132	VIW	VDD for Row Erase or Write	2.2	—	3.6	V	
D133	TIW	Self-timed Write Cycle Time	—	2	—	ms	
D134	TRETD	Characteristic Retention	40	—	—	Year	Provided no other specifications are violated

† Data in "Typ" column is at 3.0V, 25°C unless otherwise stated. These parameters are for design guidance only and are not tested.

Note 1: These specifications are for programming the on-chip program memory through the use of table write instructions.

2: Refer to **Section 7.8 "Using the Data EEPROM"** for a more detailed discussion on data EEPROM endurance.

3: Required only if single-supply programming is disabled.

4: The MPLAB ICD 2 does not support variable VPP output. Circuitry to limit the ICD 2 VPP voltage must be placed between the ICD 2 and target system when programming or debugging with the ICD 2.

5: Self-write and Block Erase.

© 2010 Microchip Technology Inc.

26.11 Analog Characteristics

TABLE 26-1: COMPARATOR SPECIFICATIONS

Operating Conditions: 1.8V < V_{DD} < 3.6V, -40°C < T_A < +125°C (unless otherwise stated).							
Param No.	**Sym**	**Characteristics**	**Min**	**Typ**	**Max**	**Units**	**Comments**
CM01	V_{IOFF}	Input Offset Voltage	—	10	50	mV	V_{REF} = V_{DD}/2, High Power Mode
			—	12	80	mV	V_{REF} = V_{DD}/2, Low Power Mode
CM02	V_{ICM}	Input Common-mode Voltage	V_{SS}	—	V_{DD}	V	
CM04	T_{RESP}	Response Time	—	200	400	ns	High Power Mode
			—	300	600	ns	Low Power Mode
CM05	T_{MC2OV}	Comparator Mode Change to Output Valid*	—	—	10	µs	

* These parameters are characterized but not tested.

Note 1: Response time measured with one comparator input at V_{DD}/2, while the other input transitions from V_{SS} to V_{DD}.

TABLE 26-2: CV_{REF} VOLTAGE REFERENCE SPECIFICATIONS

Operating Conditions: 1.8V < V_{DD} < 3.6V, -40°C < T_A < +125°C (unless otherwise stated).							
Param No.	**Sym**	**Characteristics**	**Min**	**Typ**	**Max**	**Units**	**Comments**
CV01*	C_{LSB}	Step Size**(2)**	— —	V_{DD}/24 V_{DD}/32	— —	V V	Low Range (VRR = 1) High Range (VRR = 0)
CV02*	C_{ACC}	Absolute Accuracy	—	—	± 1/2	LSb	
CV03*	C_R	Unit Resistor Value (R)	—	3k	—	Ω	
CV04*	C_{ST}	Settling Time**(1)**	—	7.5	10	µs	

* These parameters are characterized but not tested.

Note 1: Settling time measured while CVRR = 1 and CVR3:CVR0 transitions from '0000' to '1111'.

2: See **Section 21.1 "Comparator Voltage Reference"** for more information.

TABLE 26-3: FIXED VOLTAGE REFERENCE (FVR) SPECIFICATIONS

Operating Conditions: 1.8V < V_{DD} < 3.6V, -40°C < T_A < +125°C (unless otherwise stated).							
VR Voltage Reference Specifications			**Standard Operating Conditions (unless otherwise stated)** Operating temperature -40°C ≤ T_A ≤ +125°C				
Param No.	**Sym**	**Characteristics**	**Min**	**Typ**	**Max**	**Units**	**Comments**
VR01	V_{ROUT}	VR voltage output	1.15	1.20	1.25	V	-40°C to +85°C
			1.10	1.20	1.30	V	+85°C to +125°C
VR02*	TCV_{OUT}	Voltage drift temperature coefficient	—	<50	—	ppm/°C	-40°C to +40°C (See Figure 27-34)
VR03*	$\Delta V_{ROUT}/\Delta V_{DD}$	Voltage drift with respect to V_{DD} regulation	—	<2000	—	µV/V	25°C, 2.0 to 3.3V (See Figure 27-33)
VR04*	T_{STABLE}	Settling Time	—	25	100	µs	0 to 125°C

* These parameters are characterized but not tested.

FIGURE 26-3: HIGH/LOW-VOLTAGE DETECT CHARACTERISTICS

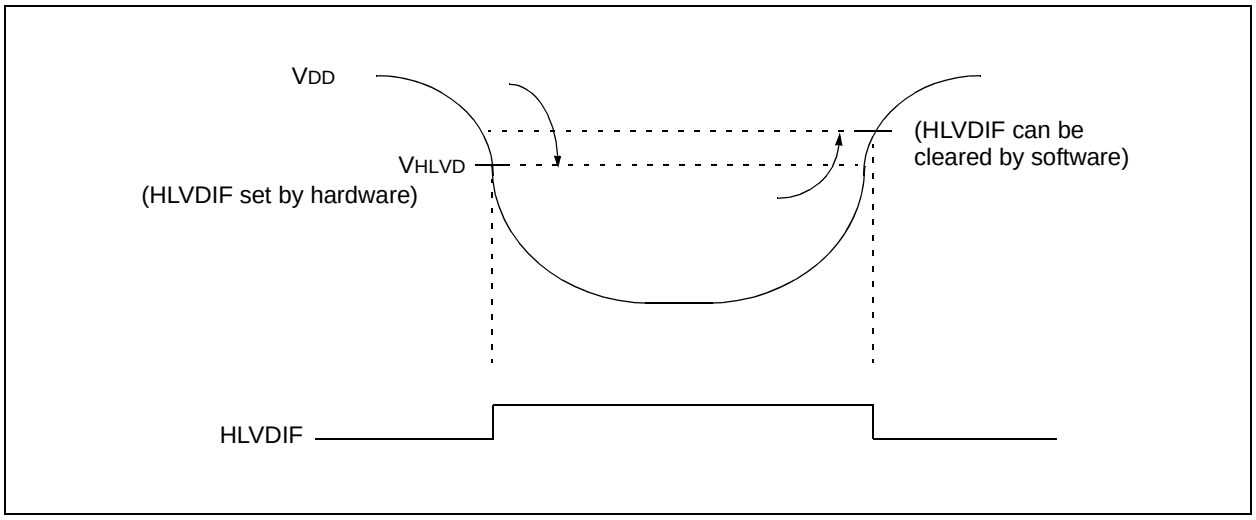

TABLE 26-4: HIGH/LOW-VOLTAGE DETECT CHARACTERISTICS

Standard Operating Conditions (unless otherwise stated) Operating temperature -40°C ≤ TA ≤ +125°C								
Param No.	**Symbol**	**Characteristic**		**Min**	**Typ†**	**Max**	**Units**	**Conditions**
D420		HLVD Voltage on VDD Transition High-to-Low	HLVDL<3:0> = 0000	1.70	1.85	2.00	V	
			HLVDL<3:0> = 0001	1.80	1.95	2.10	V	
			HLVDL<3:0> = 0010	1.91	2.06	2.21	V	
			HLVDL<3:0> = 0011	2.02	2.17	2.32	V	
			HLVDL<3:0> = 0100	2.15	2.30	2.45	V	
			HLVDL<3:0> = 0101	2.22	2.37	2.52	V	
			HLVDL<3:0> = 0110	2.38	2.53	2.68	V	
			HLVDL<3:0> = 0111	2.46	2.61	2.76	V	
			HLVDL<3:0> = 1000	2.55	2.70	2.85	V	
			HLVDL<3:0> = 1001	2.65	2.80	2.95	V	
			HLVDL<3:0> = 1010	2.75	2.90	3.05	V	
			HLVDL<3:0> = 1011	2.87	3.02	3.17	V	
			HLVDL<3:0> = 1100	2.98	3.13	3.28	V	
			HLVDL<3:0> = 1101	3.26	3.41	3.56	V	
			HLVDL<3:0> = 1110	3.42	3.57	3.72	V	

† Production tested at TAMB = 25°C. Specifications over temperature limits ensured by characterization.

© 2010 Microchip Technology Inc.

26.12 AC (Timing) Characteristics

26.12.1 TIMING PARAMETER SYMBOLOGY

The timing parameter symbols have been created using one of the following formats:

1. TppS2ppS
2. TppS
3. TCC:ST (I²C™ specifications only)
4. Ts (I²C specifications only)

T			
F	Frequency	T	Time

Lowercase letters (pp) and their meanings:

pp			
cc	CCP1	osc	OSC1
ck	CLKOUT	rd	$\overline{RD}$
cs	$\overline{CS}$	rw	$\overline{RD}$ or $\overline{WR}$
di	SDI	sc	SCK
do	SDO	ss	$\overline{SS}$
dt	Data in	t0	T0CKI
io	I/O port	t1	T13CKI
mc	$\overline{MCLR}$	wr	$\overline{WR}$

Uppercase letters and their meanings:

S			
F	Fall	P	Period
H	High	R	Rise
I	Invalid (High-impedance)	V	Valid
L	Low	Z	High-impedance
I²C only			
AA	output access	High	High
BUF	Bus free	Low	Low

TCC:ST (I²C specifications only)

CC			
HD	Hold	SU	Setup
ST			
DAT	DATA input hold	STO	Stop condition
STA	Start condition		

26.12.2 TIMING CONDITIONS

The temperature and voltages specified in Table 26-5 apply to all timing specifications unless otherwise noted. Figure 26-4 specifies the load conditions for the timing specifications.

TABLE 26-5: TEMPERATURE AND VOLTAGE SPECIFICATIONS – AC

AC CHARACTERISTICS	**Standard Operating Conditions (unless otherwise stated)** Operating temperature -40°C ≤ TA ≤ +125°C Operating voltage VDD range as described in DC spec **Section 26.1** and **Section 26.9**.

FIGURE 26-4: LOAD CONDITIONS FOR DEVICE TIMING SPECIFICATIONS

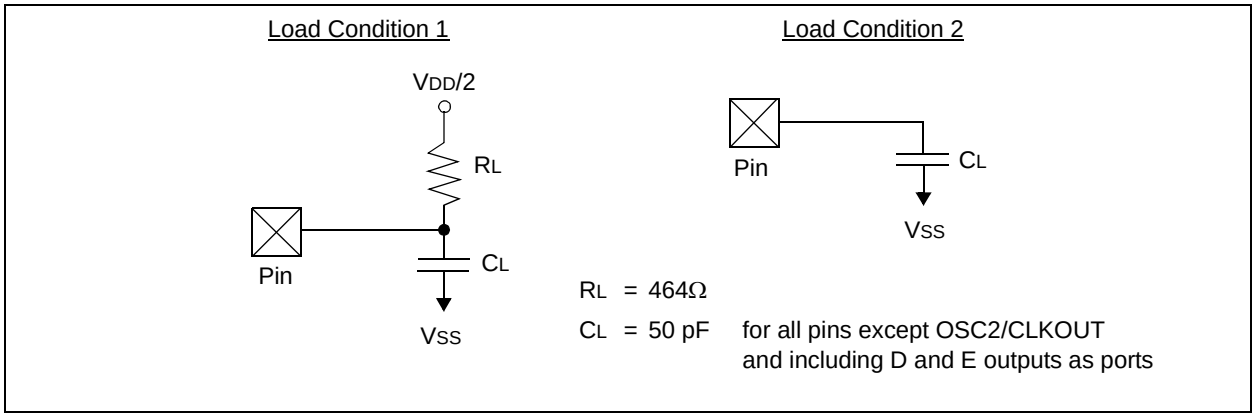

26.12.3 TIMING DIAGRAMS AND SPECIFICATIONS

FIGURE 26-5: EXTERNAL CLOCK TIMING (ALL MODES EXCEPT PLL)

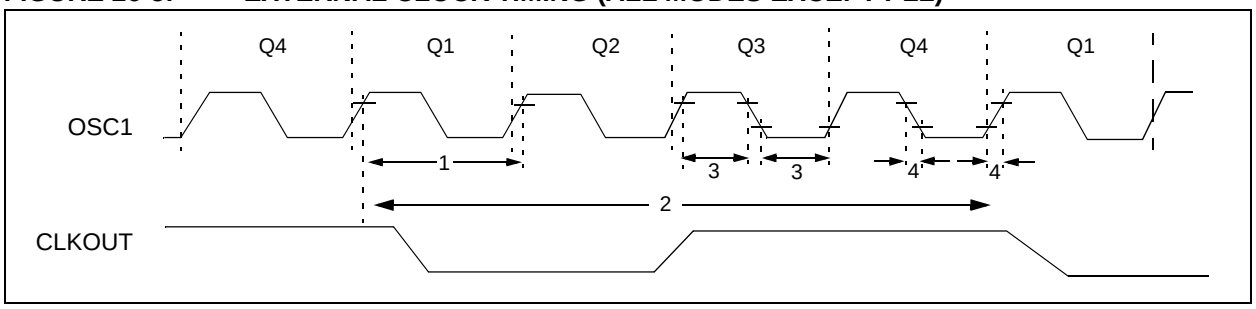

© 2010 Microchip Technology Inc.

TABLE 26-6: EXTERNAL CLOCK TIMING REQUIREMENTS

Param. No.	Symbol	Characteristic	Min	Max	Units	Conditions
1A	FOSC	External CLKIN Frequency(1)	DC	48	MHz	EC, ECIO Oscillator mode, (Extended Range Devices)
			DC	64	MHz	EC, ECIO Oscillator mode, (Industrial Range Devices)
		Oscillator Frequency(1)	DC	4	MHz	RC Oscillator mode
			0.1	4	MHz	XT Oscillator mode
			4	25	MHz	HS Oscillator mode
			4	16	MHz	HS + PLL Oscillator mode, (Industrial Range Devices)
			4	12	MHz	HS + PLL Oscillator mode, (Extended Range Devices)
			5	200	kHz	LP Oscillator mode
1	TOSC	External CLKIN Period(1)	20.8	—	ns	EC, ECIO, Oscillator mode (Extended Range Devices)
			15.6	—	ns	EC, ECIO, Oscillator mode, (Industrial Range Devices)
		Oscillator Period(1)	250	—	ns	RC Oscillator mode
			250	10,000	ns	XT Oscillator mode
			40	250	ns	HS Oscillator mode
			62.5	250	ns	HS + PLL Oscillator mode, (Industrial range devices)
			83.3	250	ns	HS + PLL Oscillator mode, (Extended Range Devices)
			5	200	μs	LP Oscillator mode
2	TCY	Instruction Cycle Time(1)	62.5	—	ns	TCY = 4/FOSC
3	TOSL, TOSH	External Clock in (OSC1) High or Low Time	30	—	ns	XT Oscillator mode
			2.5	—	μs	LP Oscillator mode
			10	—	ns	HS Oscillator mode
4	TOSR, TOSF	External Clock in (OSC1) Rise or Fall Time	—	20	ns	XT Oscillator mode
			—	50	ns	LP Oscillator mode
			—	7.5	ns	HS Oscillator mode

Note 1: Instruction cycle period (TCY) equals four times the input oscillator time base period for all configurations except PLL. All specified values are based on characterization data for that particular oscillator type under standard operating conditions with the device executing code. Exceeding these specified limits may result in an unstable oscillator operation and/or higher than expected current consumption. All devices are tested to operate at “min.” values with an external clock applied to the OSC1/CLKIN pin. When an external clock input is used, the “max.” cycle time limit is “DC” (no clock) for all devices.

TABLE 26-7: PLL CLOCK TIMING SPECIFICATIONS (V_{DD} = 1.8V TO 3.6V)

Param No.	Sym	Characteristic	Min	Typ†	Max	Units	Conditions
F10	FOSC	Oscillator Frequency Range	4	—	4	MHz	VDD = 1.8-2.0V
			4	—	5	MHz	VDD = 2.0-3.0V
			4	—	16	MHz	VDD = 3.0-3.6V, Industrial Range Devices
			4	—	12	MHz	VDD = 3.0-3.6V, Extended Range Devices
F11	FSYS	On-Chip VCO System Frequency	16	—	16	MHz	VDD = 1.8-2.0V
			16	—	20	MHz	VDD = 2.0-3.0V
			16	—	64	MHz	VDD = 3.0-3.6V, Industrial Range Devices
			16	—	48	MHz	VDD = 3.0-3.6V, Extended Range Devices
F12	t_{rc}	PLL Start-up Time (Lock Time)	—	—	2	ms	
F13	ΔCLK	CLKOUT Stability (Jitter)	-2	—	+2	%	

TABLE 26-8: AC CHARACTERISTICS: INTERNAL OSCILLATORS ACCURACY PIC18F2XK20/4XK20

PIC18F2XK20/4XK20		Standard Operating Conditions (unless otherwise stated) Operating temperature -40°C ≤ TA ≤ +125°C					
Param No.		**Min**	**Typ**	**Max**	**Units**	**Conditions**	
OA1	**HFINTOSC Accuracy @ Freq = 16 MHz, 8 MHz, 4 MHz, 2 MHz, 1 MHz, 500 kHz, 250 kHz(1)**						
		-2	0	+2	%	+0°C to +70°C	VDD = 1.8-3.6V
		-3	—	+2	%	+70°C to +85°C	VDD = 1.8-3.6V
		-5	—	+5	%	-40°C to 0°C and +85°C to 125°C	VDD = 1.8-3.6V
OA2	**LFINTOSC Accuracy @ Freq = 31.25 kHz**						
		-15	—	+15	%	-40°C to +125°C	VDD = 1.8-3.6V

Note 1: Frequency calibrated at 25°C. OSCTUNE register can be used to compensate for temperature drift.

© 2010 Microchip Technology Inc.

FIGURE 26-6: CLKOUT AND I/O TIMING

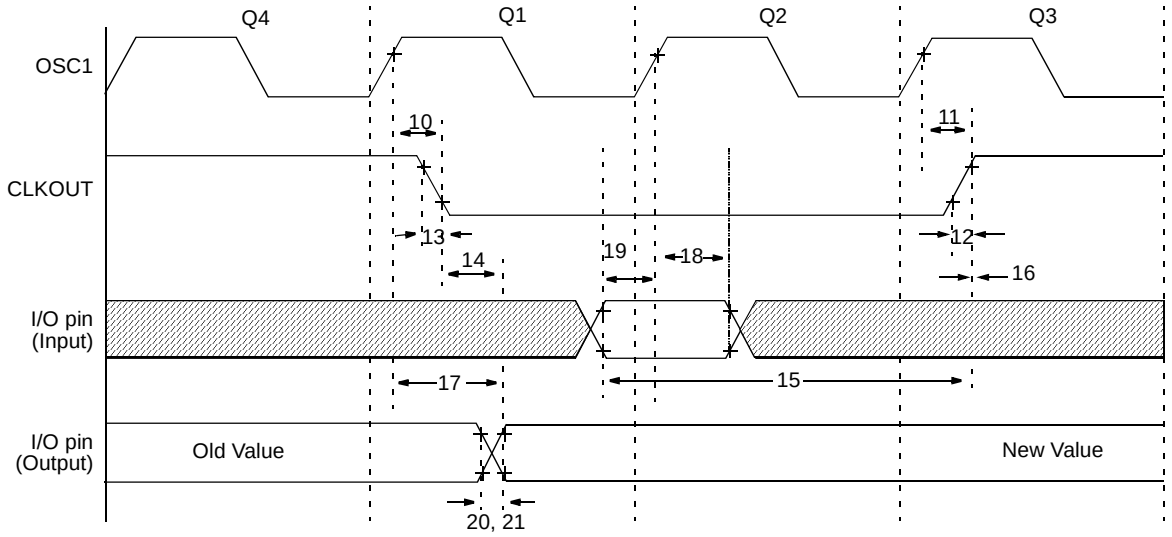

Note: Refer to Figure 26-4 for load conditions.

TABLE 26-9: CLKOUT AND I/O TIMING REQUIREMENTS

Param No.	Symbol	Characteristic	Min	Typ	Max	Units	Conditions
10	TosH2ckL	OSC1 ↑ to CLKOUT ↓	—	75	200	ns	**(Note 1)**
11	TosH2ckH	OSC1 ↑ to CLKOUT ↑	—	75	200	ns	**(Note 1)**
12	TckR	CLKOUT Rise Time	—	35	100	ns	**(Note 1)**
13	TckF	CLKOUT Fall Time	—	35	100	ns	**(Note 1)**
14	TckL2ioV	CLKOUT ↓ to Port Out Valid	—	—	0.5 TCY + 20	ns	**(Note 1)**
15	TioV2ckH	Port In Valid before CLKOUT ↑	0.25 TCY + 25	—	—	ns	**(Note 1)**
16	TckH2ioI	Port In Hold after CLKOUT ↑	0	—	—	ns	**(Note 1)**
17	TosH2ioV	OSC1 ↑ (Q1 cycle) to Port Out Valid	—	50	150	ns	
18	TosH2ioI	OSC1 ↑ (Q2 cycle) to Port Input Invalid (I/O in hold time)	100	—	—	ns	
19	TioV2osH	Port Input Valid to OSC1 ↑ (I/O in setup time)	0	—	—	ns	
20	TioR	Port Output Rise Time	—	10	25	ns	
21	TioF	Port Output Fall Time	—	10	25	ns	
22†	TINP	INTx pin High or Low Time	20	—	—	ns	
23†	TRBP	RB<7:4> Change KBIx High or Low Time	TCY	—	—	ns	

† These parameters are asynchronous events not related to any internal clock edges.

Note 1: Measurements are taken in RC mode, where CLKOUT output is 4 x TOSC.

FIGURE 26-7: RESET, WATCHDOG TIMER, OSCILLATOR START-UP TIMER AND POWER-UP TIMER TIMING

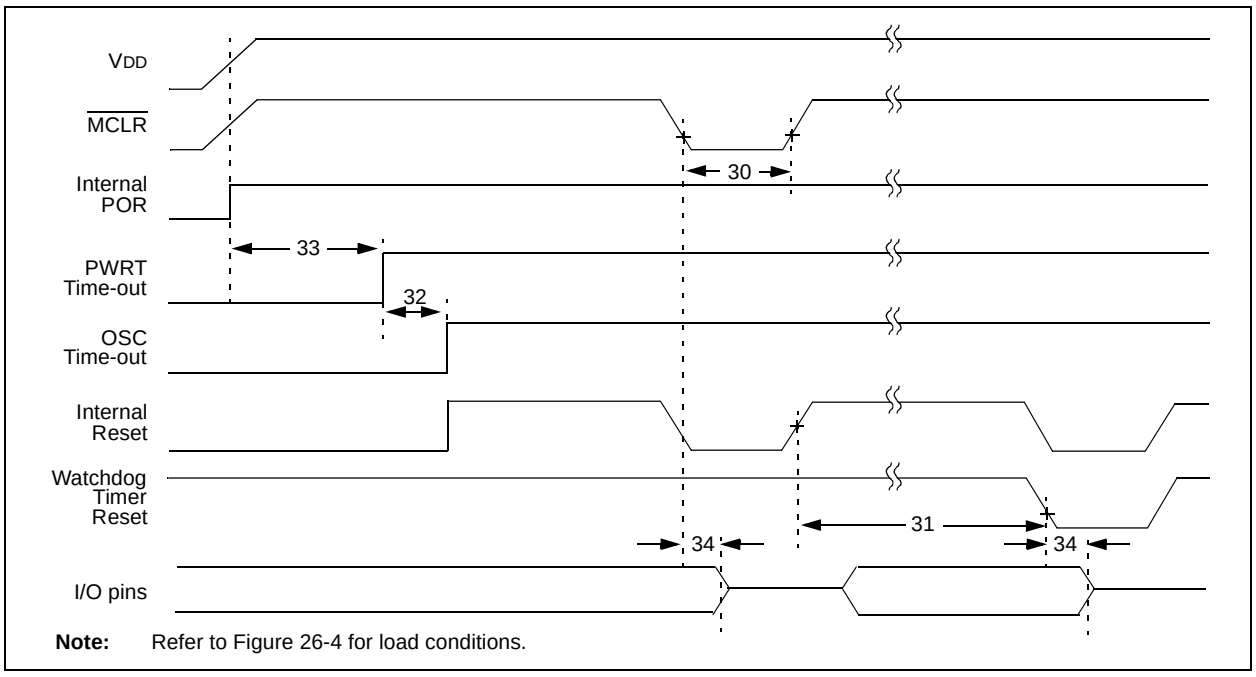

Note: Refer to Figure 26-4 for load conditions.

FIGURE 26-8: BROWN-OUT RESET TIMING

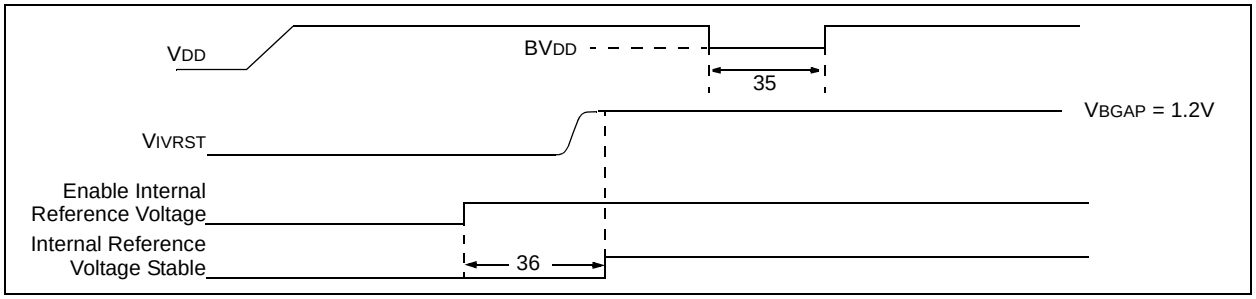

TABLE 26-10: RESET, WATCHDOG TIMER, OSCILLATOR START-UP TIMER, POWER-UP TIMER AND BROWN-OUT RESET REQUIREMENTS

Param. No.	Symbol	Characteristic	Min	Typ	Max	Units	Conditions
30	TmcL	$\overline{\text{MCLR}}$ Pulse Width (low)	2	—	—	µs	
31	TWDT	Watchdog Timer Time-out Period (no postscaler)	3.5	4.1	4.7	ms	1:1 prescaler
32	TOST	Oscillation Start-up Timer Period	1024 TOSC	—	1024 TOSC	—	TOSC = OSC1 period
33	TPWRT	Power-up Timer Period	54.8	64.4	74.1	ms	
34	TIOZ	I/O High-Impedance from $\overline{\text{MCLR}}$ Low or Watchdog Timer Reset	—	2	—	µs	
35	TBOR	Brown-out Reset Pulse Width	200	—	—	µs	VDD ≤ BVDD (see D005)
36	TIVRST	Internal Reference Voltage Stable	—	25	35	µs	
37	THLVD	High/Low-Voltage Detect Pulse Width	200	—	—	µs	VDD ≤ VHLVD
38	TCSD	CPU Start-up Time	5	—	10	µs	
39	TIOBST	Time for HF-INTOSC to Stabilize	—	0.25	1	ms	

© 2010 Microchip Technology Inc.

FIGURE 26-9: TIMER0 AND TIMER1 EXTERNAL CLOCK TIMINGS

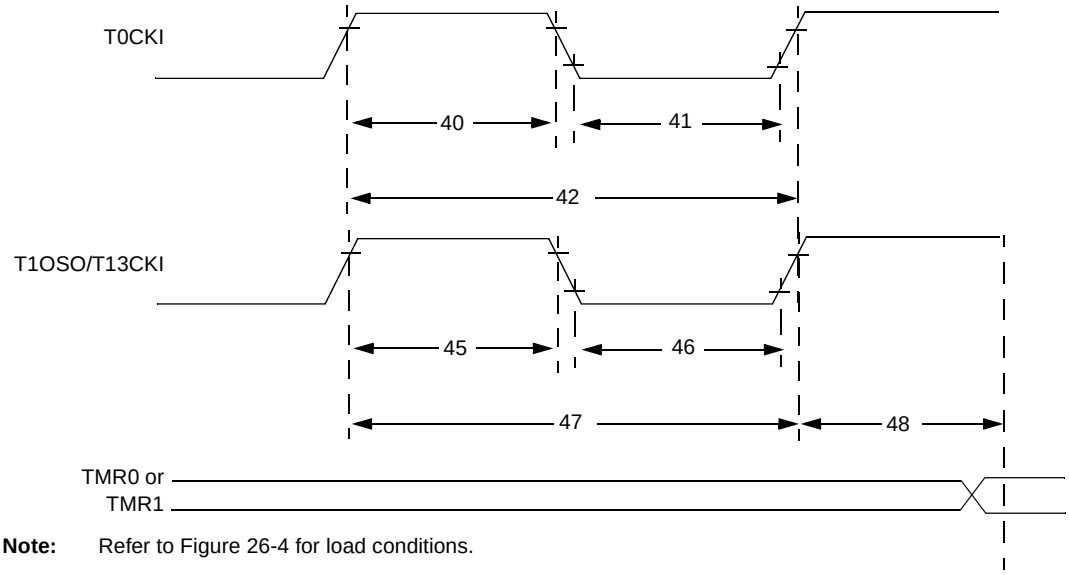

Note: Refer to Figure 26-4 for load conditions.

TABLE 26-11: TIMER0 AND TIMER1 EXTERNAL CLOCK REQUIREMENTS

Param No.	Symbol	Characteristic			Min	Max	Units	Conditions
40	Tt0H	T0CKI High Pulse Width		No prescaler	0.5 TCY + 20	—	ns	
				With prescaler	10	—	ns	
41	Tt0L	T0CKI Low Pulse Width		No prescaler	0.5 TCY + 20	—	ns	
				With prescaler	10	—	ns	
42	Tt0P	T0CKI Period		No prescaler	TCY + 10	—	ns	
				With prescaler	Greater of: 20 ns or (TCY + 40)/N	—	ns	N = prescale value (1, 2, 4,..., 256)
45	Tt1H	T13CKI High Time	Synchronous, no prescaler		0.5 TCY + 20	—	ns	
			Synchronous, with prescaler		10	—	ns	
			Asynchronous		30	—	ns	
46	Tt1L	T13CKI Low Time	Synchronous, no prescaler		0.5 TCY + 5	—	ns	
			Synchronous, with prescaler		10	—	ns	
			Asynchronous		30	—	ns	
47	Tt1P	T13CKI Input Period	Synchronous		Greater of: 20 ns or (TCY + 40)/N	—	ns	N = prescale value (1, 2, 4, 8)
			Asynchronous		60	—	ns	
	Ft1	T13CKI Clock Input Frequency Range			DC	50	kHz	
48	Tcke2tmrI	Delay from External T13CKI Clock Edge to Timer Increment			2 TOSC	7 TOSC	—	

FIGURE 26-10: CAPTURE/COMPARE/PWM TIMINGS (ALL CCP MODULES)

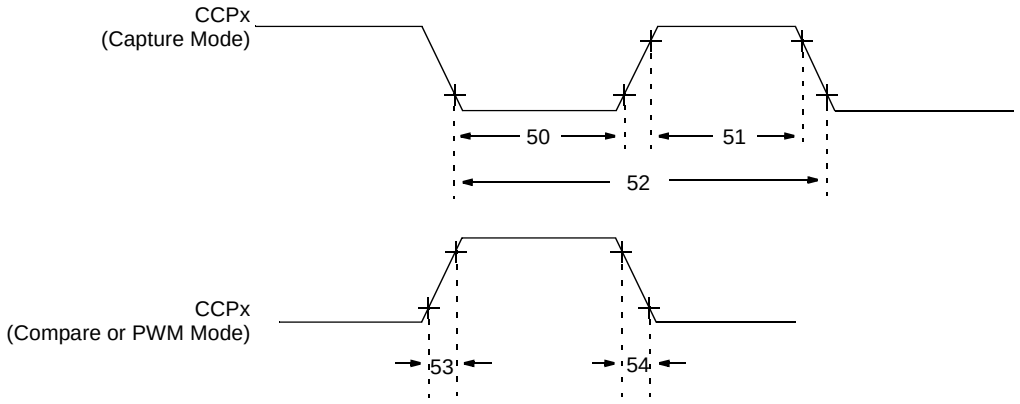

Note: Refer to Figure 26-4 for load conditions.

TABLE 26-12: CAPTURE/COMPARE/PWM REQUIREMENTS (ALL CCP MODULES)

Param No.	Symbol	Characteristic		Min	Max	Units	Conditions
50	TccL	CCPx Input Low Time	No prescaler	0.5 TCY + 20	—	ns	
			With prescaler	10	—	ns	
51	TccH	CCPx Input High Time	No prescaler	0.5 TCY + 20	—	ns	
			With prescaler	10	—	ns	
52	TccP	CCPx Input Period		$\frac{3\ T_{CY} + 40}{N}$	—	ns	N = prescale value (1, 4 or 16)
53	TccR	CCPx Output Fall Time		—	25	ns	
54	TccF	CCPx Output Fall Time		—	25	ns	

© 2010 Microchip Technology Inc.

FIGURE 26-11: PARALLEL SLAVE PORT TIMING (PIC18F4XK20)

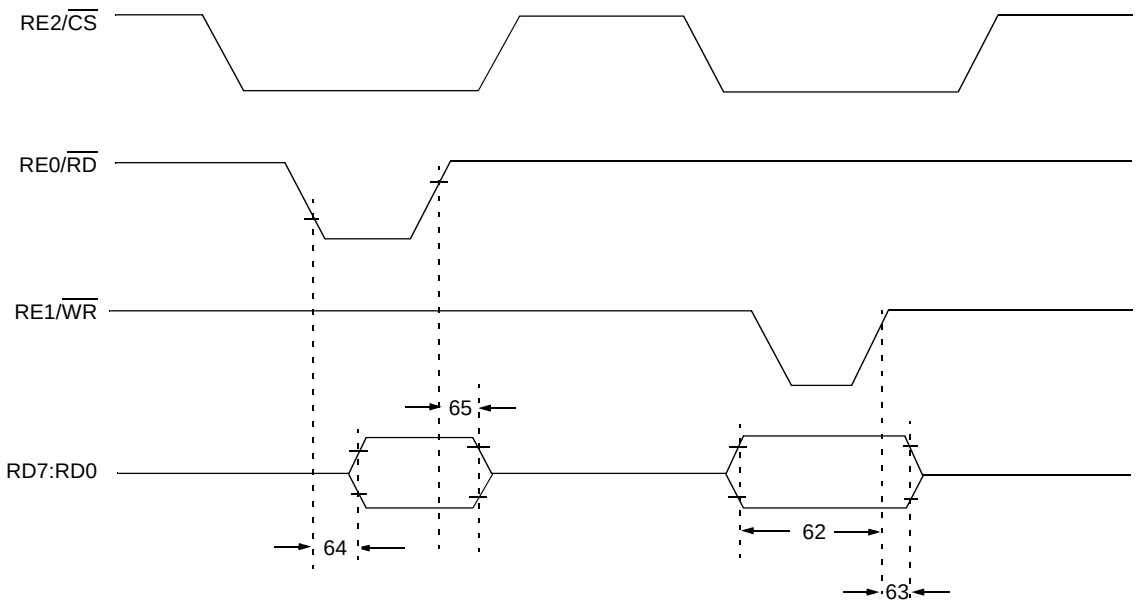

Note: Refer to Figure 26-4 for load conditions.

TABLE 26-13: PARALLEL SLAVE PORT REQUIREMENTS (PIC18F4XK20)

Param. No.	Symbol	Characteristic	Min	Max	Units	Conditions
62	TdtV2wrH	Data In Valid before $\overline{WR}$ ↑ or $\overline{CS}$ ↑ (setup time)	20	—	ns	
63	TwrH2dtI	$\overline{WR}$ ↑ or $\overline{CS}$ ↑ to Data–In Invalid (hold time)	20	—	ns	
64	TrdL2dtV	$\overline{RD}$ ↓ and $\overline{CS}$ ↓ to Data–Out Valid	—	80	ns	
65	TrdH2dtI	$\overline{RD}$ ↑ or $\overline{CS}$ ↓ to Data–Out Invalid	10	30	ns	
66	TibfINH	Inhibit of the IBF Flag bit being Cleared from $\overline{WR}$ ↑ or $\overline{CS}$ ↑	—	3 TCY		

FIGURE 26-12: EXAMPLE SPI MASTER MODE TIMING (CKE = 0)

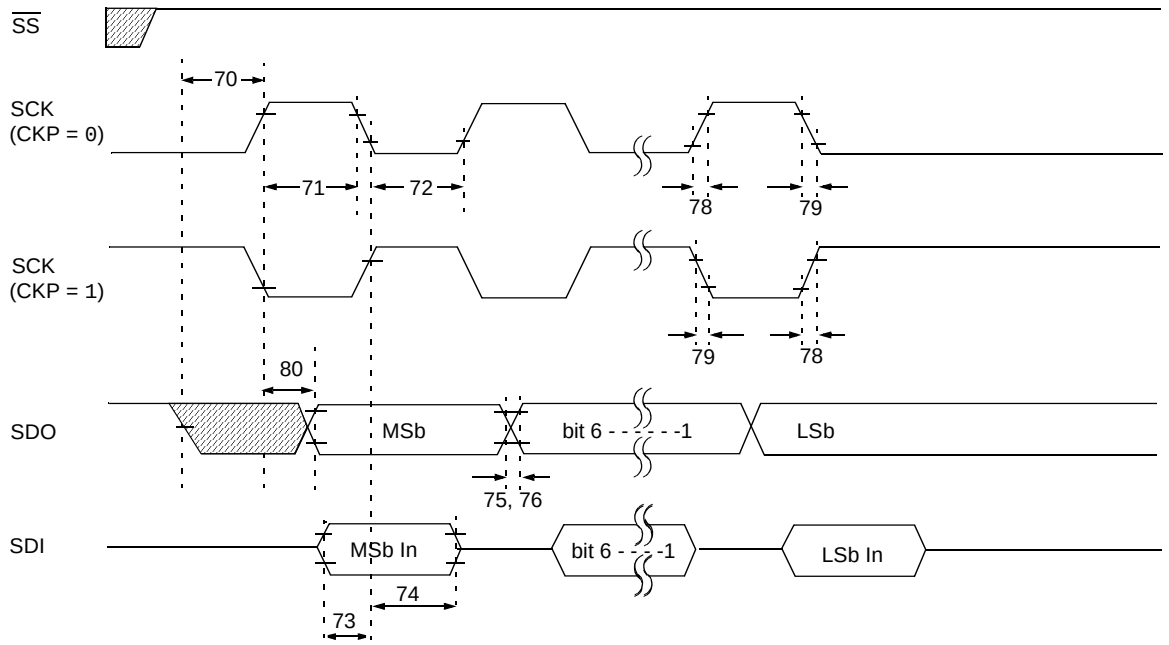

Note: Refer to Figure 26-4 for load conditions.

TABLE 26-14: EXAMPLE SPI MODE REQUIREMENTS (MASTER MODE, CKE = 0)

Param No.	Symbol	Characteristic		Min	Max	Units	Conditions
70	TssL2scH, TssL2scL	$\overline{SS}$ ↓ to SCK ↓ or SCK ↑ Input		TCY	—	ns	
71	TscH	SCK Input High Time (Slave mode)	Continuous	1.25 TCY + 30	—	ns	
71A			Single Byte	40	—	ns	**(Note 1)**
72	TscL	SCK Input Low Time (Slave mode)	Continuous	1.25 TCY + 30	—	ns	
72A			Single Byte	40	—	ns	**(Note 1)**
73	TdiV2scH, TdiV2scL	Setup Time of SDI Data Input to SCK Edge		100	—	ns	
73A	Tb2b	Last Clock Edge of Byte 1 to the 1st Clock Edge of Byte 2		1.5 TCY + 40	—	ns	**(Note 2)**
74	TscH2diL, TscL2diL	Hold Time of SDI Data Input to SCK Edge		100	—	ns	
75	TdoR	SDO Data Output Rise Time		—	25	ns	
76	TdoF	SDO Data Output Fall Time		—	25	ns	
78	TscR	SCK Output Rise Time (Master mode)		—	25	ns	
79	TscF	SCK Output Fall Time (Master mode)		—	25	ns	
80	TscH2doV, TscL2doV	SDO Data Output Valid after SCK Edge		—	50	ns	

Note 1: Requires the use of Parameter #73A.

2: Only if Parameter #71A and #72A are used.

© 2010 Microchip Technology Inc.

FIGURE 26-13: EXAMPLE SPI MASTER MODE TIMING (CKE = 1)

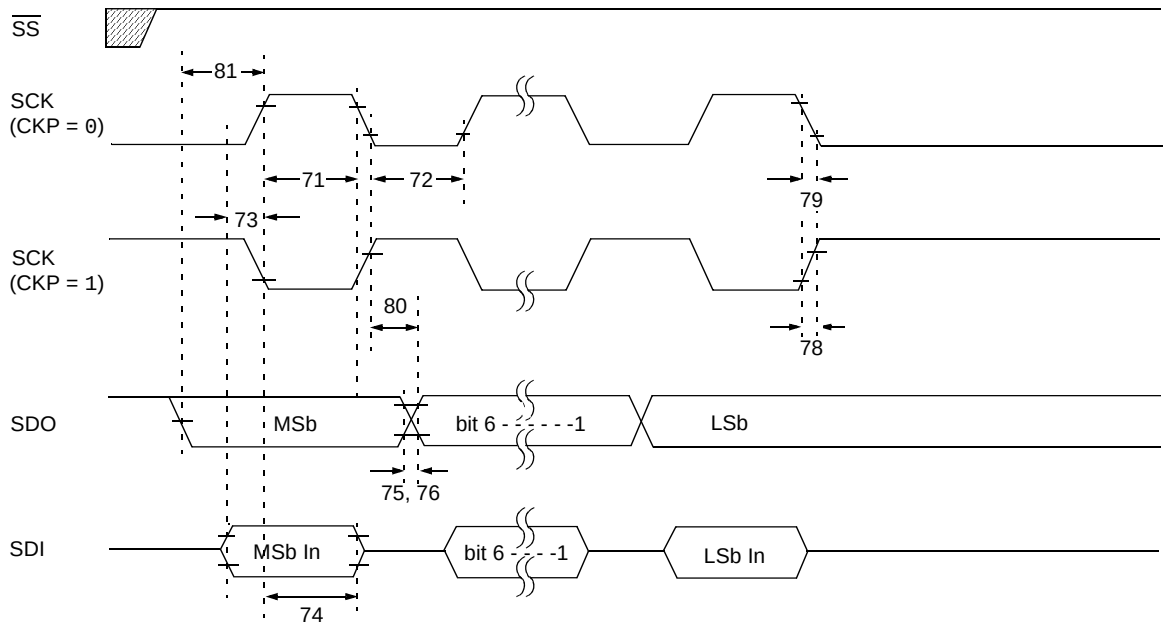

Note: Refer to Figure 26-4 for load conditions.

TABLE 26-15: EXAMPLE SPI MODE REQUIREMENTS (MASTER MODE, CKE = 1)

Param. No.	Symbol	Characteristic		Min	Max	Units	Conditions
71	TscH	SCK Input High Time (Slave mode)	Continuous	1.25 TCY + 30	—	ns	
71A			Single Byte	40	—	ns	**(Note 1)**
72	TscL	SCK Input Low Time (Slave mode)	Continuous	1.25 TCY + 30	—	ns	
72A			Single Byte	40	—	ns	**(Note 1)**
73	TdiV2scH, TdiV2scL	Setup Time of SDI Data Input to SCK Edge		100	—	ns	
73A	Tb2b	Last Clock Edge of Byte 1 to the 1st Clock Edge of Byte 2		1.5 TCY + 40	—	ns	**(Note 2)**
74	TscH2diL, TscL2diL	Hold Time of SDI Data Input to SCK Edge		100	—	ns	
75	TdoR	SDO Data Output Rise Time		—	25	ns	
76	TdoF	SDO Data Output Fall Time		—	25	ns	
78	TscR	SCK Output Rise Time (Master mode)		—	25	ns	
79	TscF	SCK Output Fall Time (Master mode)		—	25	ns	
80	TscH2doV, TscL2doV	SDO Data Output Valid after SCK Edge		—	50	ns	
81	TdoV2scH, TdoV2scL	SDO Data Output Setup to SCK Edge		TCY	—	ns	

Note 1: Requires the use of Parameter #73A.

2: Only if Parameter #71A and #72A are used.

FIGURE 26-14: EXAMPLE SPI SLAVE MODE TIMING (CKE = 0)

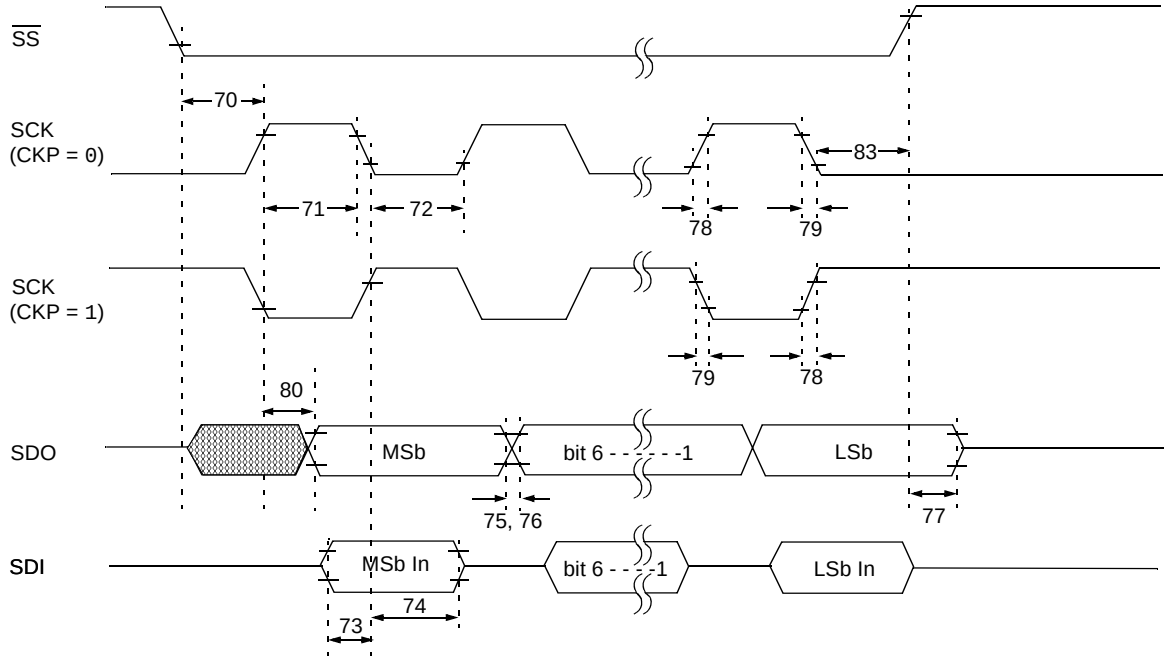

Note: Refer to Figure 26-4 for load conditions.

TABLE 26-16: EXAMPLE SPI MODE REQUIREMENTS (SLAVE MODE TIMING, CKE = 0)

Param No.	Symbol	Characteristic		Min	Max	Units	Conditions
70	TssL2scH, TssL2scL	$\overline{SS}$ ↓ to SCK ↓ or SCK ↑ Input		TCY	—	ns	
71	TscH	SCK Input High Time (Slave mode)	Continuous	1.25 TCY + 30	—	ns	
71A			Single Byte	40	—	ns	**(Note 1)**
72	TscL	SCK Input Low Time (Slave mode)	Continuous	1.25 TCY + 30	—	ns	
72A			Single Byte	40	—	ns	**(Note 1)**
73	TdiV2scH, TdiV2scL	Setup Time of SDI Data Input to SCK Edge		100	—	ns	
73A	Tb2b	Last Clock Edge of Byte 1 to the First Clock Edge of Byte 2		1.5 TCY + 40	—	ns	**(Note 2)**
74	TscH2diL, TscL2diL	Hold Time of SDI Data Input to SCK Edge		100	—	ns	
75	TdoR	SDO Data Output Rise Time		—	25	ns	
76	TdoF	SDO Data Output Fall Time		—	25	ns	
77	TssH2doZ	$\overline{SS}$↑ to SDO Output High-Impedance		10	50	ns	
78	TscR	SCK Output Rise Time (Master mode)		—	25	ns	
79	TscF	SCK Output Fall Time (Master mode)		—	25	ns	
80	TscH2doV, TscL2doV	SDO Data Output Valid after SCK Edge		—	50	ns	
83	TscH2ssH, TscL2ssH	$\overline{SS}$ ↑ after SCK edge		1.5 TCY + 40	—	ns	

Note 1: Requires the use of Parameter #73A.

2: Only if Parameter #71A and #72A are used.

© 2010 Microchip Technology Inc.

FIGURE 26-15: EXAMPLE SPI SLAVE MODE TIMING (CKE = 1)

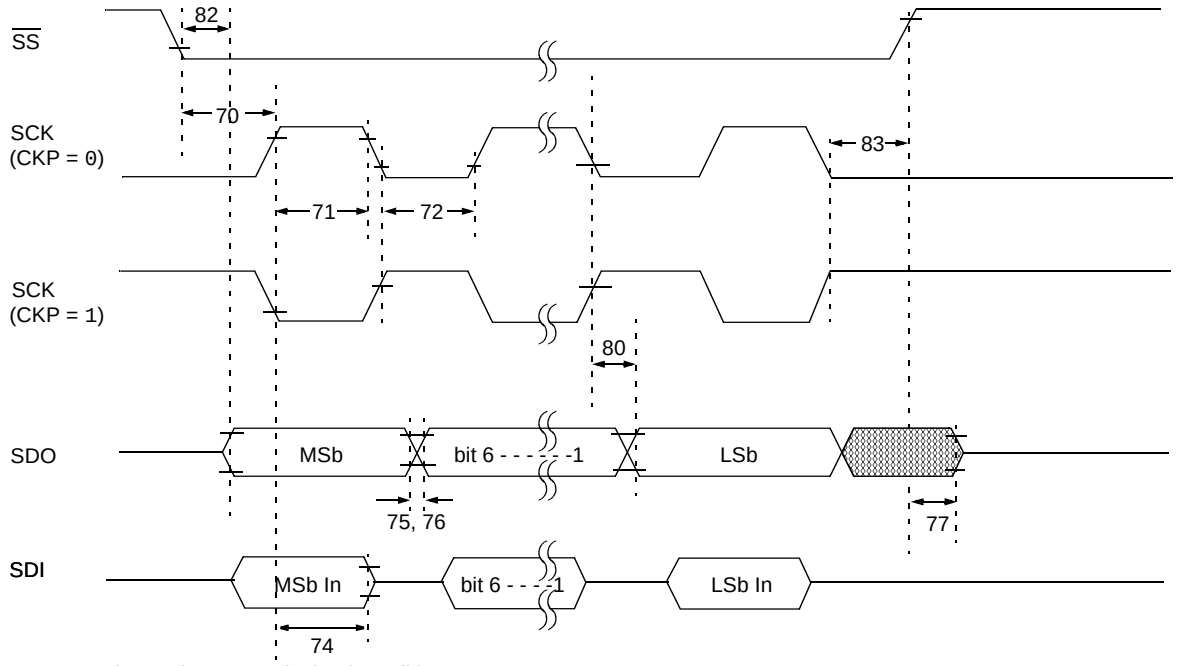

Note: Refer to Figure 26-4 for load conditions.

TABLE 26-17: EXAMPLE SPI SLAVE MODE REQUIREMENTS (CKE = 1)

Param No.	Symbol	Characteristic		Min	Max	Units	Conditions
70	TssL2scH, TssL2scL	$\overline{SS}$ ↓ to SCK ↓ or SCK ↑ Input		TCY	—	ns	
71	TscH	SCK Input High Time (Slave mode)	Continuous	1.25 TCY + 30	—	ns	
71A			Single Byte	40	—	ns	**(Note 1)**
72	TscL	SCK Input Low Time (Slave mode)	Continuous	1.25 TCY + 30	—	ns	
72A			Single Byte	40	—	ns	**(Note 1)**
73A	Tb2b	Last Clock Edge of Byte 1 to the First Clock Edge of Byte 2		1.5 TCY + 40	—	ns	**(Note 2)**
74	TscH2diL, TscL2diL	Hold Time of SDI Data Input to SCK Edge		100	—	ns	
75	TdoR	SDO Data Output Rise Time		—	25	ns	
76	TdoF	SDO Data Output Fall Time		—	25	ns	
77	TssH2doZ	$\overline{SS}$↑ to SDO Output High-Impedance		10	50	ns	
78	TscR	SCK Output Rise Time (Master mode)		—	25	ns	
79	TscF	SCK Output Fall Time (Master mode)		—	25	ns	
80	TscH2doV, TscL2doV	SDO Data Output Valid after SCK Edge		—	50	ns	
82	TssL2doV	SDO Data Output Valid after $\overline{SS}$ ↓ Edge		—	50	ns	
83	TscH2ssH, TscL2ssH	$\overline{SS}$ ↑ after SCK Edge		1.5 TCY + 40	—	ns	

Note 1: Requires the use of Parameter #73A.

2: Only if Parameter #71A and #72A are used.

FIGURE 26-16: I²C™ BUS START/STOP BITS TIMING

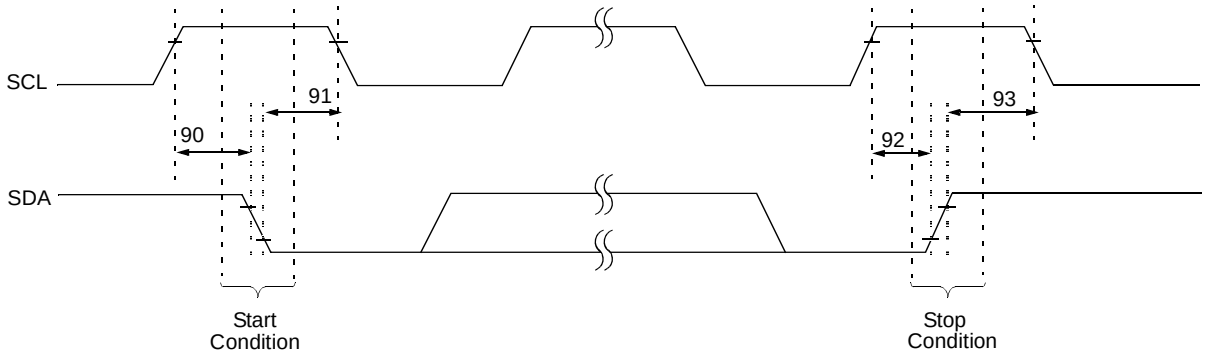

Note: Refer to Figure 26-4 for load conditions.

TABLE 26-18: I²C™ BUS START/STOP BITS REQUIREMENTS (SLAVE MODE)

Param. No.	Symbol	Characteristic		Min	Max	Units	Conditions
90	TSU:STA	Start Condition	100 kHz mode	4700	—	ns	Only relevant for Repeated Start condition
		Setup Time	400 kHz mode	600	—		
91	THD:STA	Start Condition	100 kHz mode	4000	—	ns	After this period, the first clock pulse is generated
		Hold Time	400 kHz mode	600	—		
92	TSU:STO	Stop Condition	100 kHz mode	4700	—	ns	
		Setup Time	400 kHz mode	600	—		
93	THD:STO	Stop Condition	100 kHz mode	4000	—	ns	
		Hold Time	400 kHz mode	600	—		

FIGURE 26-17: I²C™ BUS DATA TIMING

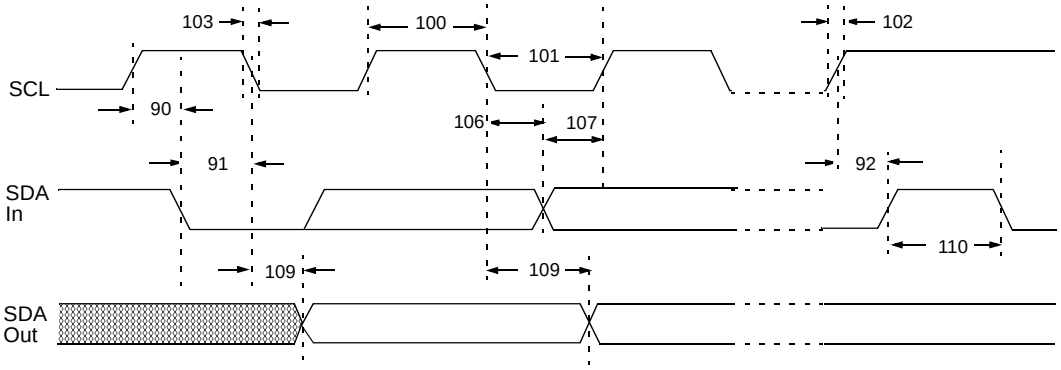

Note: Refer to Figure 26-4 for load conditions.

© 2010 Microchip Technology Inc.

TABLE 26-19: I^2C™ BUS DATA REQUIREMENTS (SLAVE MODE)

Param. No.	Symbol	Characteristic		Min	Max	Units	Conditions
100	THIGH	Clock High Time	100 kHz mode	4.0	—	μs	PIC18FXXXX must operate at a minimum of 1.5 MHz
			400 kHz mode	0.6	—	μs	PIC18FXXXX must operate at a minimum of 10 MHz
			SSP Module	1.5 TCY	—		
101	TLOW	Clock Low Time	100 kHz mode	4.7	—	μs	PIC18FXXXX must operate at a minimum of 1.5 MHz
			400 kHz mode	1.3	—	μs	PIC18FXXXX must operate at a minimum of 10 MHz
			SSP Module	1.5 TCY	—		
102	TR	SDA and SCL Rise Time	100 kHz mode	—	1000	ns	
			400 kHz mode	20 + 0.1 CB	300	ns	CB is specified to be from 10 to 400 pF
103	TF	SDA and SCL Fall Time	100 kHz mode	—	300	ns	
			400 kHz mode	20 + 0.1 CB	300	ns	CB is specified to be from 10 to 400 pF
90	TSU:STA	Start Condition Setup Time	100 kHz mode	4.7	—	μs	Only relevant for Repeated Start condition
			400 kHz mode	0.6	—	μs	
91	THD:STA	Start Condition Hold Time	100 kHz mode	4.0	—	μs	After this period, the first clock pulse is generated
			400 kHz mode	0.6	—	μs	
106	THD:DAT	Data Input Hold Time	100 kHz mode	0	—	ns	
			400 kHz mode	0	0.9	μs	
107	TSU:DAT	Data Input Setup Time	100 kHz mode	250	—	ns	**(Note 2)**
			400 kHz mode	100	—	ns	
92	TSU:STO	Stop Condition Setup Time	100 kHz mode	4.7	—	μs	
			400 kHz mode	0.6	—	μs	
109	TAA	Output Valid from Clock	100 kHz mode	—	3500	ns	**(Note 1)**
			400 kHz mode	—	—	ns	
110	TBUF	Bus Free Time	100 kHz mode	4.7	—	μs	Time the bus must be free before a new transmission can start
			400 kHz mode	1.3	—	μs	
D102	CB	Bus Capacitive Loading		—	400	pF	

Note 1: As a transmitter, the device must provide this internal minimum delay time to bridge the undefined region (min. 300 ns) of the falling edge of SCL to avoid unintended generation of Start or Stop conditions.

2: A fast mode I^2C bus device can be used in a standard mode I^2C bus system but the requirement, $T_{SU:DAT} \geq 250$ ns, must then be met. This will automatically be the case if the device does not stretch the LOW period of the SCL signal. If such a device does stretch the LOW period of the SCL signal, it must output the next data bit to the SDA line, T_R max. + $T_{SU:DAT}$ = 1000 + 250 = 1250 ns (according to the standard mode I^2C bus specification), before the SCL line is released.

FIGURE 26-18: MASTER SSP I²C™ BUS START/STOP BITS TIMING WAVEFORMS

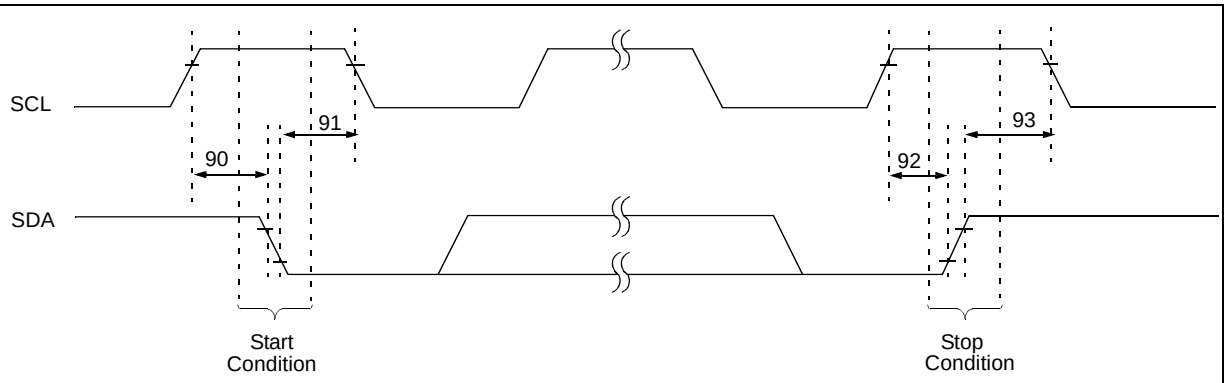

Note: Refer to Figure 26-4 for load conditions.

TABLE 26-20: MASTER SSP I²C™ BUS START/STOP BITS REQUIREMENTS

Param. No.	Symbol	Characteristic		Min	Max	Units	Conditions
90	TSU:STA	Start Condition Setup Time	100 kHz mode	2(TOSC)(BRG + 1)	—	ns	Only relevant for Repeated Start condition
			400 kHz mode	2(TOSC)(BRG + 1)	—		
			1 MHz mode(1)	2(TOSC)(BRG + 1)	—		
91	THD:STA	Start Condition Hold Time	100 kHz mode	2(TOSC)(BRG + 1)	—	ns	After this period, the first clock pulse is generated
			400 kHz mode	2(TOSC)(BRG + 1)	—		
			1 MHz mode(1)	2(TOSC)(BRG + 1)	—		
92	TSU:STO	Stop Condition Setup Time	100 kHz mode	2(TOSC)(BRG + 1)	—	ns	
			400 kHz mode	2(TOSC)(BRG + 1)	—		
			1 MHz mode(1)	2(TOSC)(BRG + 1)	—		
93	THD:STO	Stop Condition Hold Time	100 kHz mode	2(TOSC)(BRG + 1)	—	ns	
			400 kHz mode	2(TOSC)(BRG + 1)	—		
			1 MHz mode(1)	2(TOSC)(BRG + 1)	—		

Note 1: Maximum pin capacitance = 10 pF for all I²C pins.

FIGURE 26-19: MASTER SSP I²C™ BUS DATA TIMING

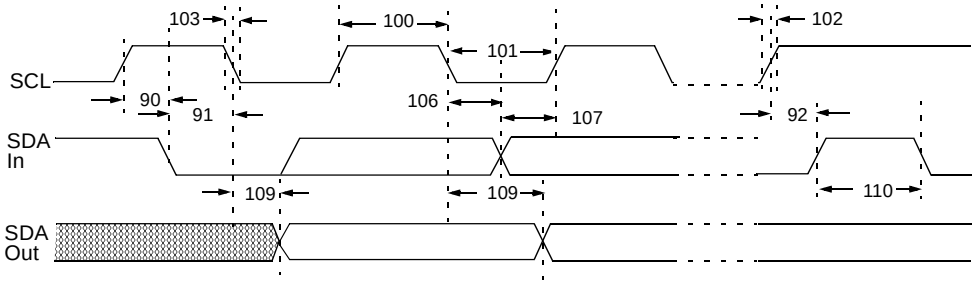

Note: Refer to Figure 26-4 for load conditions.

© 2010 Microchip Technology Inc.

TABLE 26-21: MASTER SSP I²C™ BUS DATA REQUIREMENTS

Param. No.	Symbol	Characteristic		Min	Max	Units	Conditions
100	THIGH	Clock High Time	100 kHz mode	2(TOSC)(BRG + 1)	—	ms	
			400 kHz mode	2(TOSC)(BRG + 1)	—	ms	
			1 MHz mode(1)	2(TOSC)(BRG + 1)	—	ms	
101	TLOW	Clock Low Time	100 kHz mode	2(TOSC)(BRG + 1)	—	ms	
			400 kHz mode	2(TOSC)(BRG + 1)	—	ms	
			1 MHz mode(1)	2(TOSC)(BRG + 1)	—	ms	
102	TR	SDA and SCL Rise Time	100 kHz mode	—	1000	ns	CB is specified to be from 10 to 400 pF
			400 kHz mode	20 + 0.1 CB	300	ns	
			1 MHz mode(1)	—	300	ns	
103	TF	SDA and SCL Fall Time	100 kHz mode	—	300	ns	CB is specified to be from 10 to 400 pF
			400 kHz mode	20 + 0.1 CB	300	ns	
			1 MHz mode(1)	—	100	ns	
90	TSU:STA	Start Condition Setup Time	100 kHz mode	2(TOSC)(BRG + 1)	—	ms	Only relevant for Repeated Start condition
			400 kHz mode	2(TOSC)(BRG + 1)	—	ms	
			1 MHz mode(1)	2(TOSC)(BRG + 1)	—	ms	
91	THD:STA	Start Condition Hold Time	100 kHz mode	2(TOSC)(BRG + 1)	—	ms	After this period, the first clock pulse is generated
			400 kHz mode	2(TOSC)(BRG + 1)	—	ms	
			1 MHz mode(1)	2(TOSC)(BRG + 1)	—	ms	
106	THD:DAT	Data Input Hold Time	100 kHz mode	0	—	ns	
			400 kHz mode	0	0.9	ms	
107	TSU:DAT	Data Input Setup Time	100 kHz mode	250	—	ns	**(Note 2)**
			400 kHz mode	100	—	ns	
92	TSU:STO	Stop Condition Setup Time	100 kHz mode	2(TOSC)(BRG + 1)	—	ms	
			400 kHz mode	2(TOSC)(BRG + 1)	—	ms	
			1 MHz mode(1)	2(TOSC)(BRG + 1)	—	ms	
109	TAA	Output Valid from Clock	100 kHz mode	—	3500	ns	
			400 kHz mode	—	1000	ns	
			1 MHz mode(1)	—	—	ns	
110	TBUF	Bus Free Time	100 kHz mode	4.7	—	ms	Time the bus must be free before a new transmission can start
			400 kHz mode	1.3	—	ms	
D102	CB	Bus Capacitive Loading		—	400	pF	

Note 1: Maximum pin capacitance = 10 pF for all I²C pins.

2: A fast mode I²C bus device can be used in a standard mode I²C bus system, but parameter 107 ≥ 250 ns must then be met. This will automatically be the case if the device does not stretch the LOW period of the SCL signal. If such a device does stretch the LOW period of the SCL signal, it must output the next data bit to the SDA line, parameter 102 + parameter 107 = 1000 + 250 = 1250 ns (for 100 kHz mode), before the SCL line is released.

FIGURE 26-20: EUSART SYNCHRONOUS TRANSMISSION (MASTER/SLAVE) TIMING

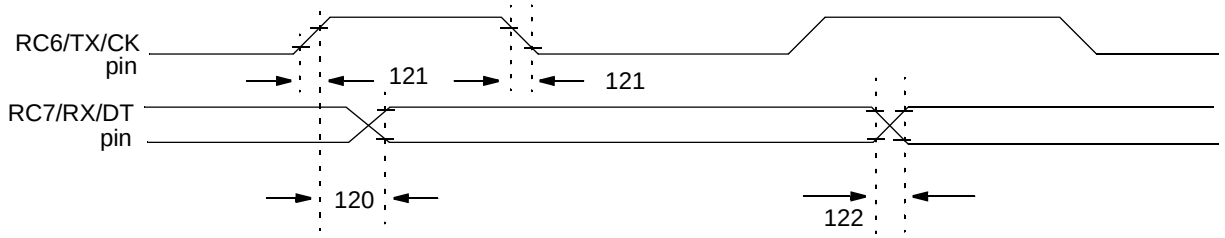

Note: Refer to Figure 26-4 for load conditions.

TABLE 26-22: EUSART SYNCHRONOUS TRANSMISSION REQUIREMENTS

Param No.	Symbol	Characteristic	Min	Max	Units	Conditions
120	TckH2dtV	SYNC XMIT (MASTER & SLAVE) Clock High to Data Out Valid	—	40	ns	
121	Tckrf	Clock Out Rise Time and Fall Time (Master mode)	—	20	ns	
122	Tdtrf	Data Out Rise Time and Fall Time	—	20	ns	

FIGURE 26-21: EUSART SYNCHRONOUS RECEIVE (MASTER/SLAVE) TIMING

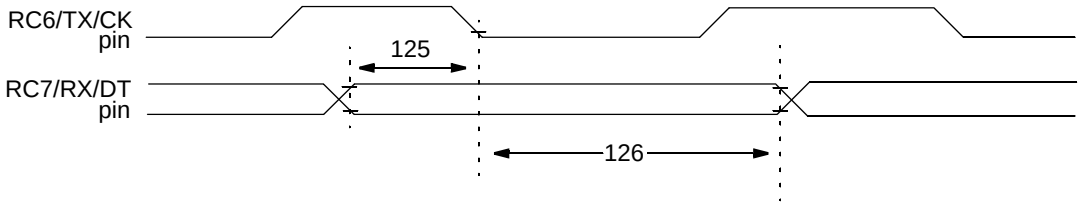

Note: Refer to Figure 26-4 for load conditions.

TABLE 26-23: EUSART SYNCHRONOUS RECEIVE REQUIREMENTS

Param. No.	Symbol	Characteristic	Min	Max	Units	Conditions
125	TdtV2ckl	SYNC RCV (MASTER & SLAVE) Data Setup before CK ↓ (DT setup time)	10	—	ns	
126	TckL2dtl	Data Hold after CK ↓ (DT hold time)	15	—	ns	

© 2010 Microchip Technology Inc.

TABLE 26-24: A/D CONVERTER CHARACTERISTICS: PIC18F2XK20/4XK20

Param No.	Symbol	Characteristic	Min	Typ	Max	Units	Conditions
A01	NR	Resolution	—	—	10	bits	-40°C to +85°C, ΔVREF ≥ 2.0V
A03	EIL	Integral Linearity Error	—	±0.5	±1	LSb	-40°C to +85°C, ΔVREF ≥ 2.0V
A04	EDL	Differential Linearity Error	—	±0.4	±1	LSb	-40°C to +85°C, ΔVREF ≥ 2.0V
A06	EOFF	Offset Error	—	0.4	±2	LSb	-40°C to +85°C, ΔVREF ≥ 2.0V
A07	EGN	Gain Error	—	0.3	±2	LSb	-40°C to +85°C, ΔVREF ≥ 2.0V
A08	ETOTL	Total Error	—	1	±3	LSb	-40°C to +85°C, ΔVREF ≥ 2.0V
A20	ΔVREF	Reference Voltage Range (VREFH – VREFL)	1.8 2.0	— —	— —	V V	Absolute Minimum Minimum for 1LSb Accuracy
A21	VREFH	Reference Voltage High	VDD/2	—	VDD + 0.3	V	
A22	VREFL	Reference Voltage Low	VSS – 0.3V	—	VDD/2	V	
A25	VAIN	Analog Input Voltage	VREFL	—	VREFH	V	
A30	ZAIN	Recommended Impedance of Analog Voltage Source	—	—	3	kΩ	-40°C to +85°C

Note 1: The A/D conversion result never decreases with an increase in the input voltage and has no missing codes.

2: VREFH current is from RA3/AN3/VREF+ pin or VDD, whichever is selected as the VREFH source. VREFL current is from RA2/AN2/VREF-/CVREF pin or VSS, whichever is selected as the VREFL source.

FIGURE 26-22: A/D CONVERSION TIMING

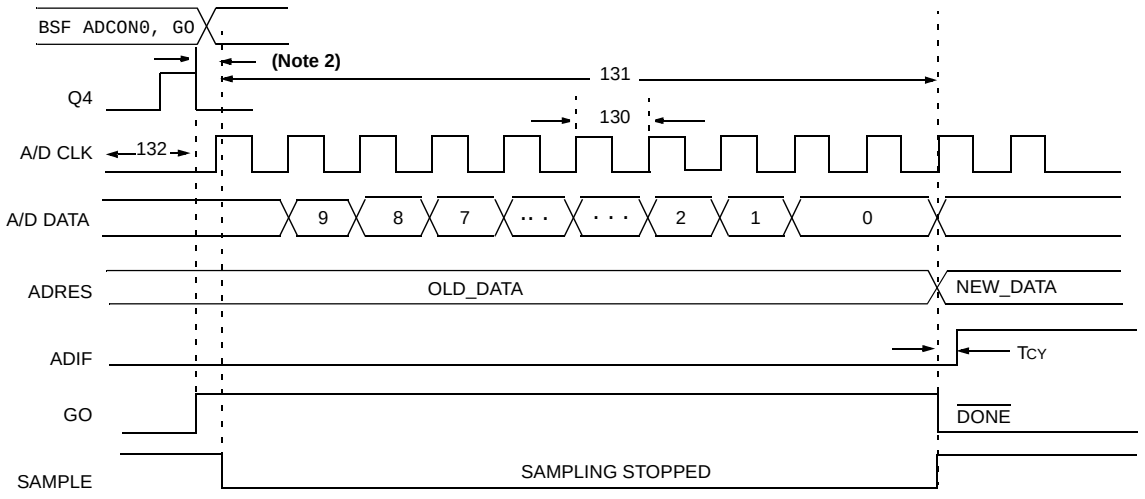

Note 1: If the A/D clock source is selected as RC, a time of TCY is added before the A/D clock starts. This allows the SLEEP instruction to be executed.

2: This is a minimal RC delay (typically 100 ns), which also disconnects the holding capacitor from the analog input.

TABLE 26-25: A/D CONVERSION REQUIREMENTS

Param No.	Symbol	Characteristic	Min	Max	Units	Conditions
130	TAD	A/D Clock Period	0.7	25.0(1)	µs	TOSC based, -40°C to +85°C
			0.7	4.0(1)	µs	TOSC based, +85°C to +125°C
			1.0	4.0	µs	FRC mode, VDD≥2.0V
131	TCNV	Conversion Time (not including acquisition time) **(Note 2)**	12	12	TAD	
132	TACQ	Acquisition Time **(Note 3)**	1.4	—	µs	VDD = 3V, Rs = 50Ω
135	TSWC	Switching Time from Convert → Sample	—	**(Note 4)**		
136	TDIS	Discharge Time	2	2	TAD	

Legend: TBD = To Be Determined

Note 1: The time of the A/D clock period is dependent on the device frequency and the TAD clock divider.

2: ADRES register may be read on the following TCY cycle.

3: The time for the holding capacitor to acquire the "New" input voltage when the voltage changes full scale after the conversion (VDD to VSS or VSS to VDD). The source impedance (*RS*) on the input channels is 50 Ω.

4: On the following cycle of the device clock.

© 2010 Microchip Technology Inc.

27.0 DC AND AC CHARACTERISTICS GRAPHS AND TABLES

FIGURE 27-1: PIC18F4XK20/PIC18F2XK20 TYPICAL BASE IPD

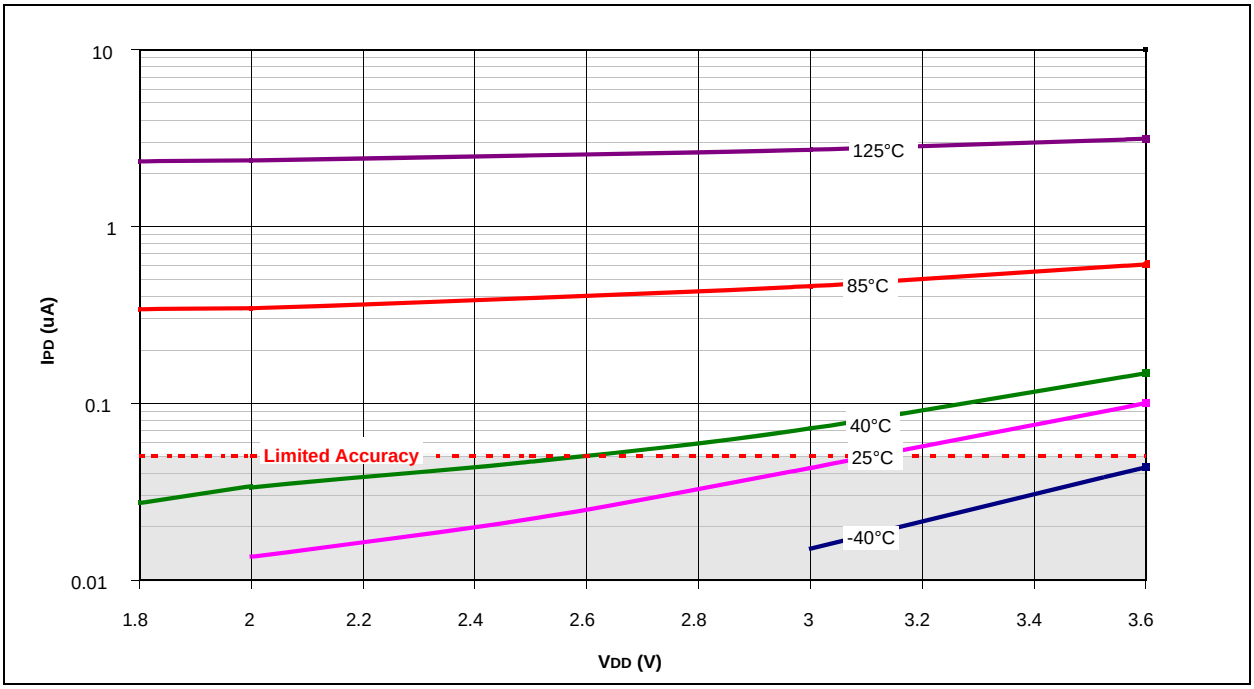

FIGURE 27-2: PIC184XK20/PIC18F2XK20 MAXIMUM BASE IPD

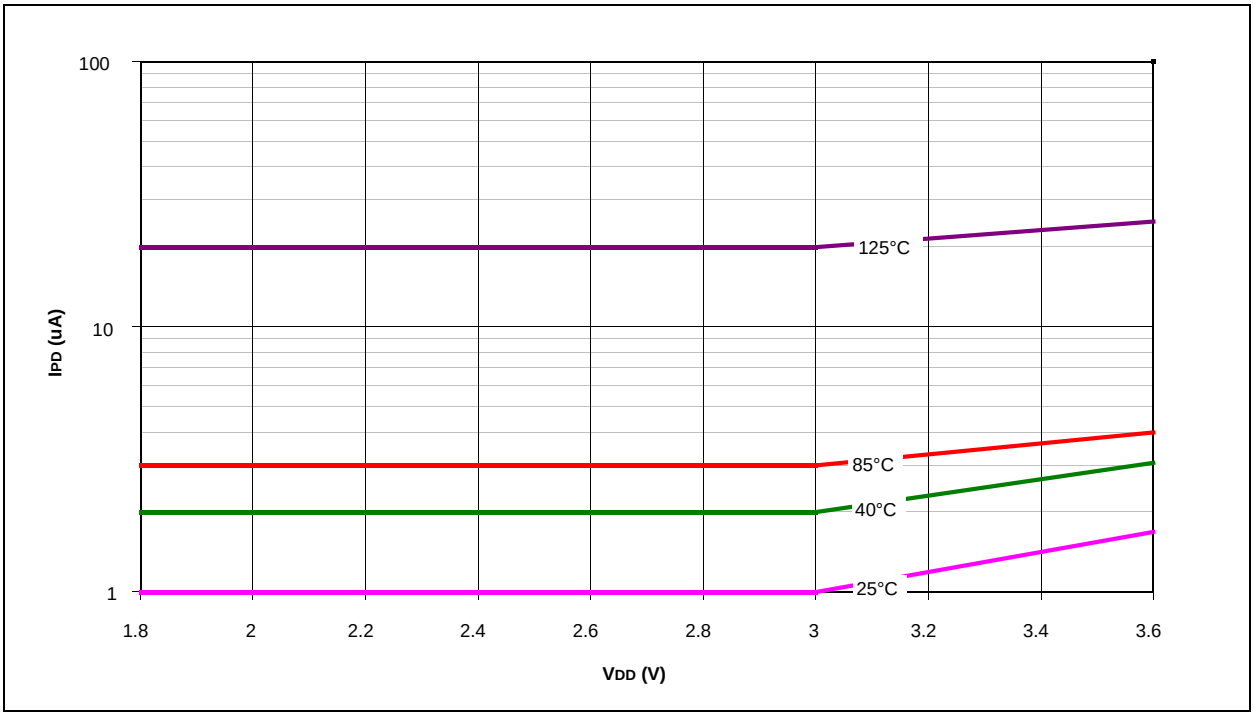

FIGURE 27-3: PIC18F4XK20/PIC18F2XK20 TYPICAL RC_RUN 31 KHZ IDD

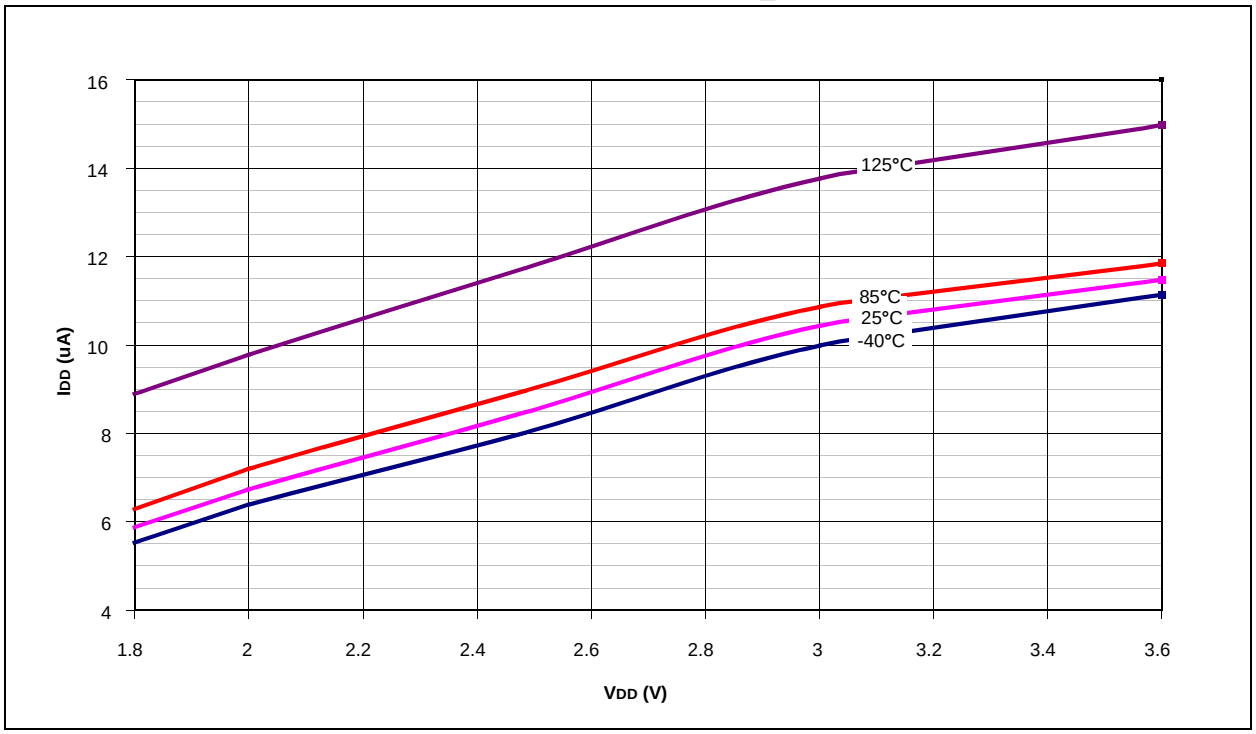

FIGURE 27-4: PIC18F4XK20/PIC18F2XK20 MAXIMUM RC_RUN 31 KHZ IDD

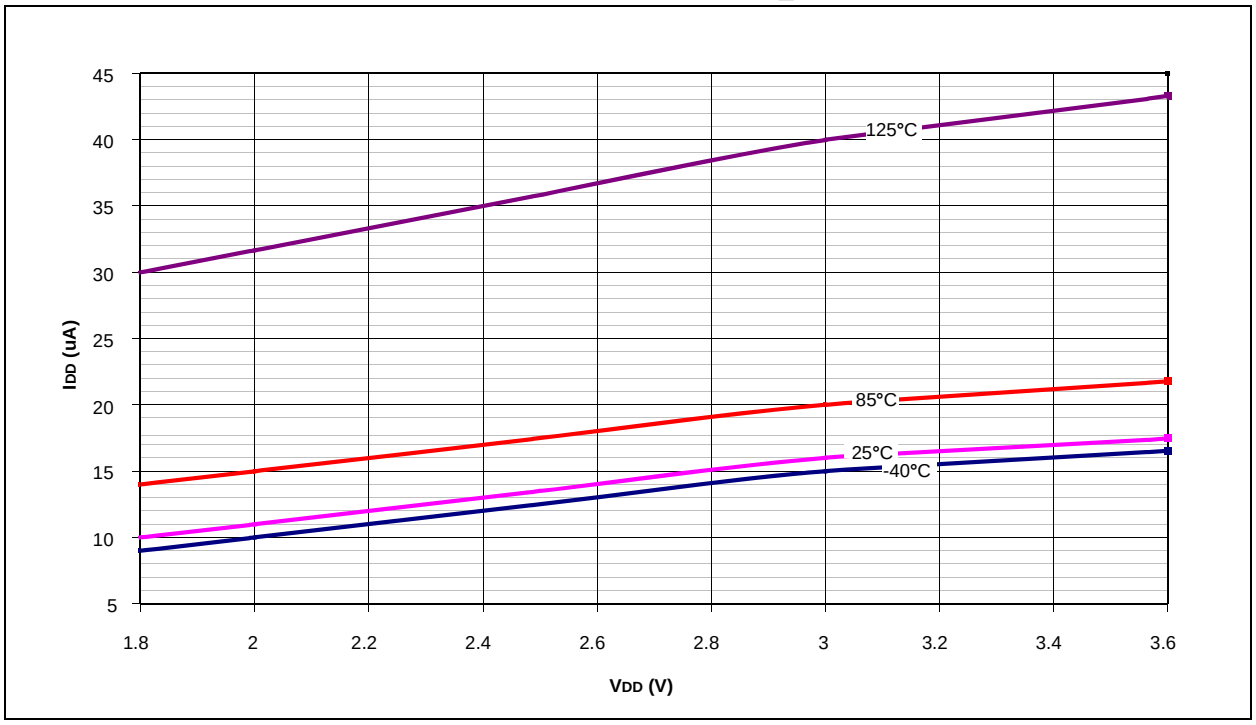

© 2010 Microchip Technology Inc.

FIGURE 27-5: PIC18F4XK20/PIC18F2XK20 TYPICAL RC_RUN IDD

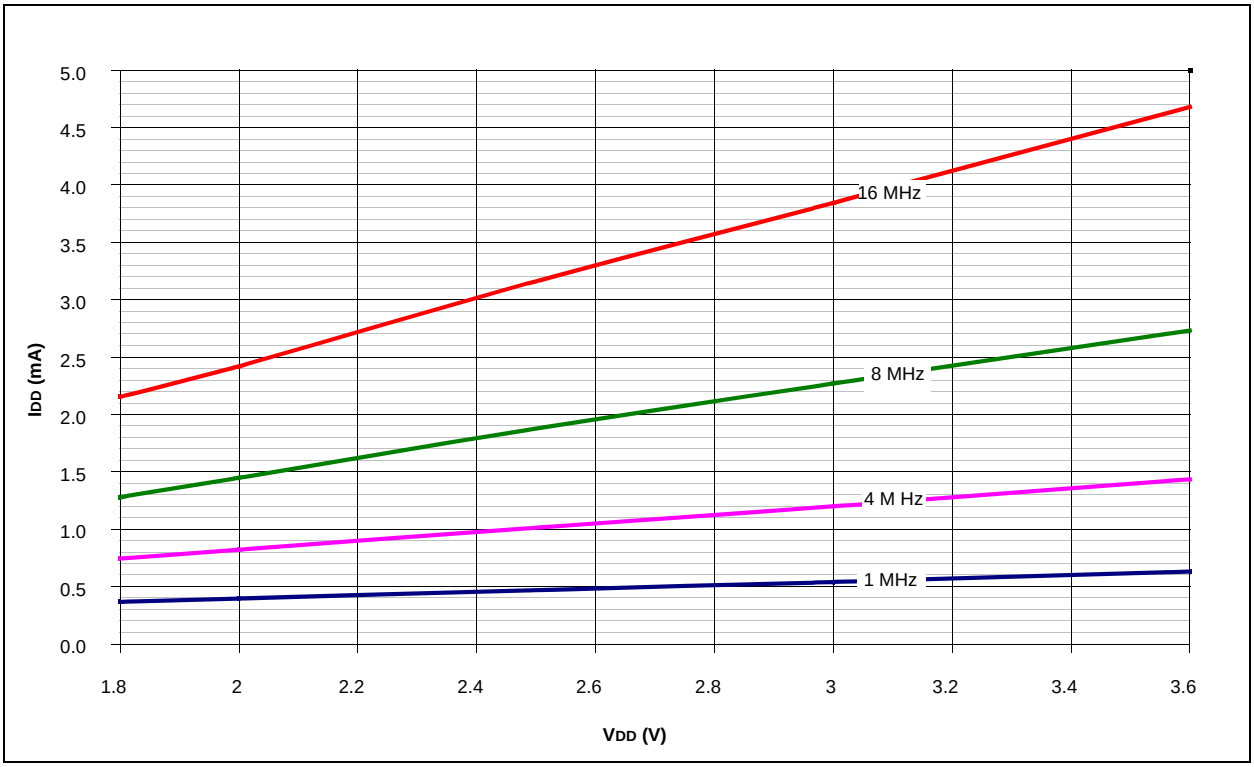

FIGURE 27-6: PIC18F4XK20/PIC18F2XK20 MAXIMUM RC_RUN IDD

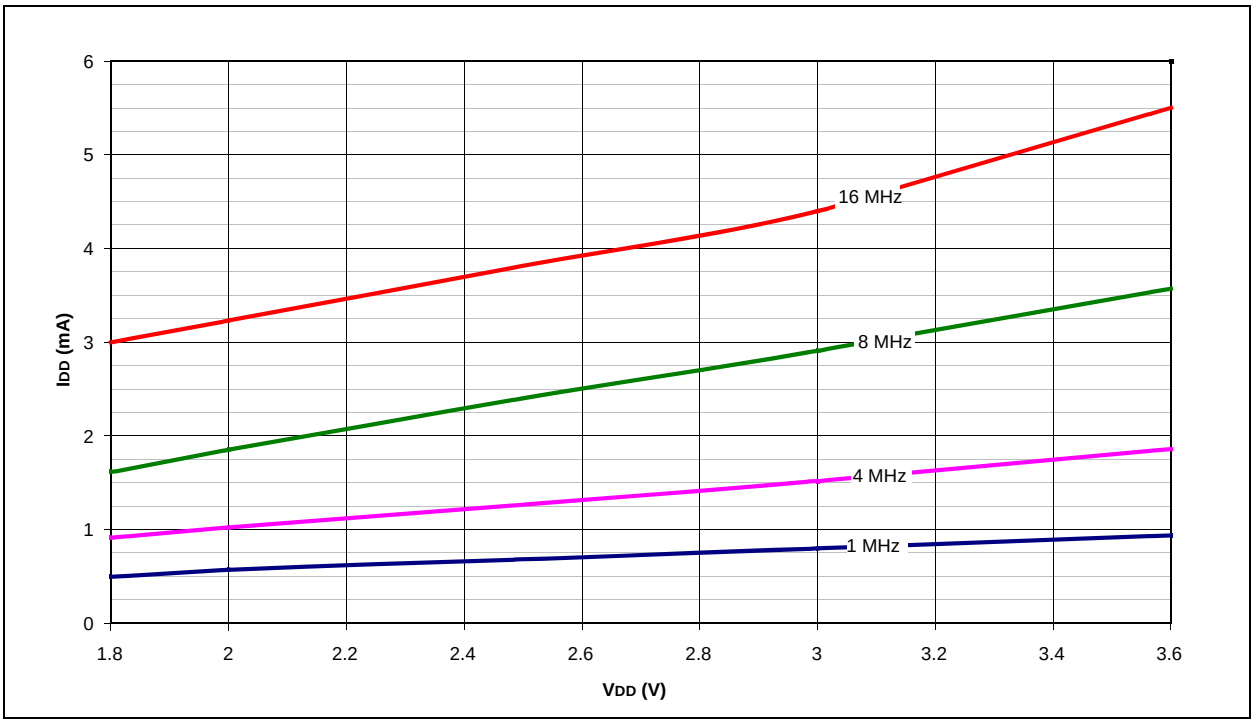

FIGURE 27-7: PIC18F4XK20/PIC18F2XK20 TYPICAL RC_IDLE 31 KHZ IDD

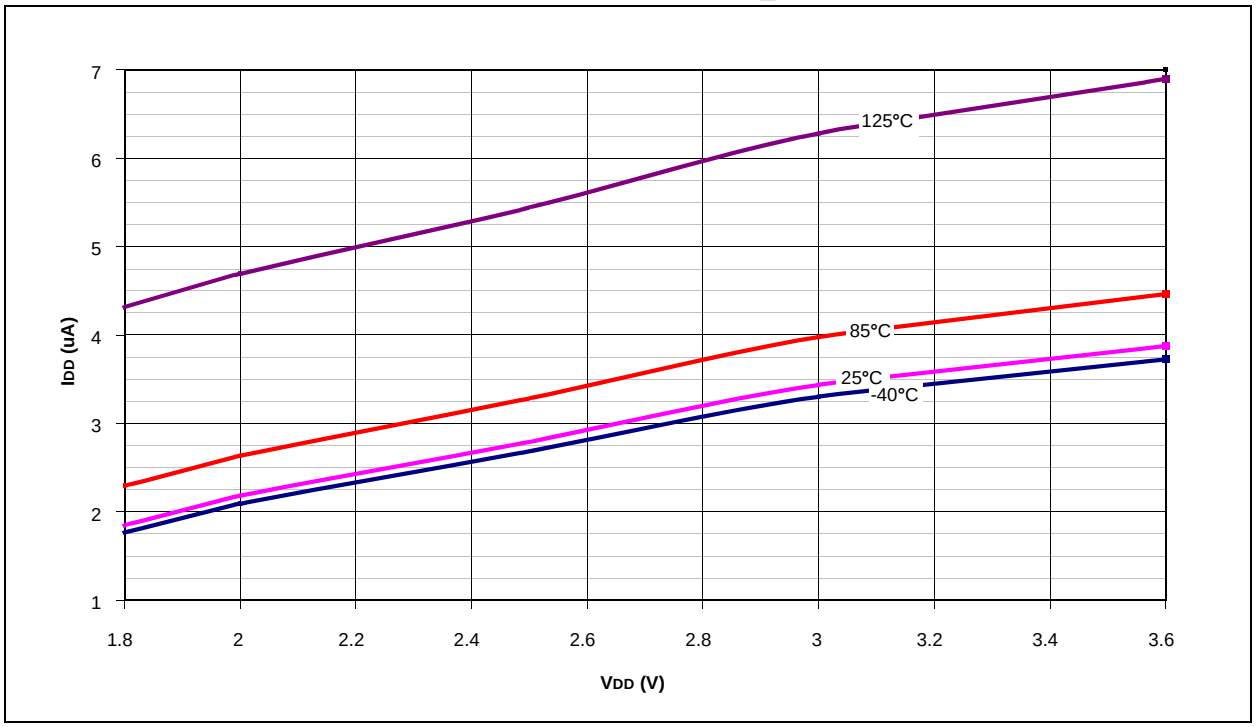

FIGURE 27-8: PIC18F4XK20/PIC18F2XK20 MAXIMUM RC_IDLE 31 KHZ IDD

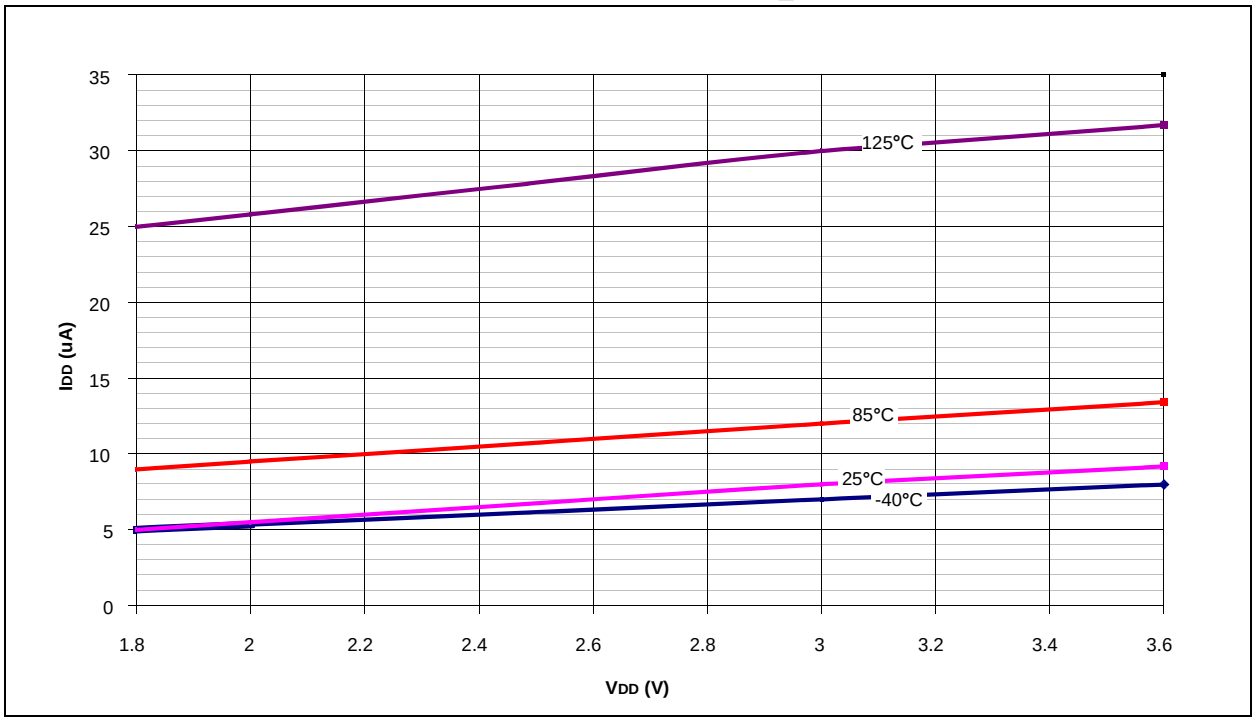

© 2010 Microchip Technology Inc.

FIGURE 27-9: PIC18F4XK20/PIC18F2XK20 TYPICAL RC_IDLE IDD

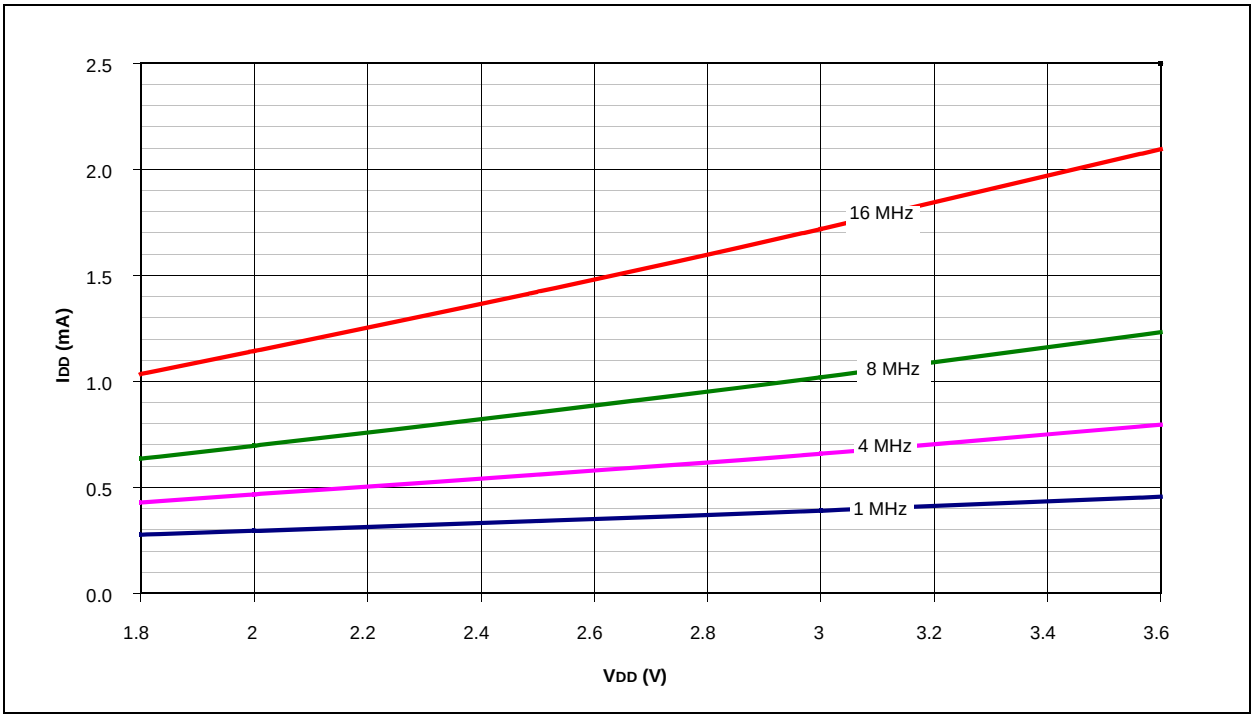

FIGURE 27-10: PIC18F4XK20/PIC18F2XK20 MAXIMUM RC_IDLE IDD

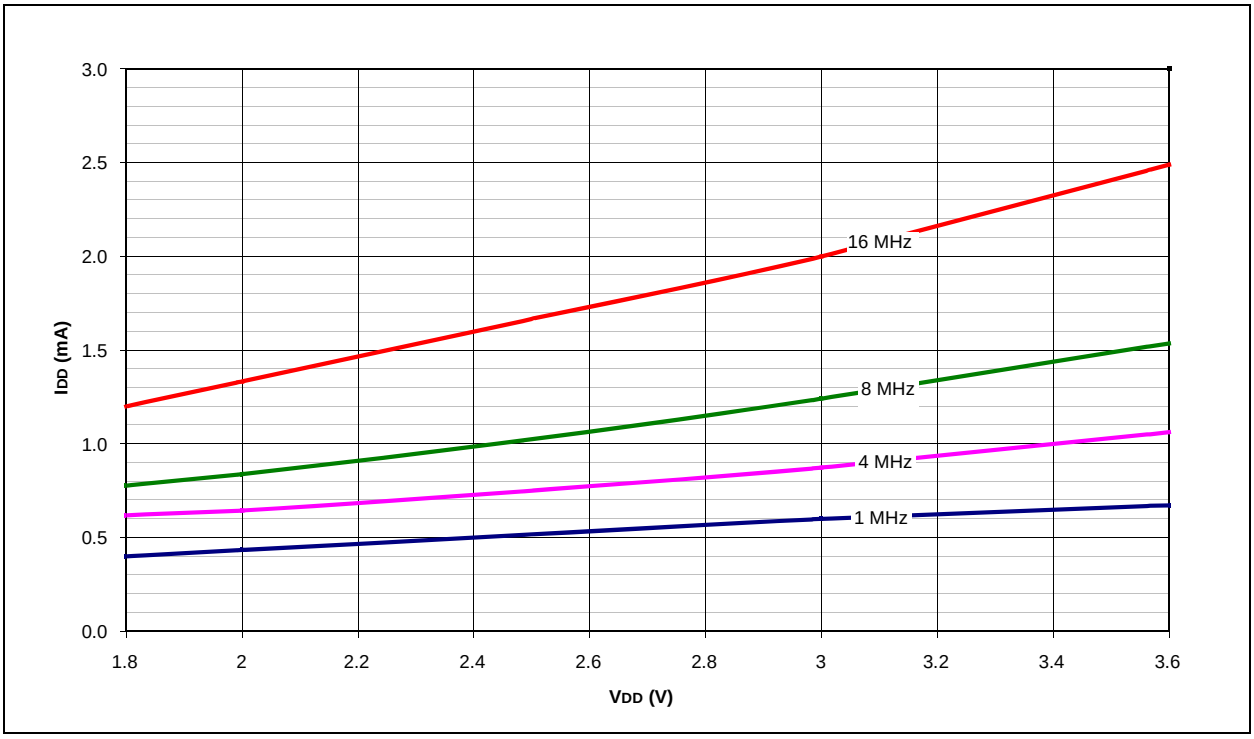

FIGURE 27-11: PIC18F4XK20/PIC18F2XK20 TYPICAL PRI_RUN IDD (EC)

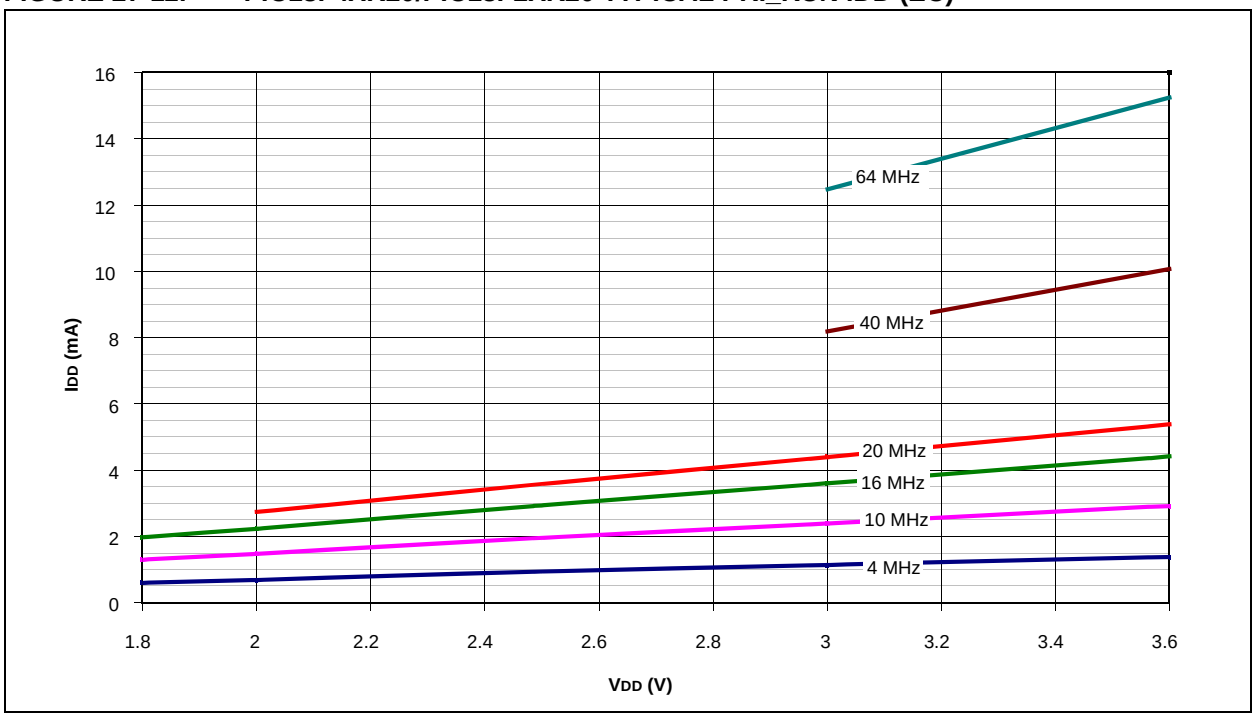

FIGURE 27-12: PIC18F4XK20/PIC18F2XK20 MAXIMUM PRI_RUN IDD (EC)

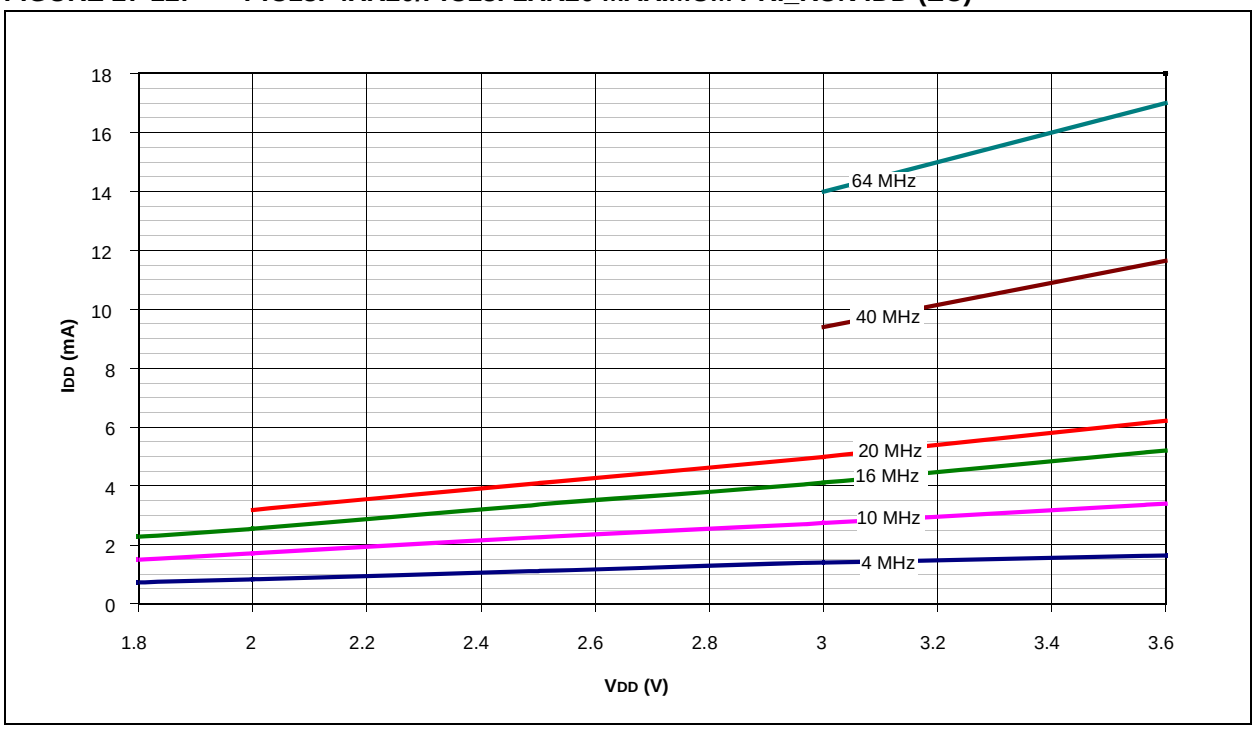

© 2010 Microchip Technology Inc.

FIGURE 27-13: PIC18F4XK20/PIC18F2XK20 TYPICAL PRI_RUN IDD (HS + PLL)

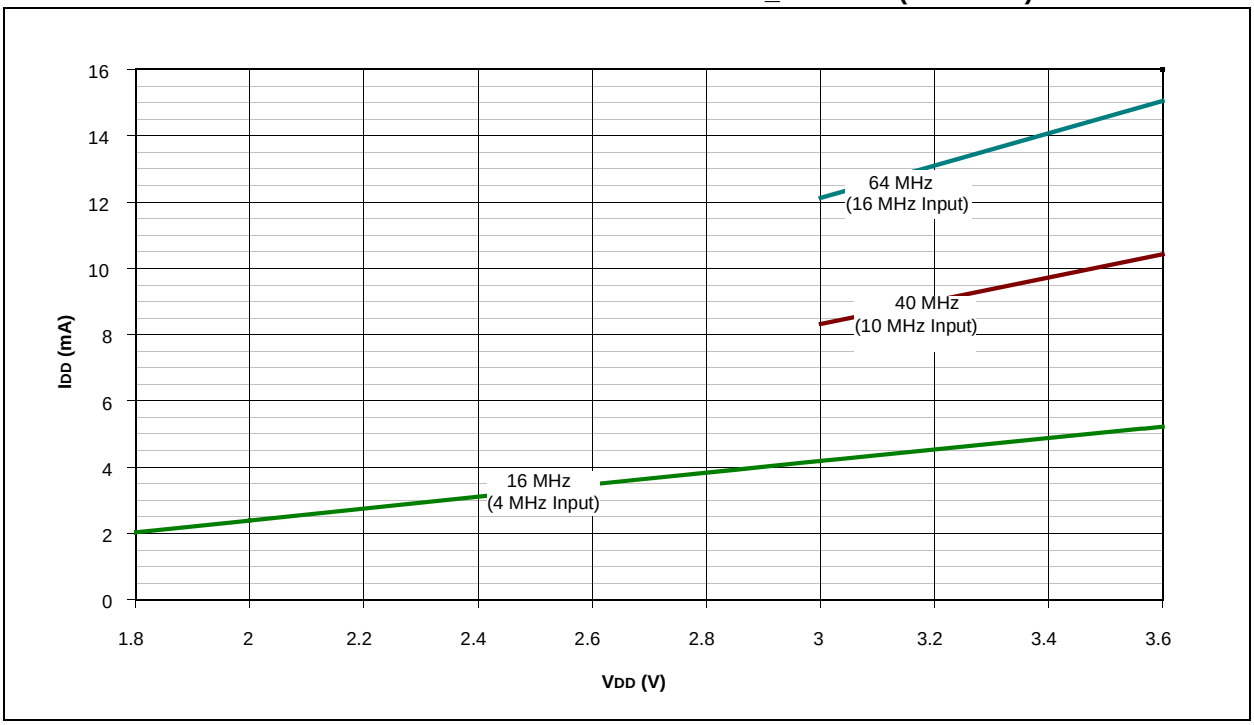

FIGURE 27-14: PIC18F4XK20/PIC18F2XK20 MAXIMUM PRI_RUN IDD (HS + PLL)

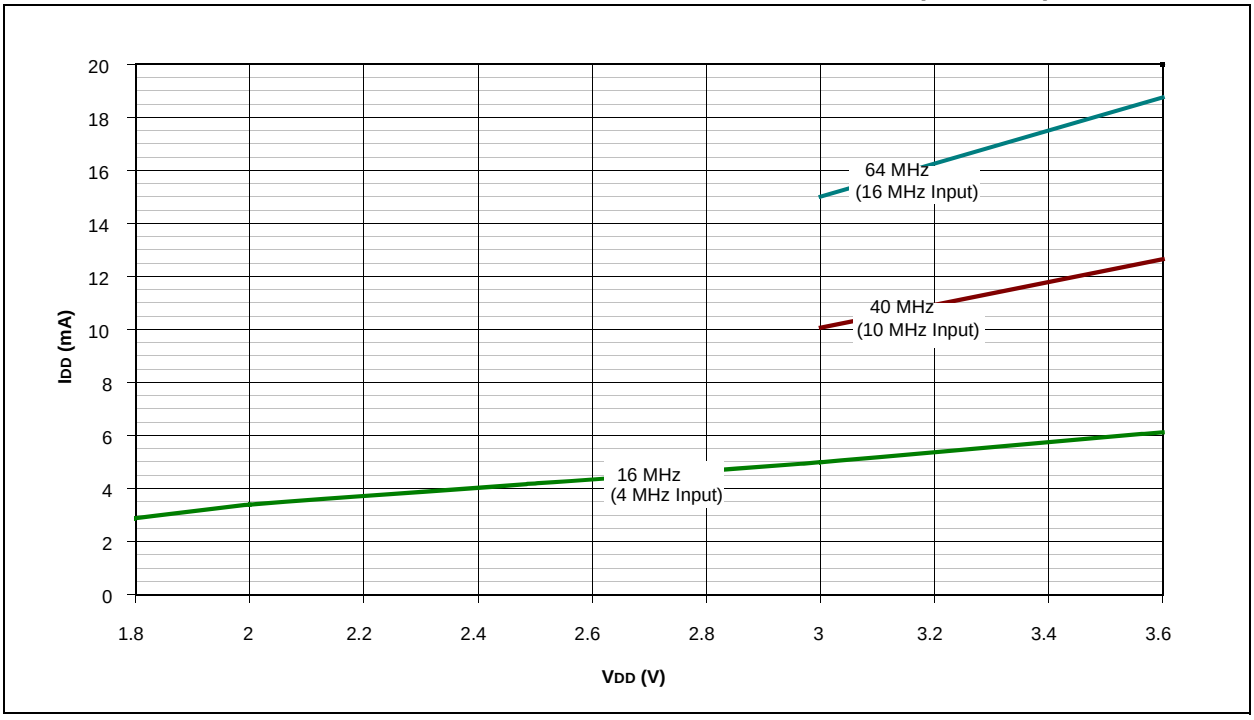

FIGURE 27-15: PIC18F4XK20/PIC18F2XK20 TYPICAL PRI_IDLE IDD (EC)

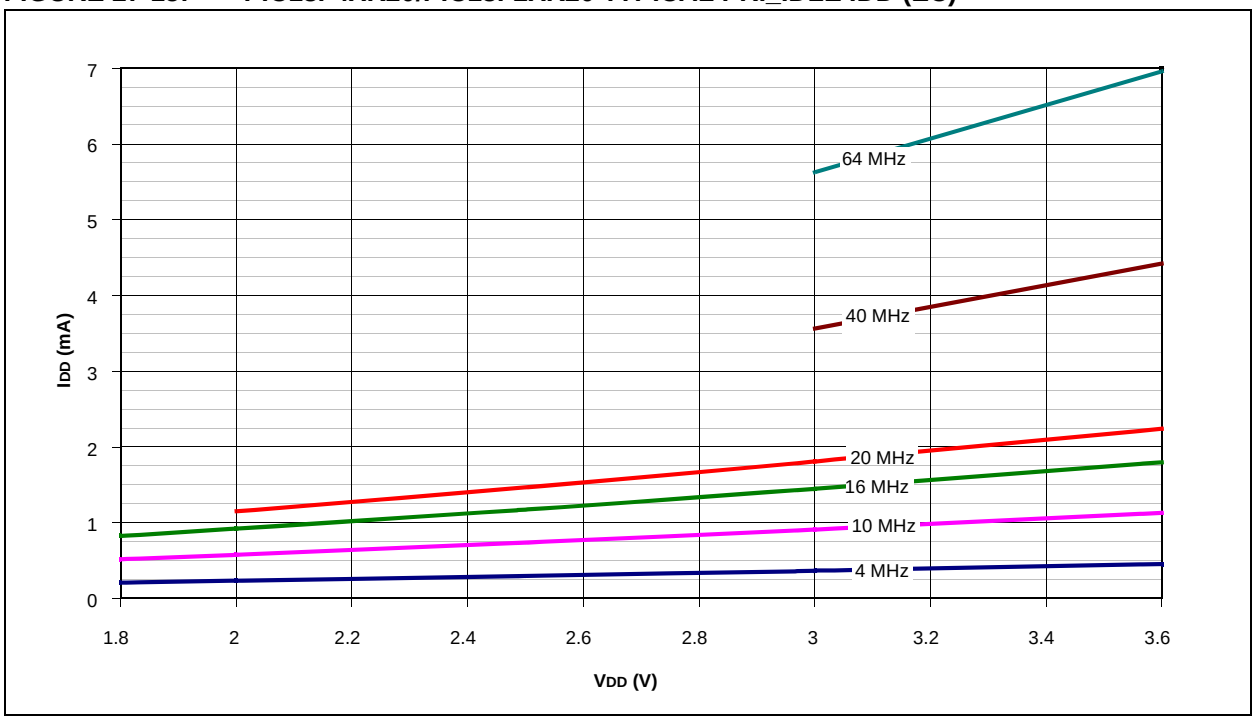

FIGURE 27-16: PIC18F4XK20/PIC18F2XK20 MAXIMUM PRI_IDLE IDD (EC)

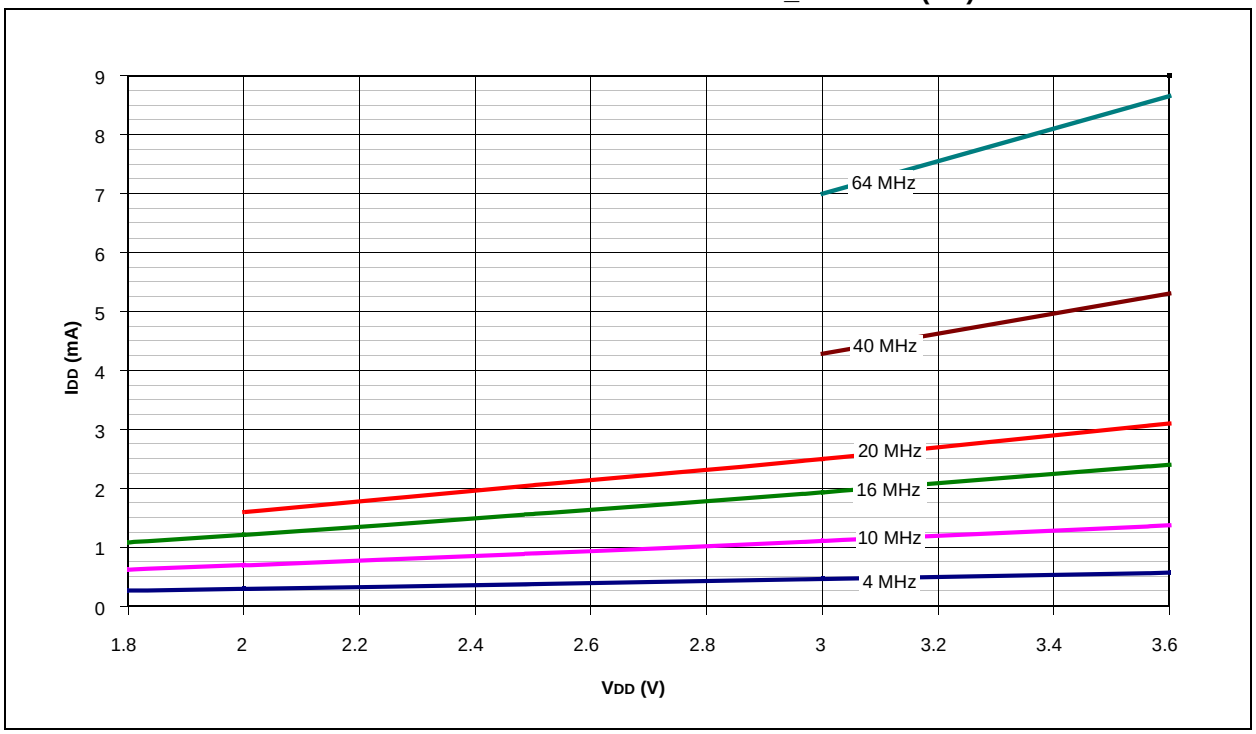

© 2010 Microchip Technology Inc.

FIGURE 27-17: PIC18F4XK20/PIC18F2XK20 ΔIWDT – Delta IPD for Watchdog Timer, -40°C to +125°C

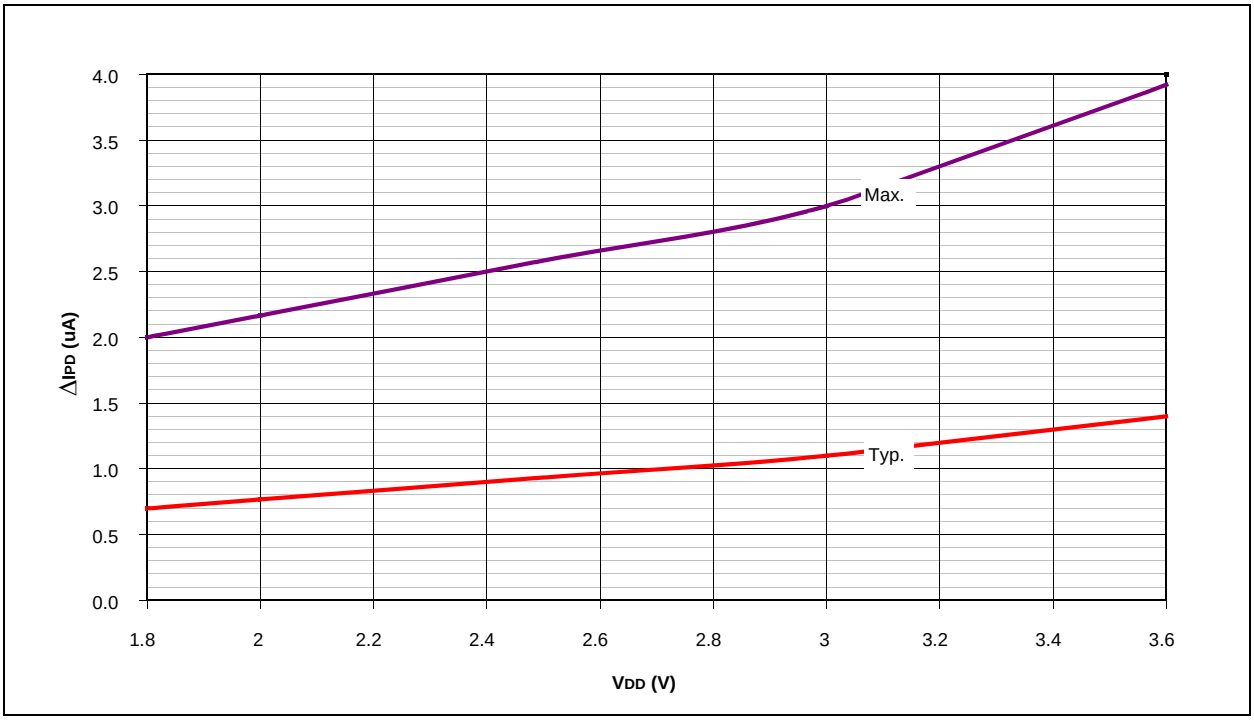

FIGURE 27-18: PIC18F4XK20/PIC18F2XK20 ΔIBOR and ΔIHLVD – Delta IPD for Brownout Reset and High/Low Voltage Detect, -40°C to +125°C

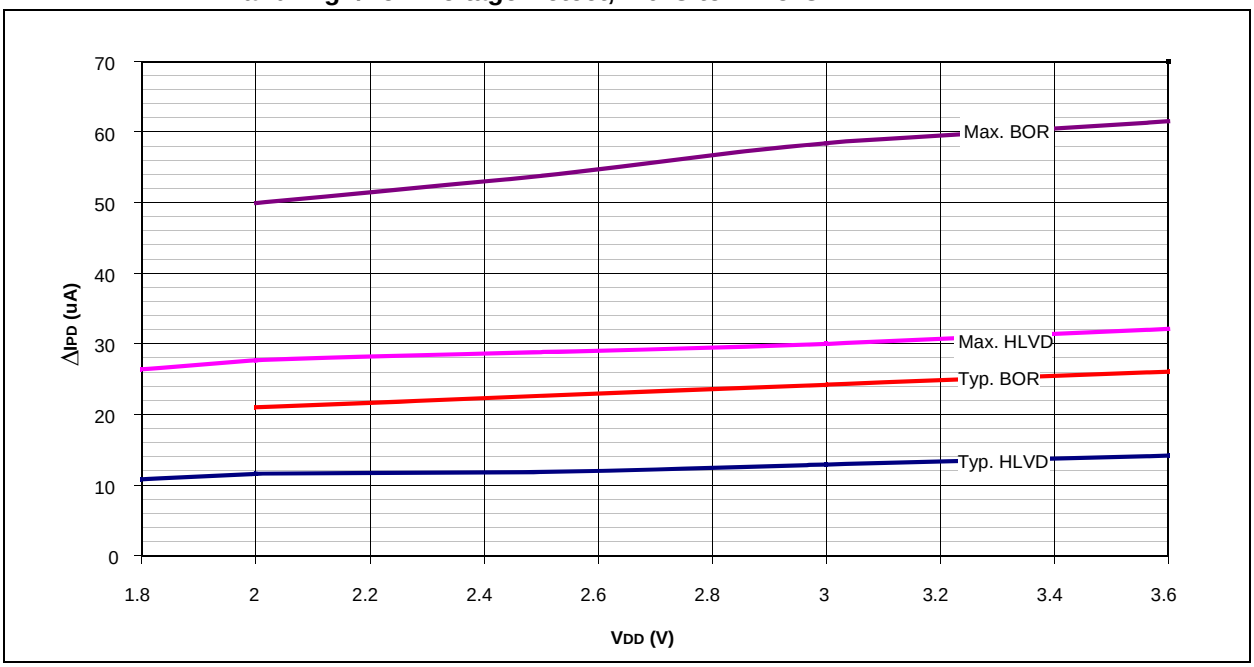

FIGURE 27-19: PIC18F4XK20/PIC18F2XK20 ΔIOCSB – Delta IPD for Low Power Timer1 Oscillator

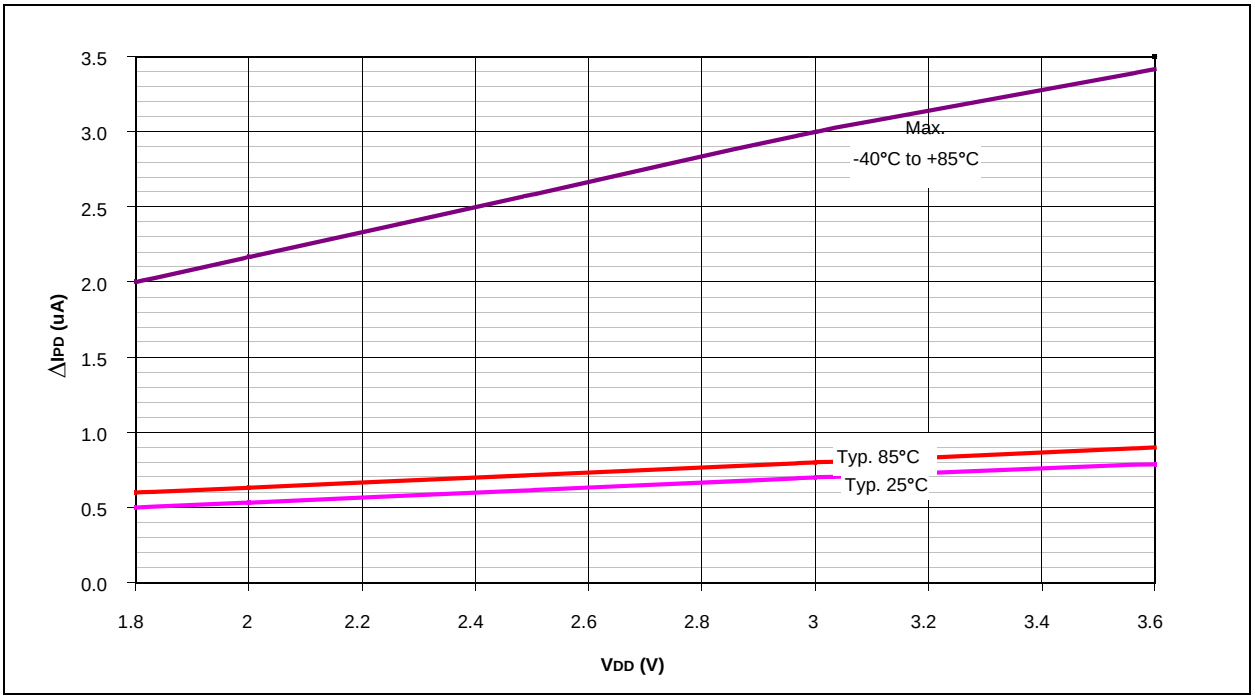

FIGURE 27-20: PIC18F4XK20/PIC18F2XK20 ΔIOCSB – Typical Delta IPD for High Power Timer1 Oscillator

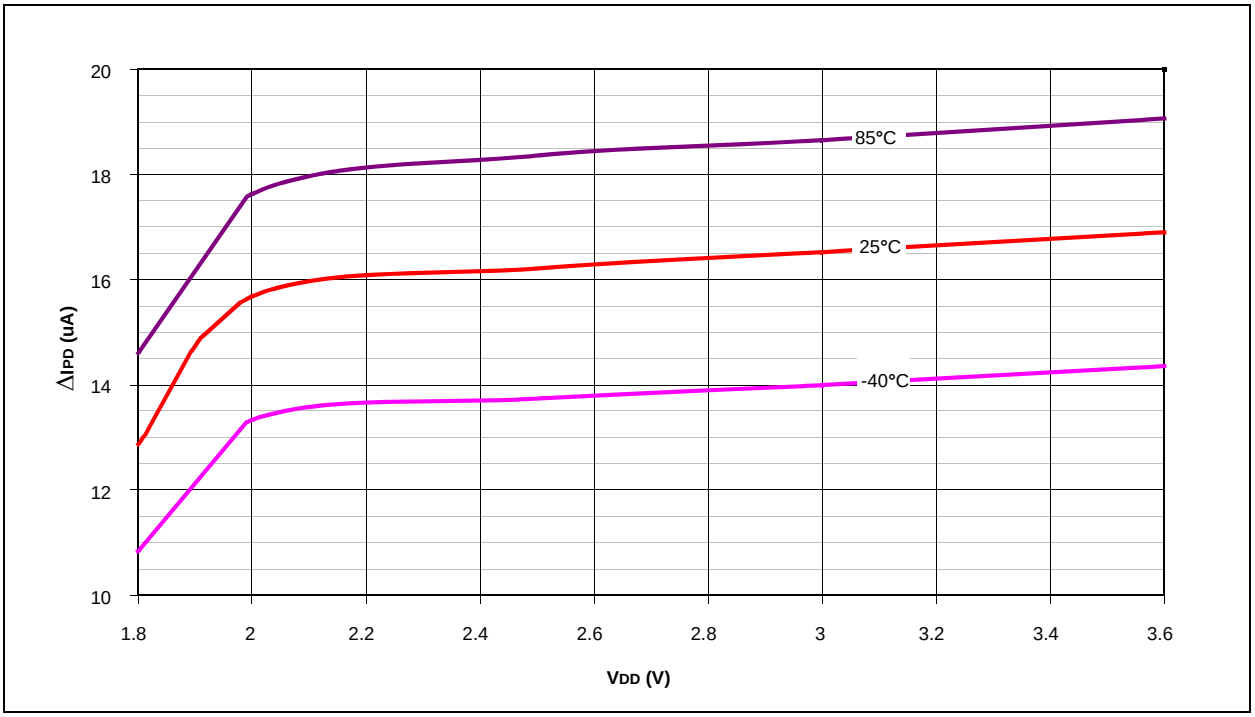

© 2010 Microchip Technology Inc.

FIGURE 27-21: PIC18F4XK20/PIC18F2XK20 ΔIOCSB – Maximum Delta IPD for High Power Timer1 Oscillator

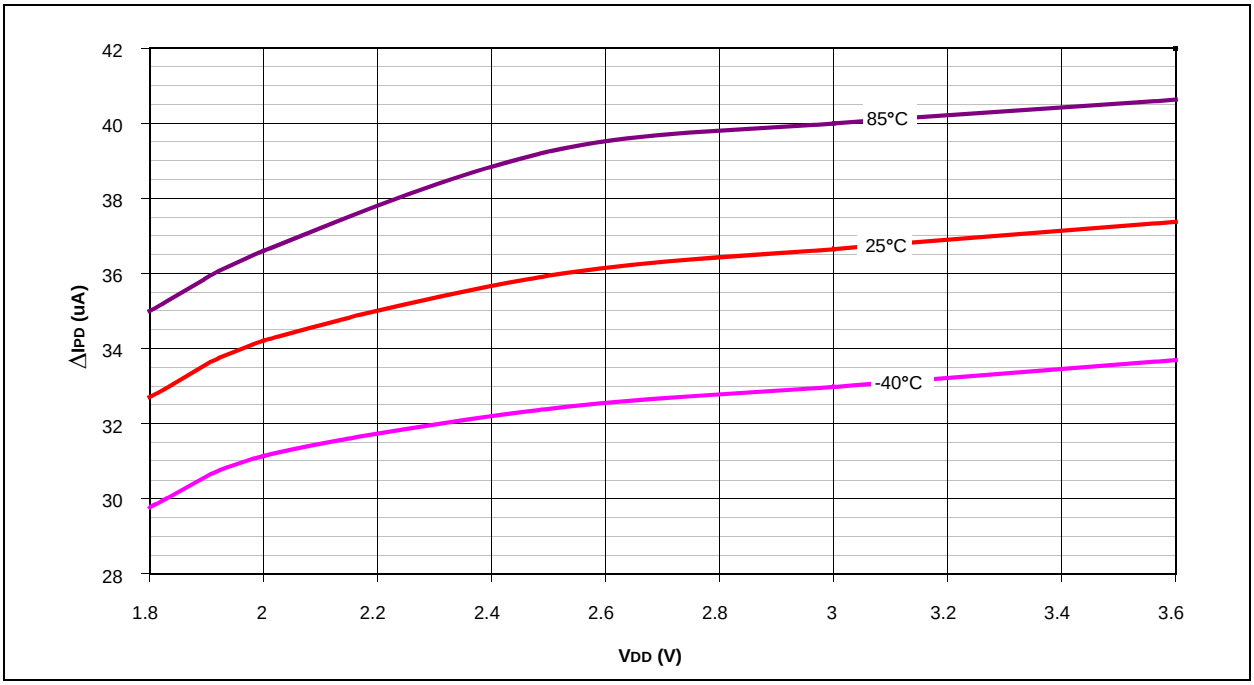

FIGURE 27-22: PIC18F4XK20/PIC18F2XK20 ΔICVREF – Delta IPD for Comparator Voltage Reference, -40°C to +125°C

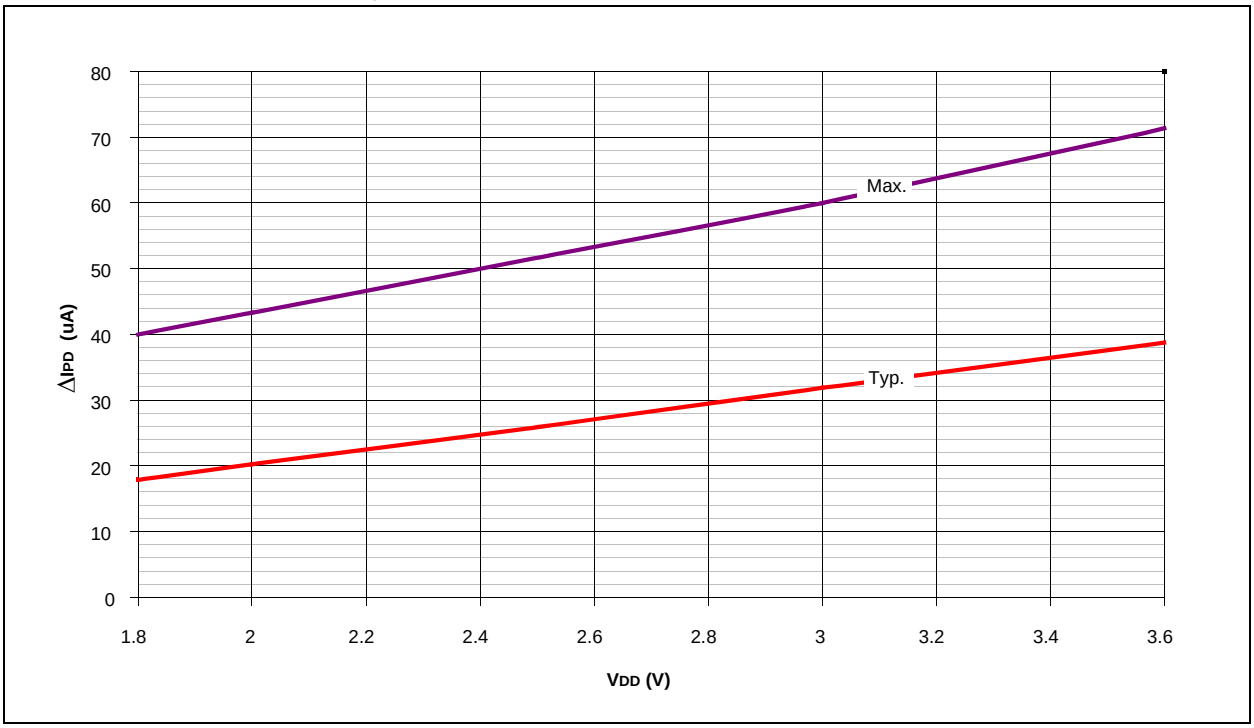

FIGURE 27-23: PIC18F4XK20/PIC18F2XK20 ΔIAD – Typical Delta IDD for ADC, 25°C to +125°C (Run Mode, ADC on, but not converting)

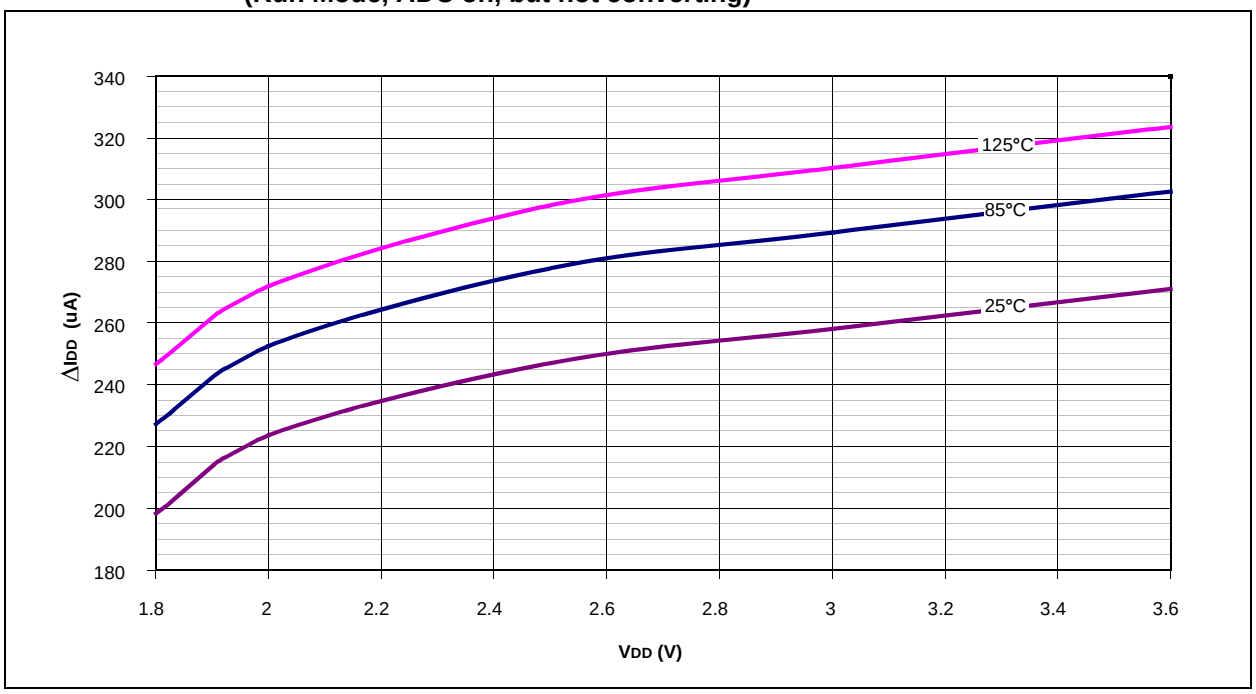

FIGURE 27-24: PIC18F4XK20/PIC18F2XK20 ΔIAD – Maximum Delta IDD for ADC, 25°C to +125°C (Run Mode, ADC on, but not converting)

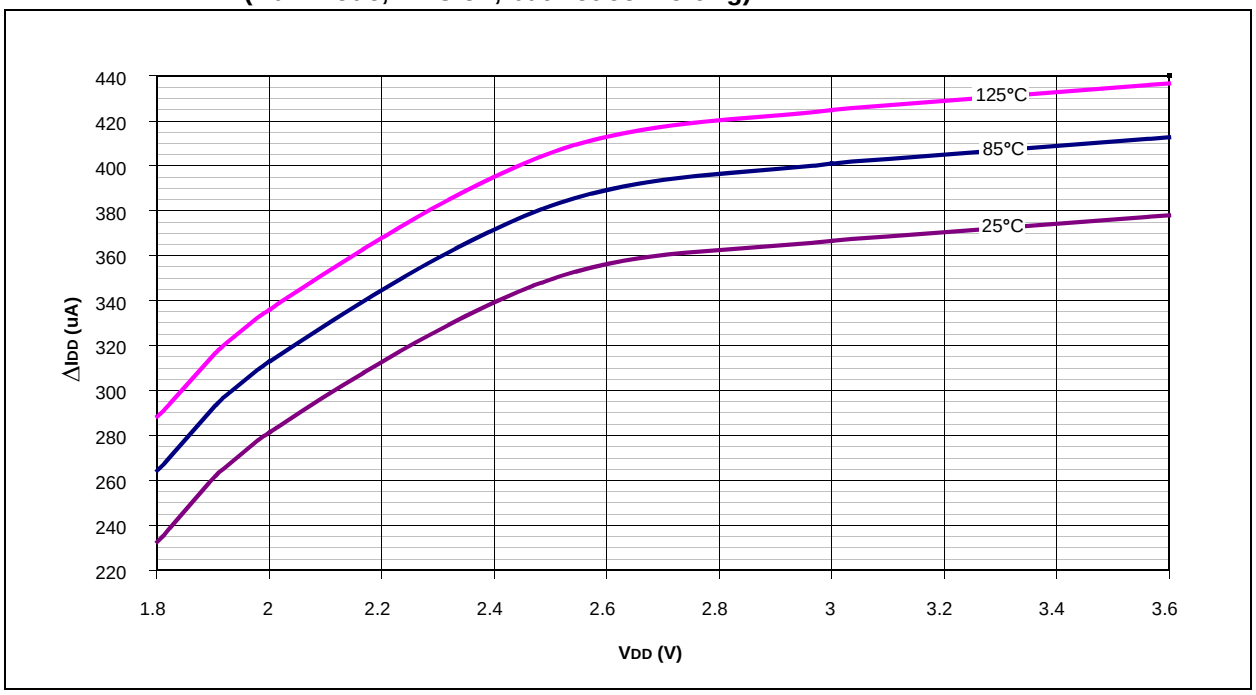

© 2010 Microchip Technology Inc.

FIGURE 27-25: PIC18F4XK20/PIC18F2XK20 ΔICOMP – Typical Delta IPD for Comparator in Low Power Mode, -40°C to +125°C

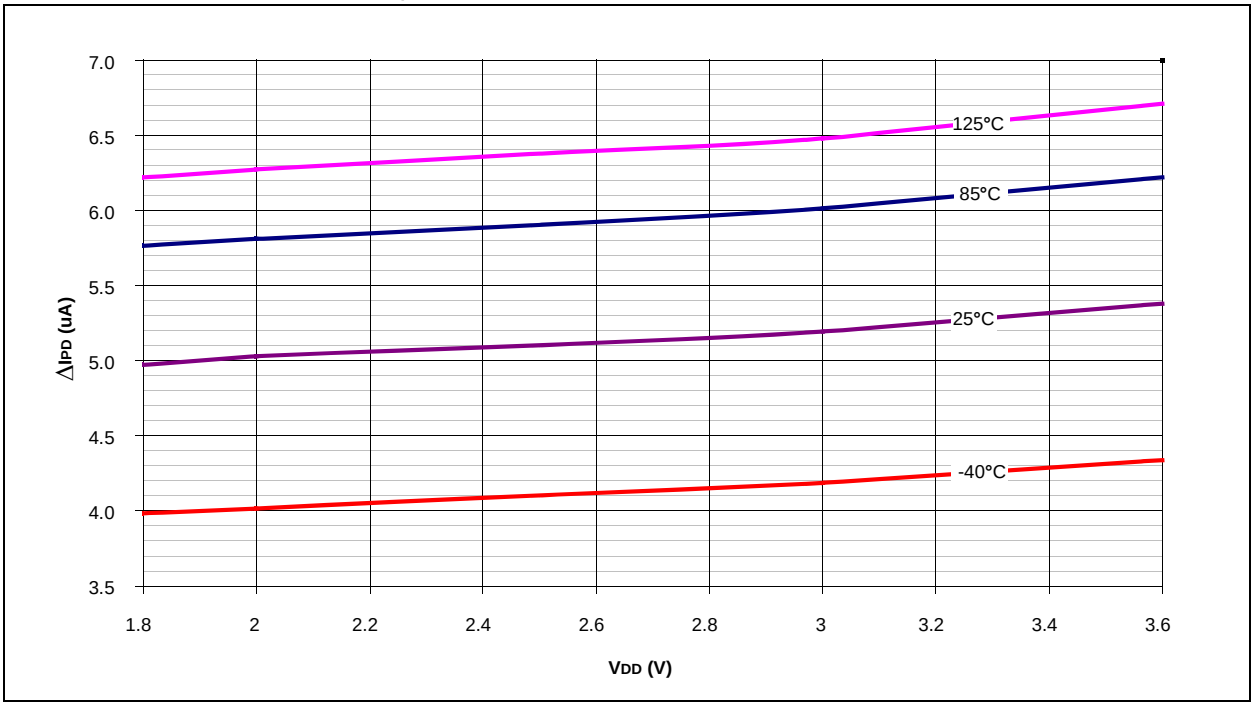

FIGURE 27-26: PIC18F4XK20/PIC18F2XK20 ΔICOMP – Maximum Delta IPD for Comparator in Low Power Mode, -40°C to +125°C

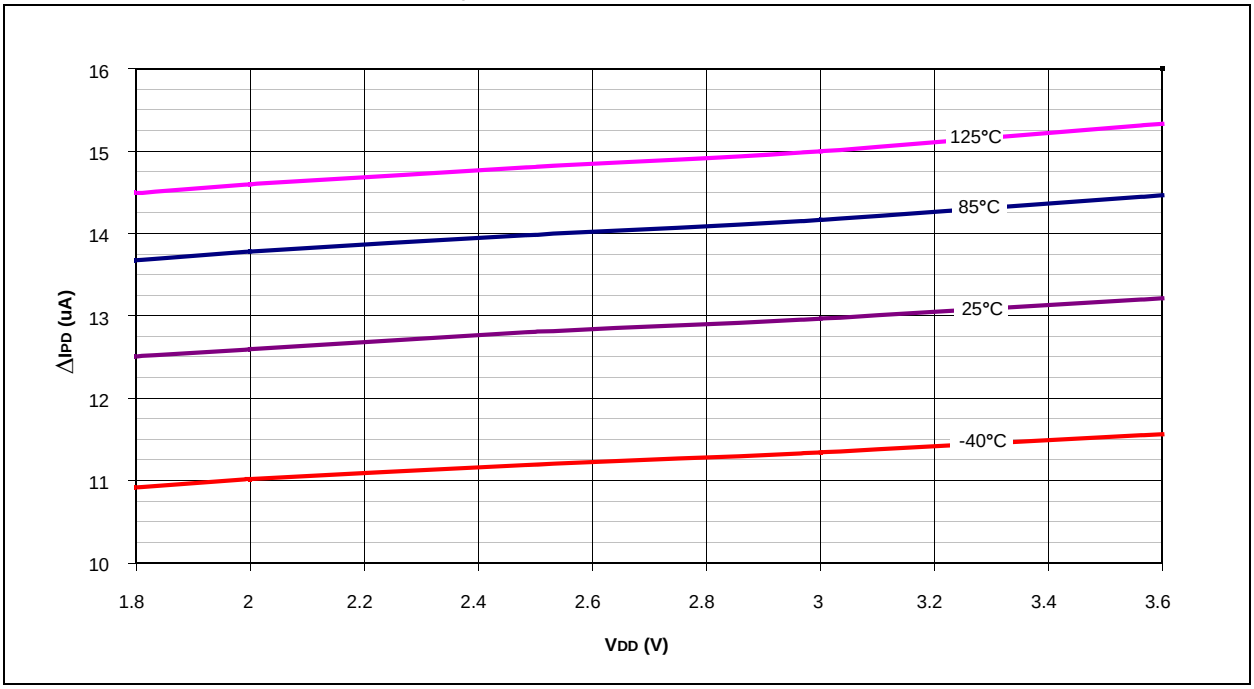

FIGURE 27-27: PIC18F4XK20/PIC18F2XK20 ΔICOMP – Typical Delta IPD for Comparator in High Power Mode, -40°C to +125°C

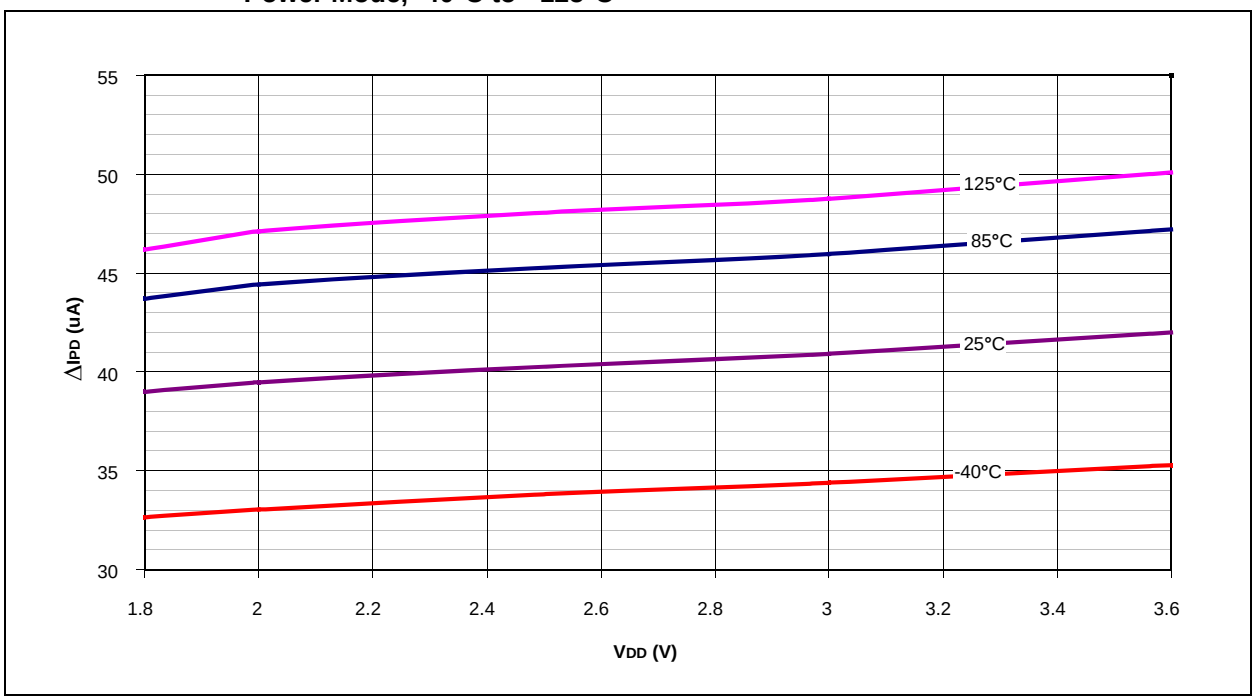

FIGURE 27-28: PIC18F4XK20/PIC18F2XK20 ΔICOMP – Maximum Delta IPD for Comparator in High Power Mode, -40°C to +125°C

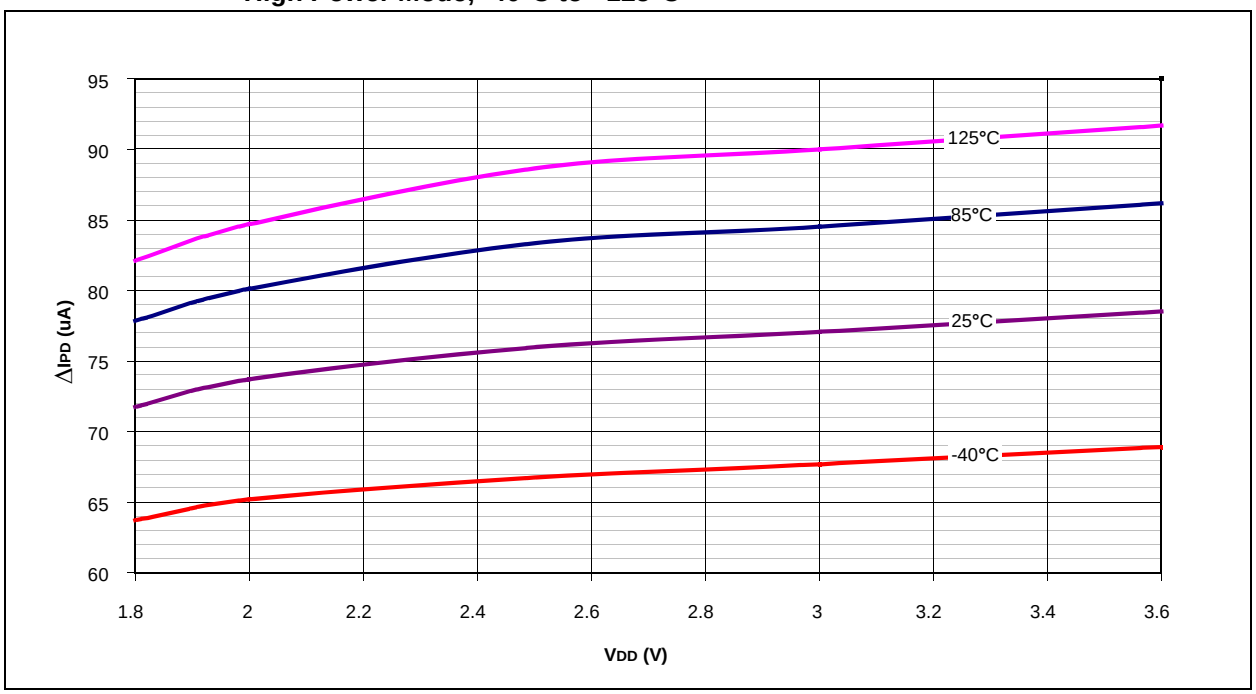

© 2010 Microchip Technology Inc.

FIGURE 27-29: PIC18F4XK20/PIC18F2XK20 COMPARATOR OFFSET (LOW POWER, VDD = 1.8V)

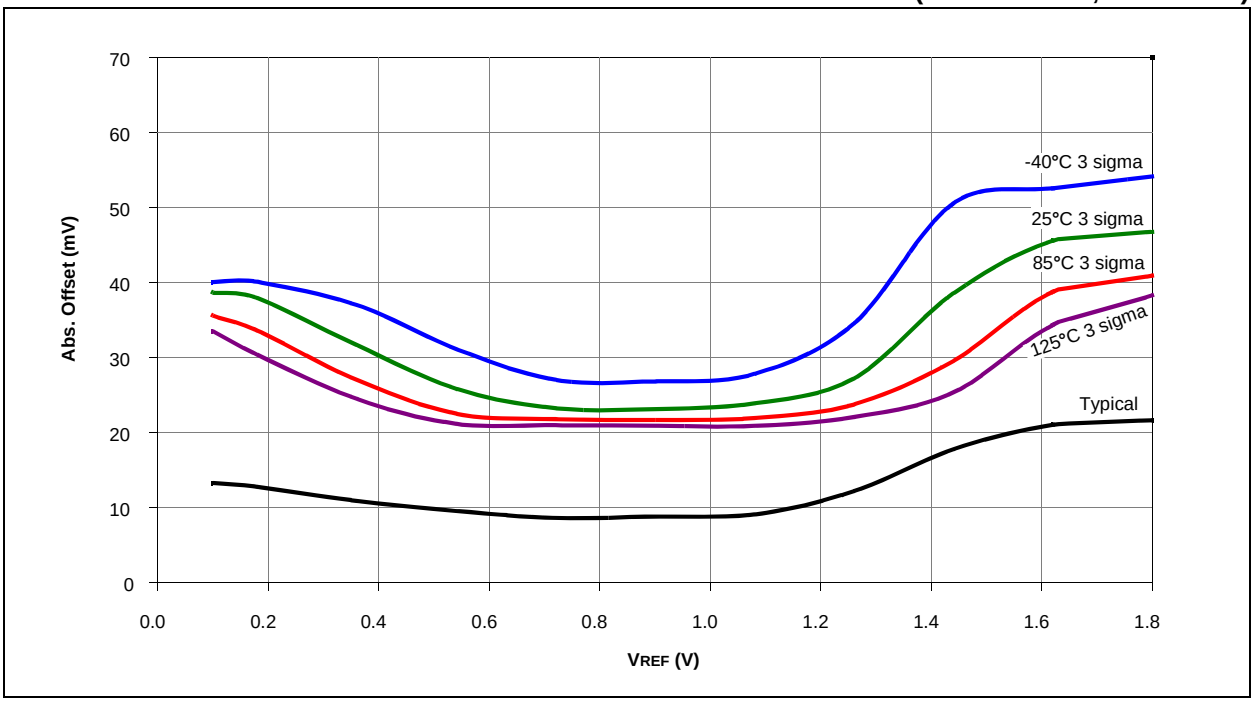

FIGURE 27-30: PIC18F4XK20/PIC18F2XK20 COMPARATOR OFFSET (LOW POWER, VDD = 3.6V)

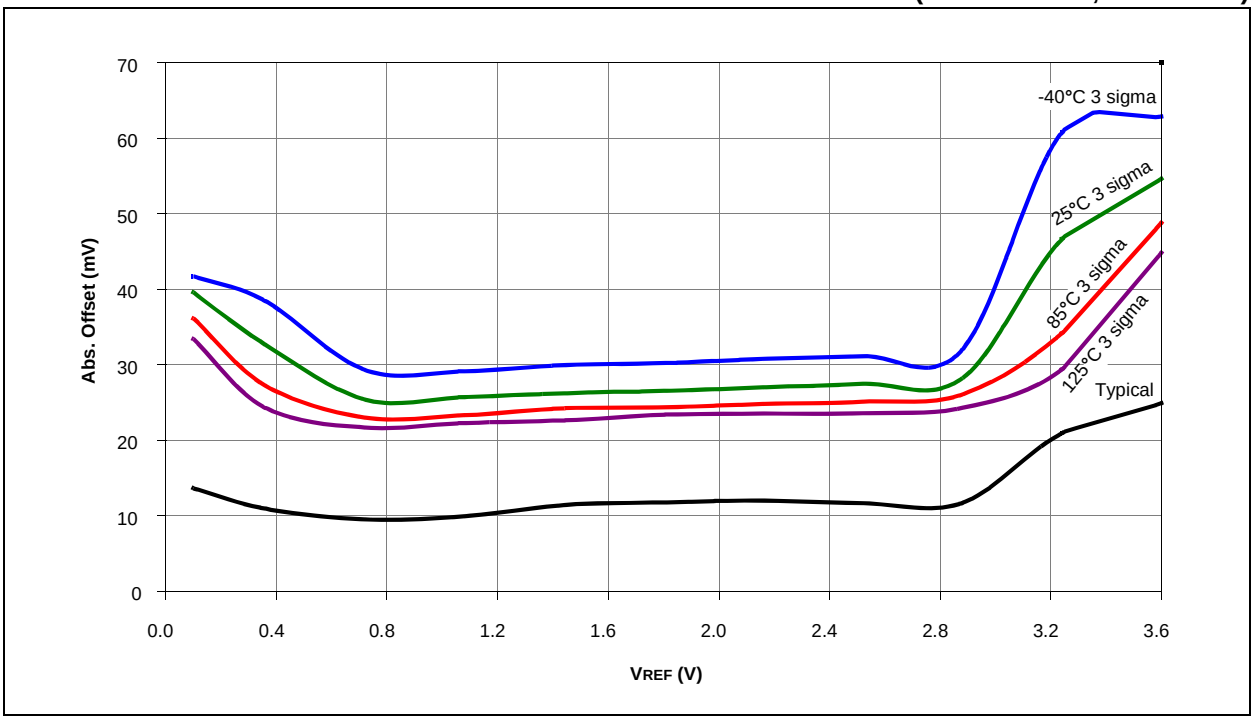

FIGURE 27-31: PIC18F4XK20/PIC18F2XK20 COMPARATOR OFFSET (HIGH POWER, VDD = 1.8V)

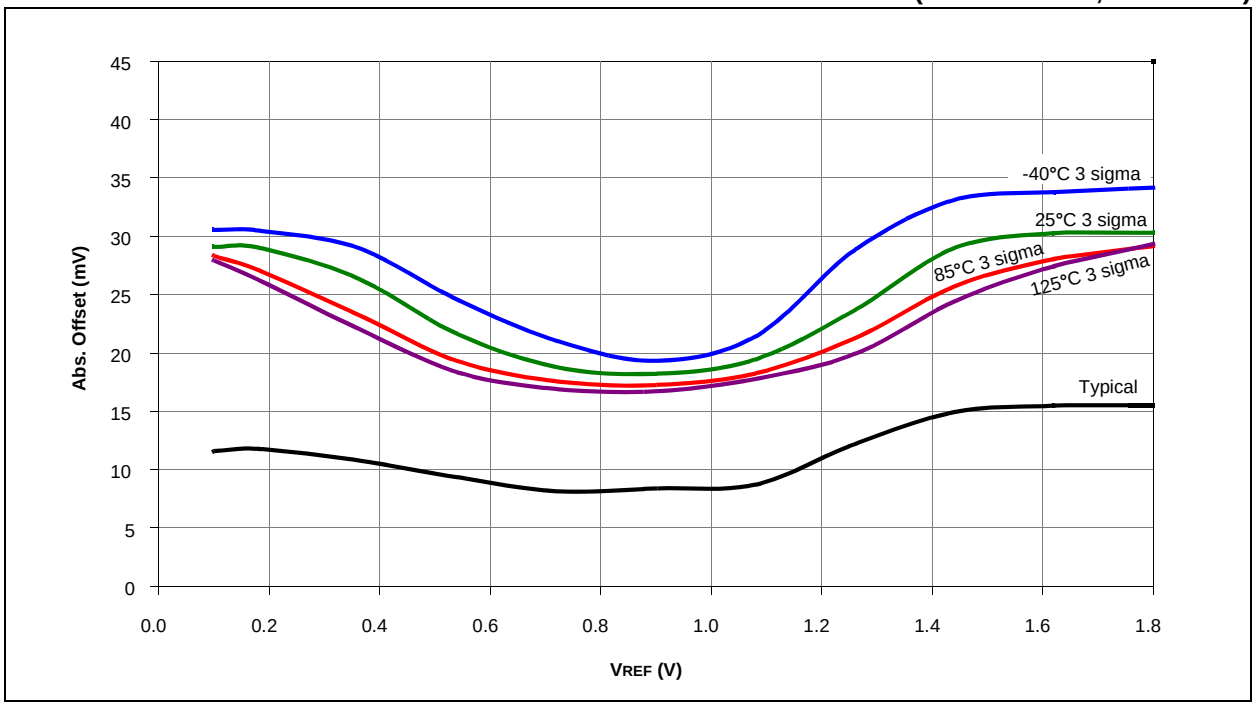

FIGURE 27-32: PIC18F4XK20/PIC18F2XK20 COMPARATOR OFFSET (HIGH POWER, VDD = 3.6V)

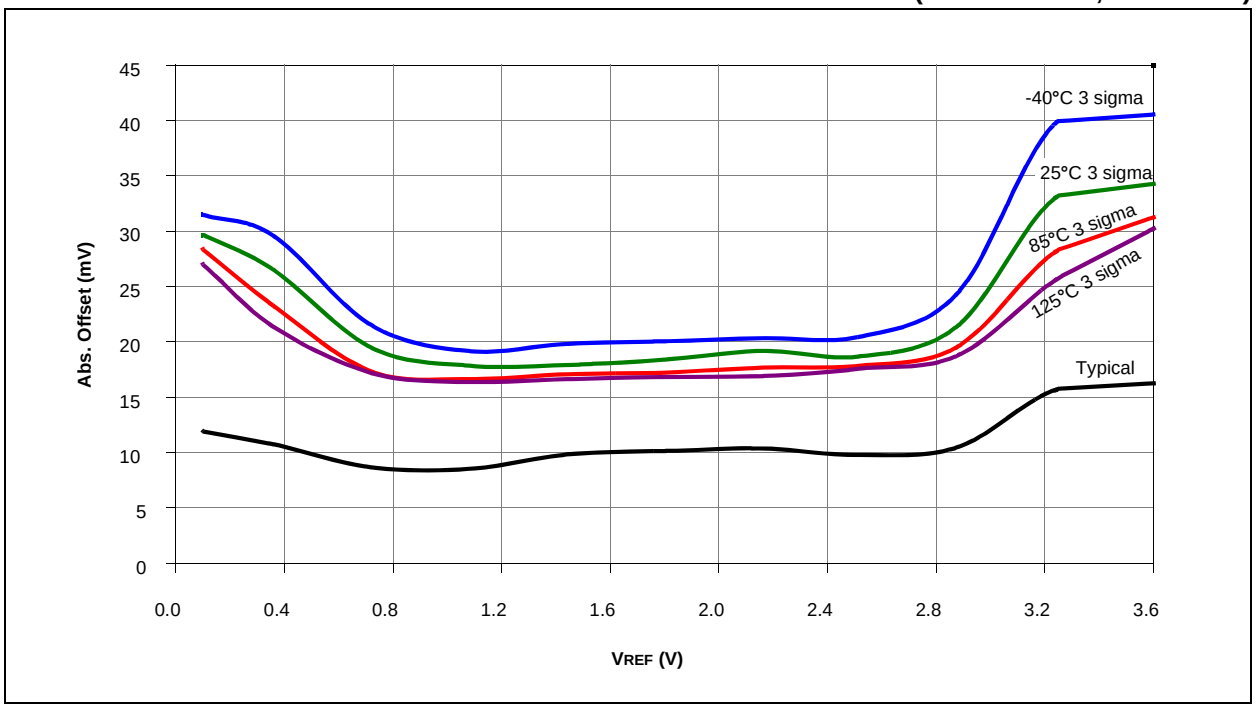

© 2010 Microchip Technology Inc.

FIGURE 27-33: PIC18F4XK20/PIC18F2XK20 TYPICAL FIXED VOLTAGE REFERENCE

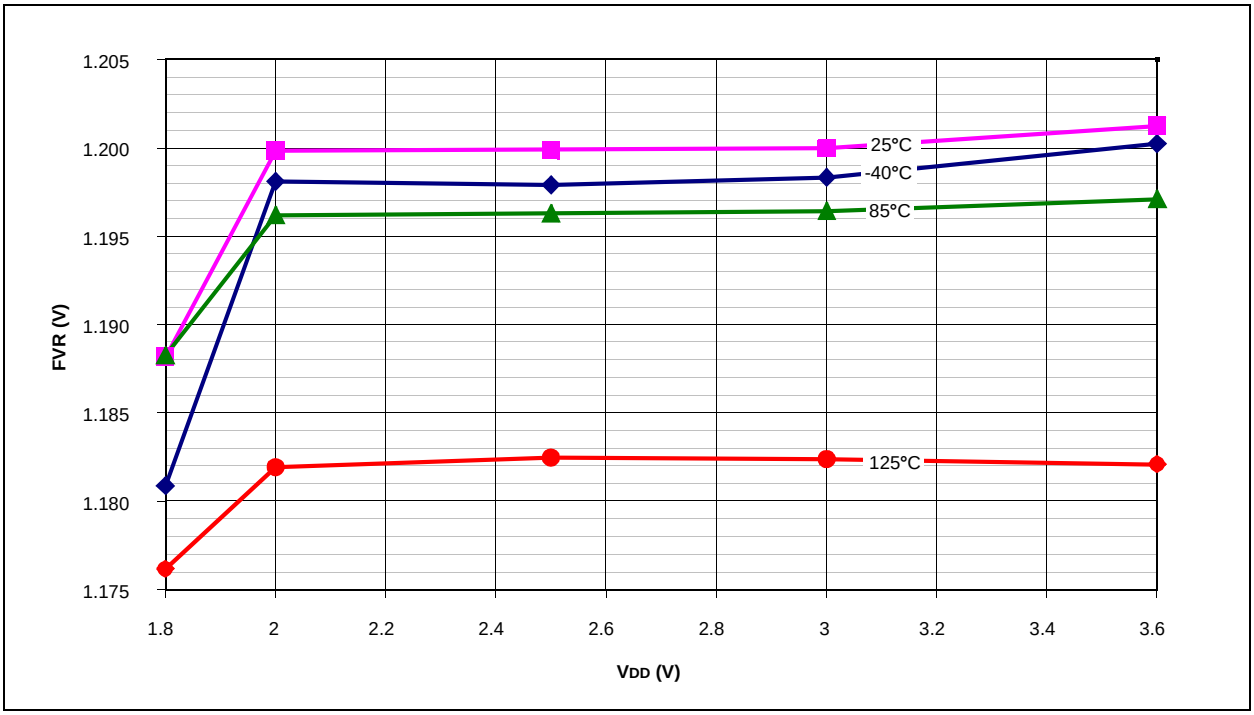

FIGURE 27-34: PIC18F4XK20/PIC18F2XK20 TYPICAL FIXED VOLTAGE REFERENCE (MAX./ MIN. = 1.2V +/- 50MV FROM -40°C TO +85°C)

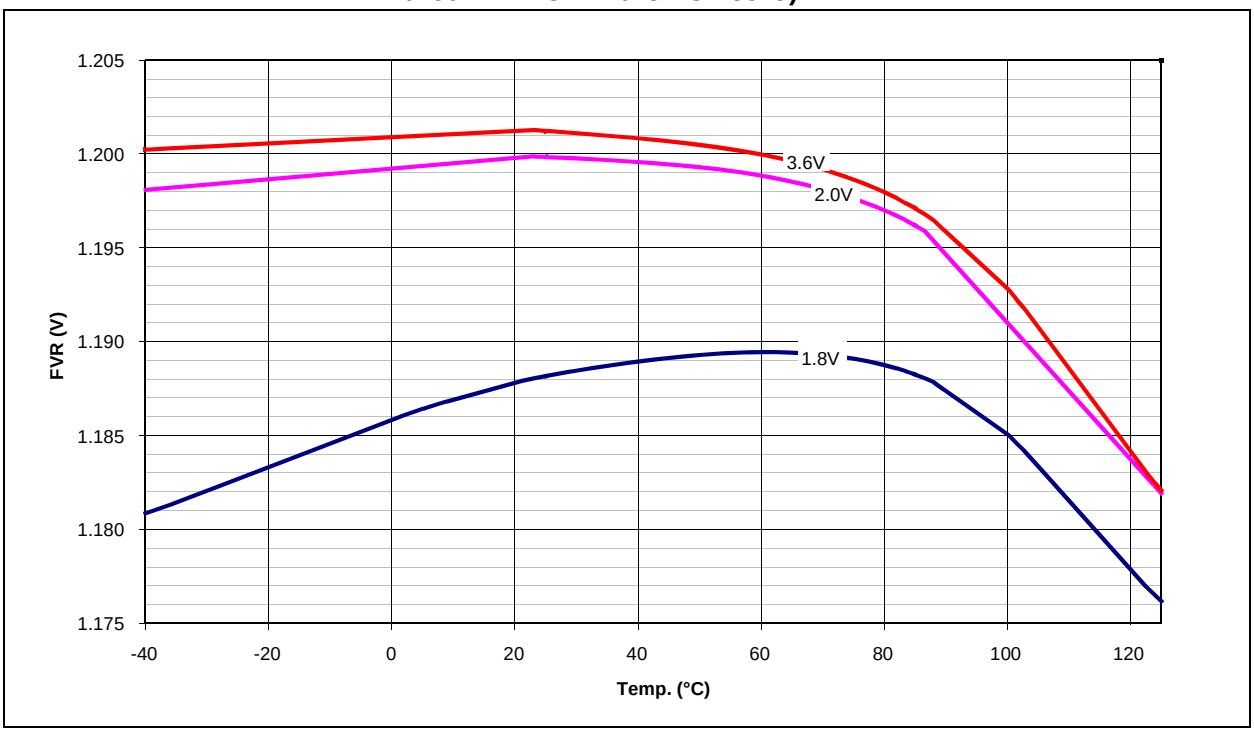

FIGURE 27-35: PIC18F4XK20/PIC18F2XK20 TTL BUFFER VIH

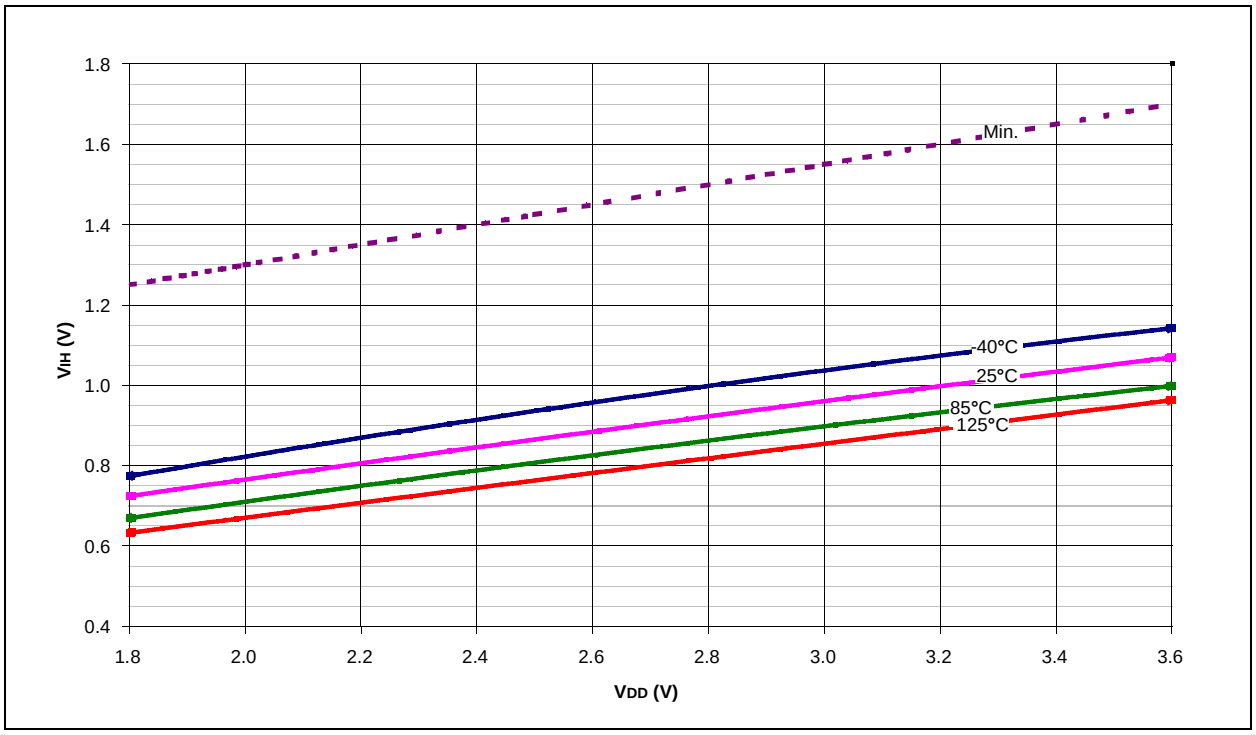

FIGURE 27-36: PIC18F4XK20/PIC18F2XK20 SCHMITT TRIGGER BUFFER VIH

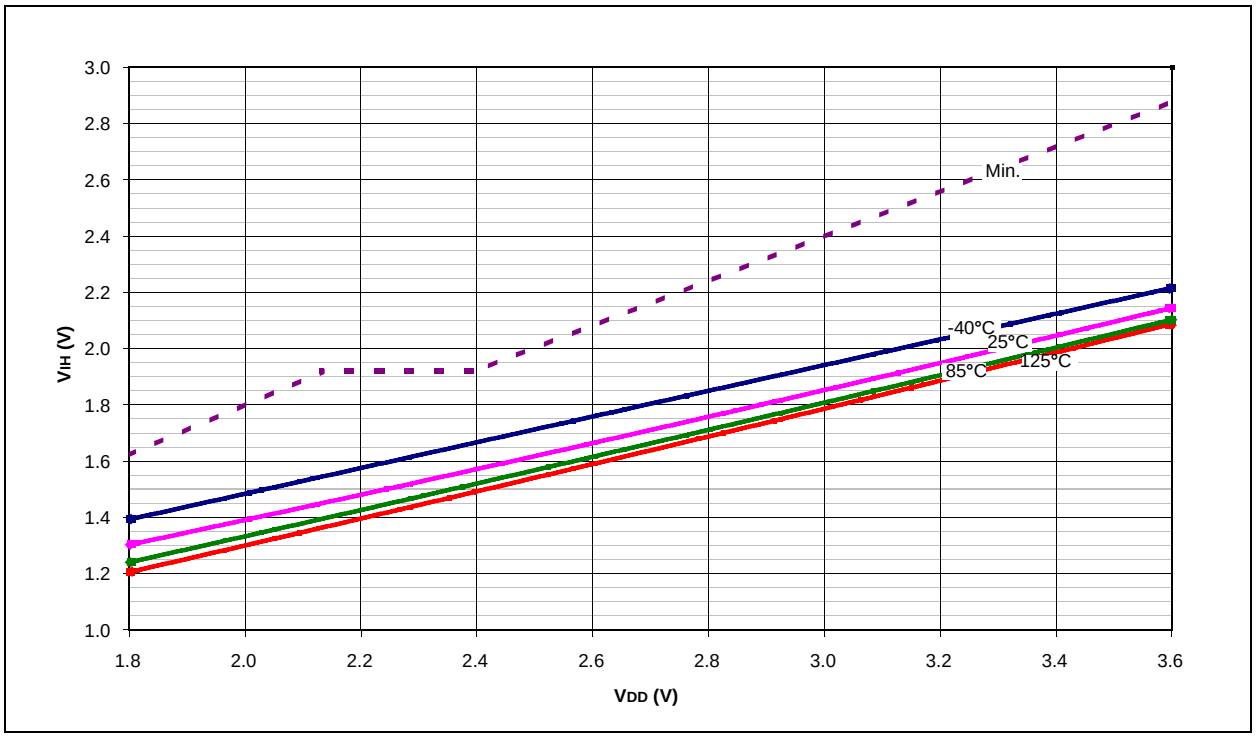

© 2010 Microchip Technology Inc.

FIGURE 27-37: PIC18F4XK20/PIC18F2XK20 TTL BUFFER VIL

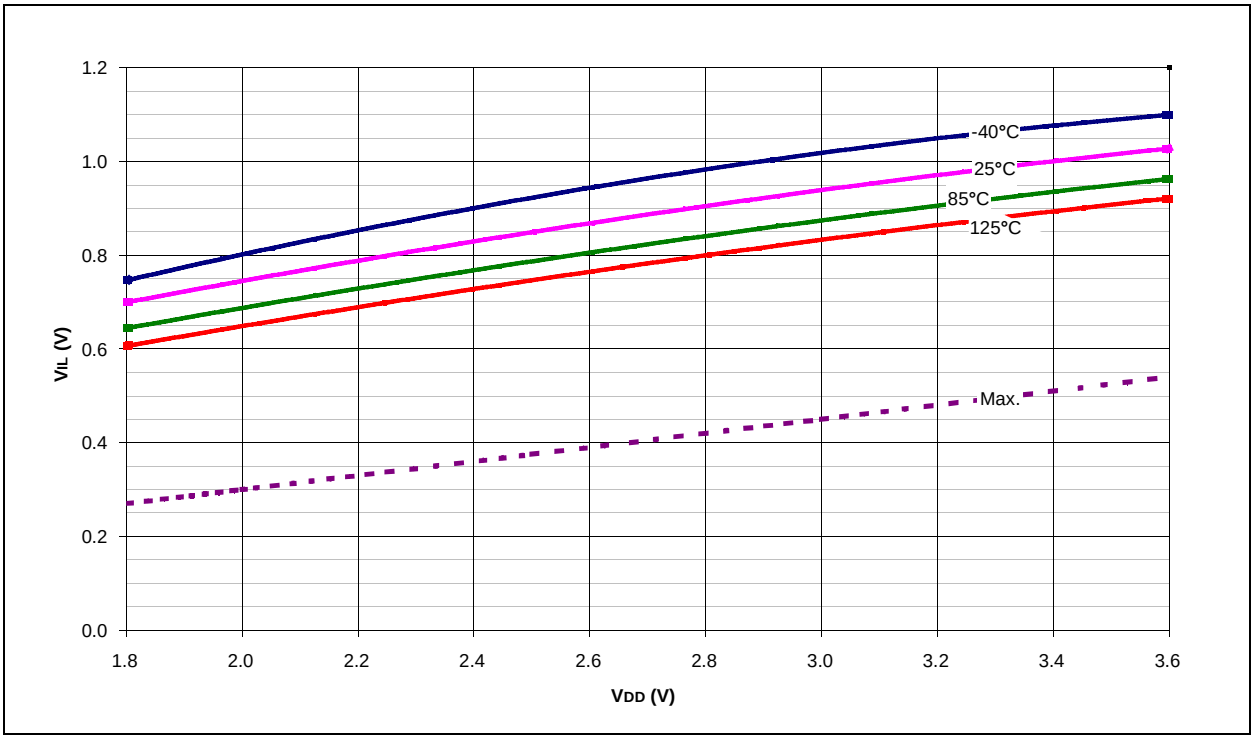

FIGURE 27-38: PIC18F4XK20/PIC18F2XK20 SCHMITT TRIGGER BUFFER VIL

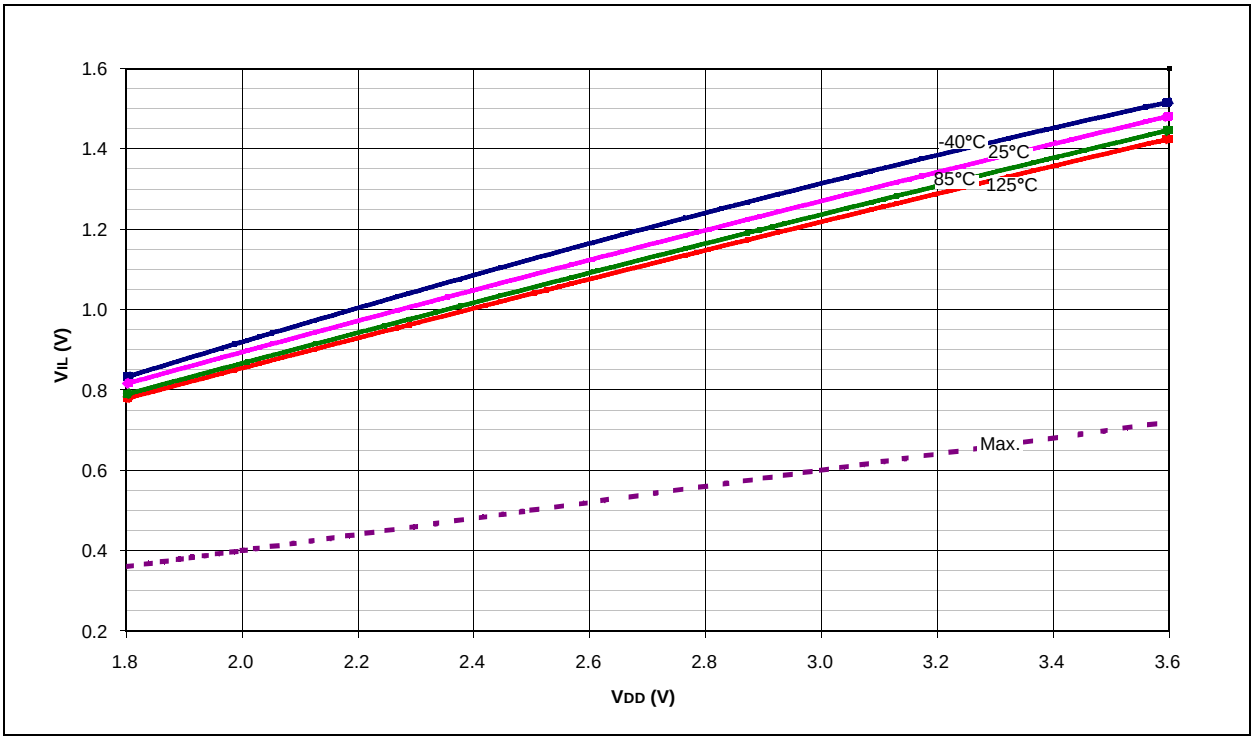

FIGURE 27-39: PIC18F4XK20/PIC18F2XK20 VOH VS. IOH (-40°C TO +125°C)

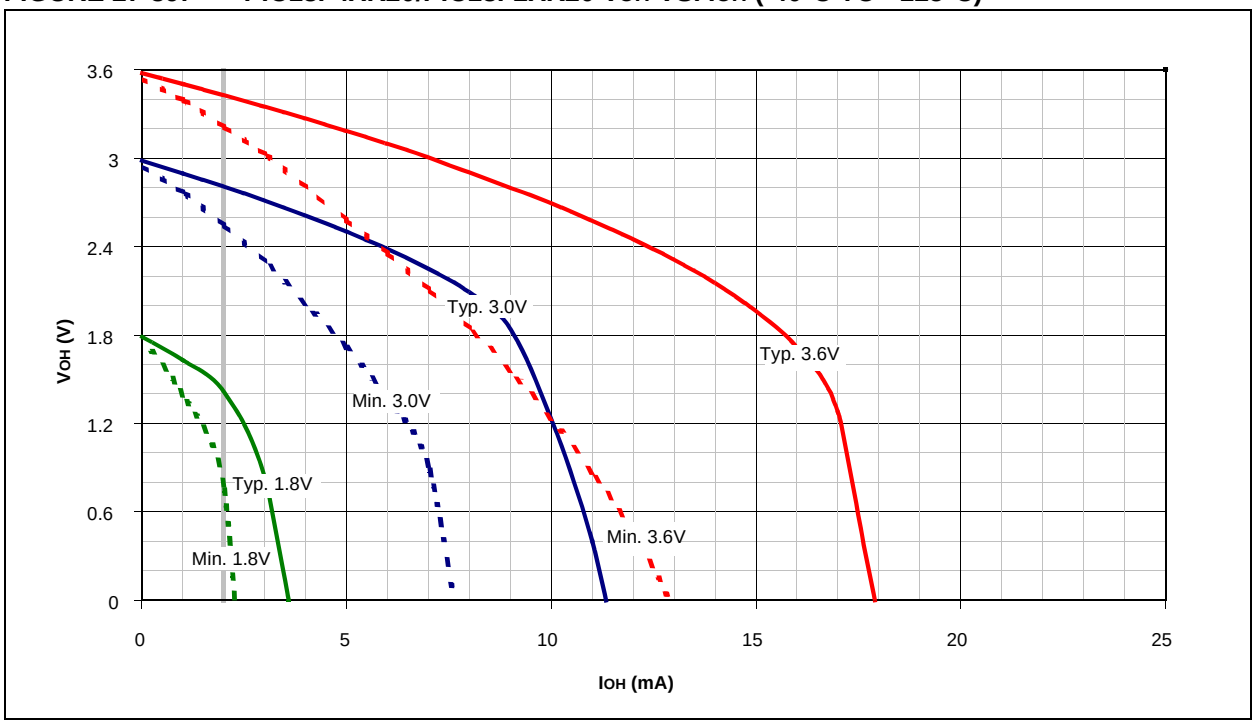

FIGURE 27-40: PIC18F4XK20/PIC18F2XK20 VOL VS. IOL (-40°C TO +125°C)

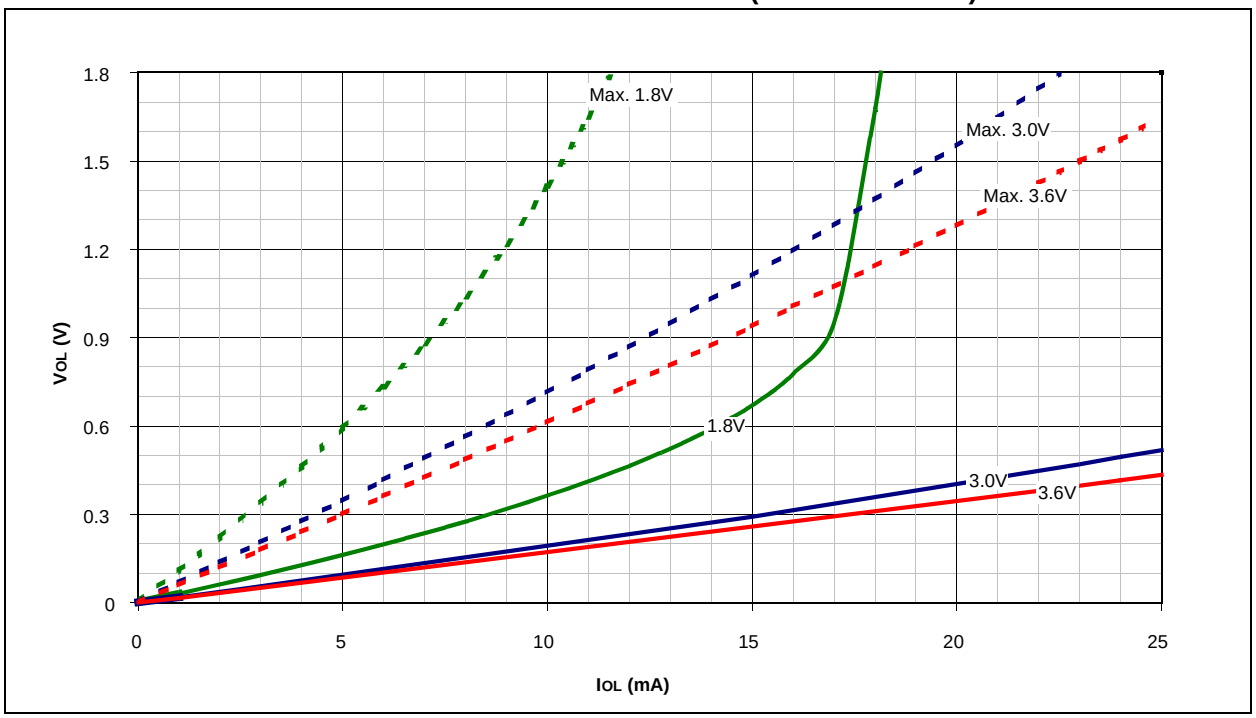

© 2010 Microchip Technology Inc.

FIGURE 27-41: PIC18F4XK20/PIC18F2XK20 PIN INPUT LEAKAGE

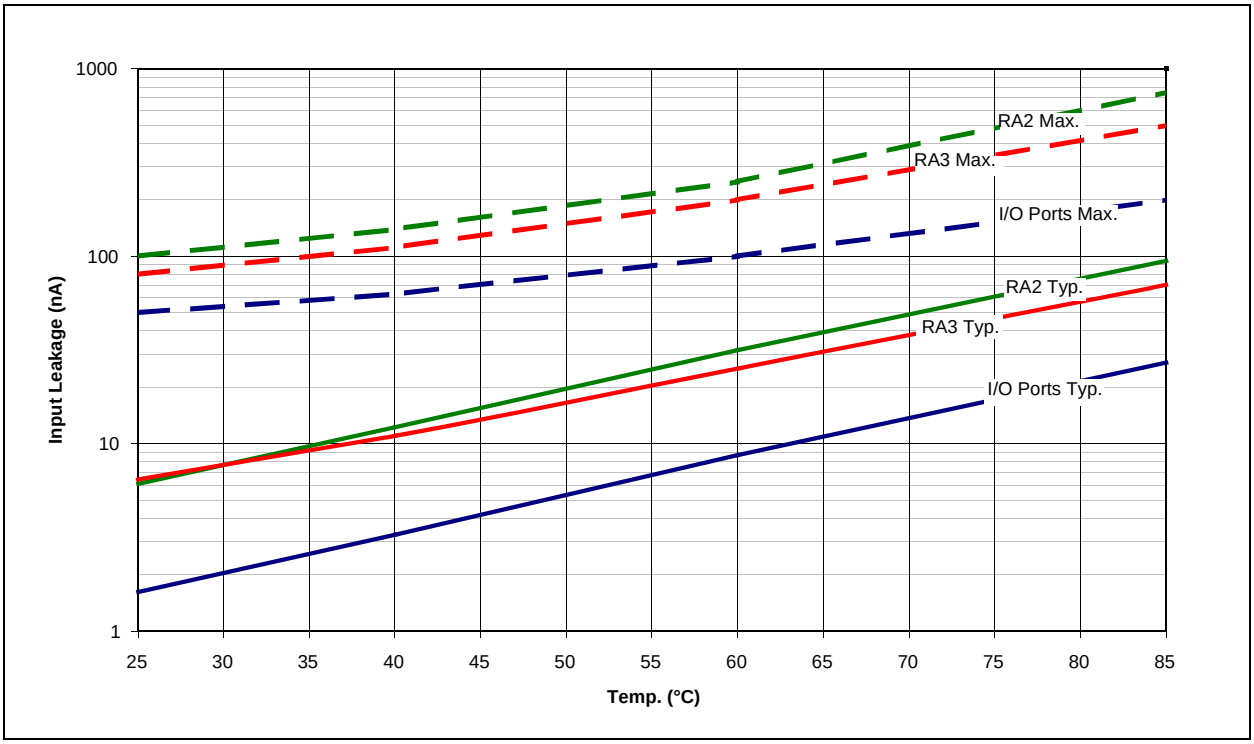

FIGURE 27-42: PIC18F4XK20/PIC18F2XK20 TYPICAL HF-INTOSC FREQUENCY

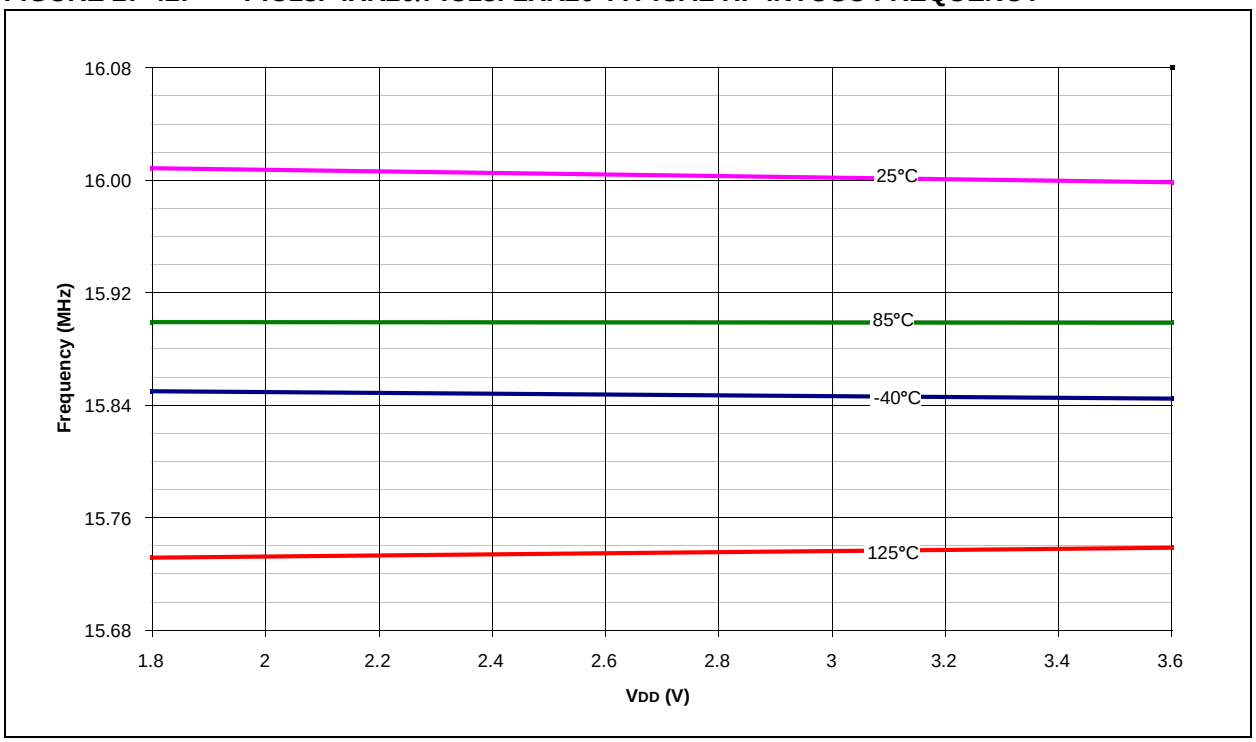

FIGURE 27-43: PIC18F4XK20/PIC18F2XK20 TYPICAL HF-INTOSC FREQUENCY

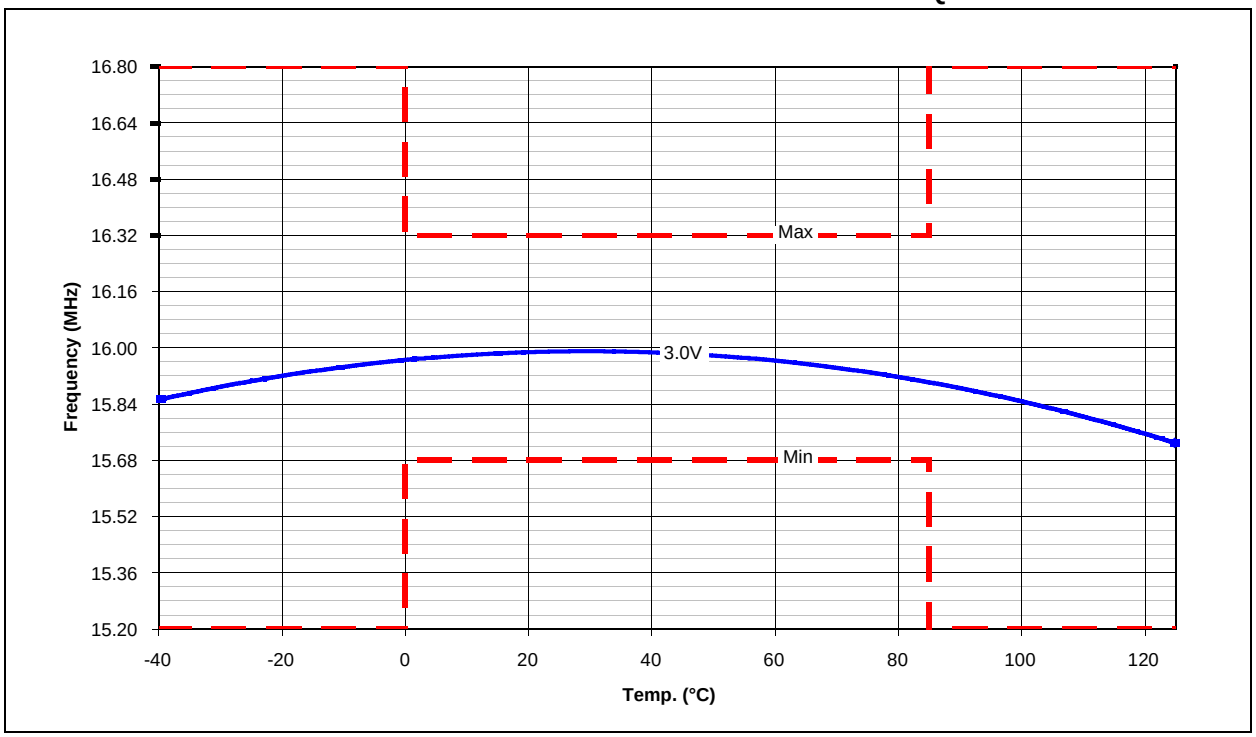

© 2010 Microchip Technology Inc.

FIGURE 27-44: PIC18F4XK20/PIC18F2XK20 TYPICAL LF-INTOSC FREQUENCY (MAX./MIN. = 31.25 KHZ +/-15%)

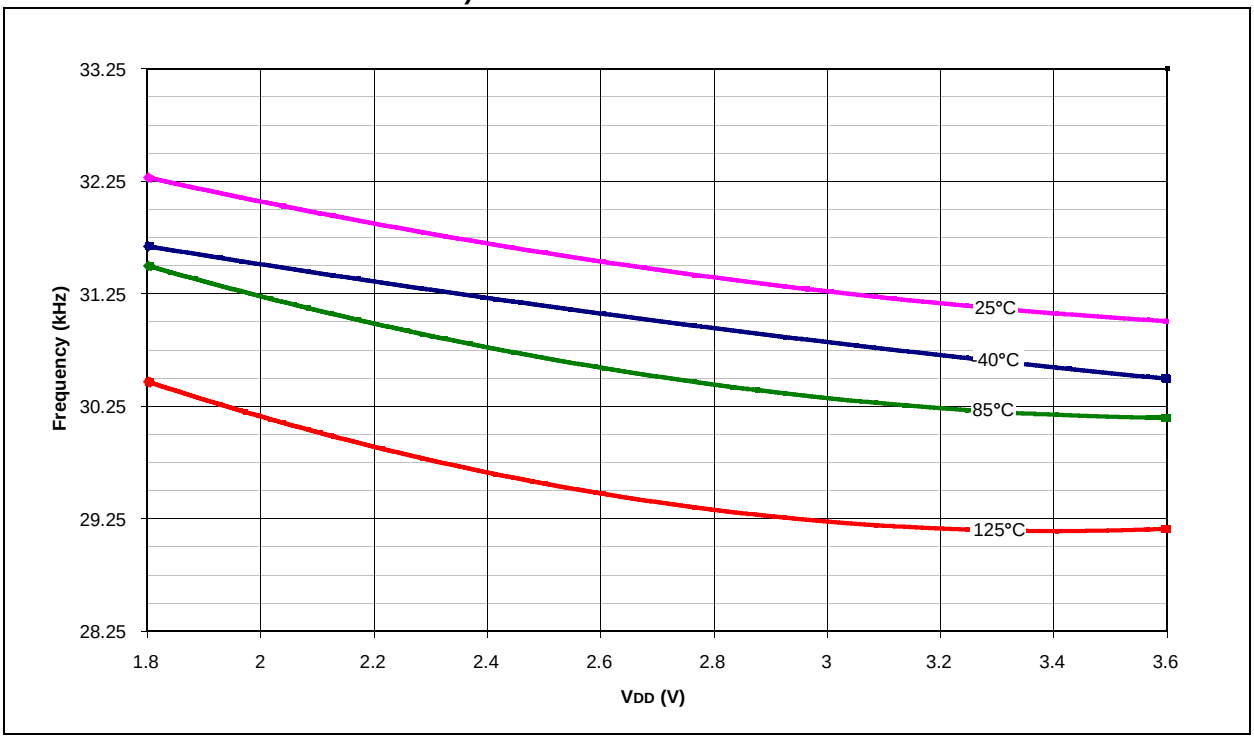

FIGURE 27-45: PIC18F4XK20/PIC18F2XK20 TYPICAL LF-INTOSC FREQUENCY (MAX./MIN. = 31.25 KHZ +/-15%)

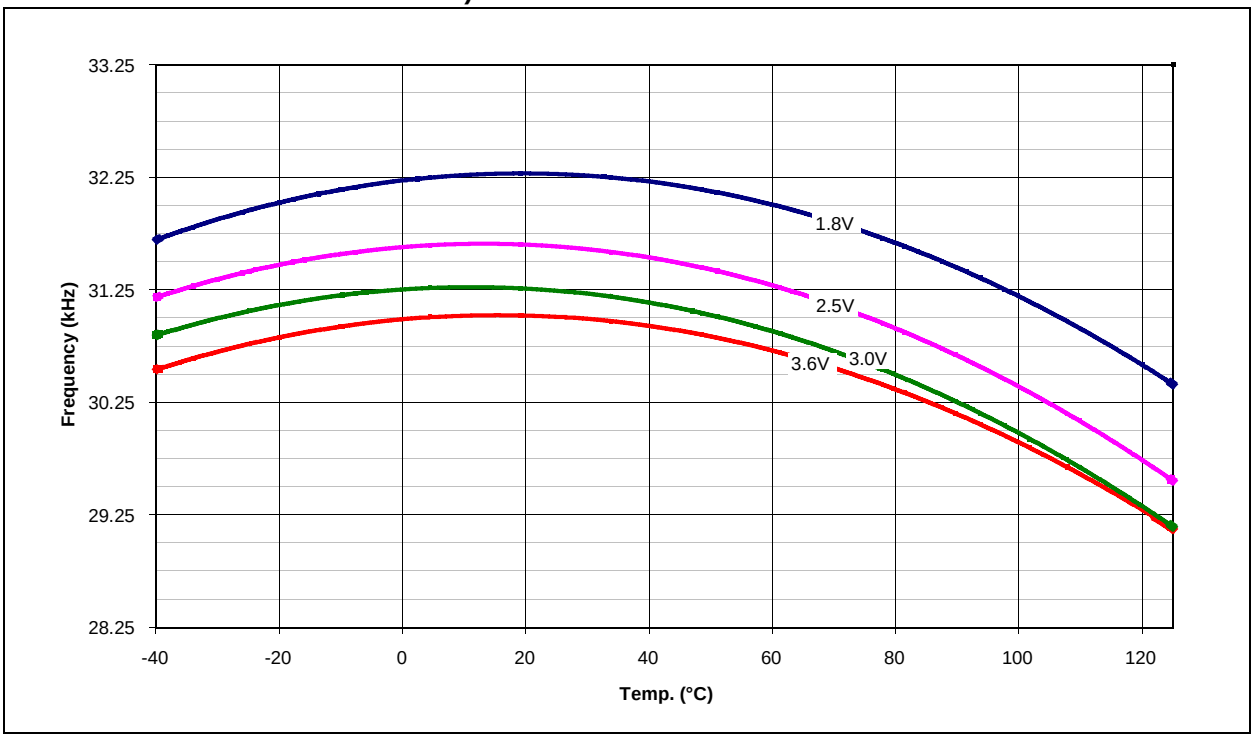

NOTES:

© 2010 Microchip Technology Inc.

28.0 PACKAGING INFORMATION

28.1 Package Marking Information

28-Lead PDIP

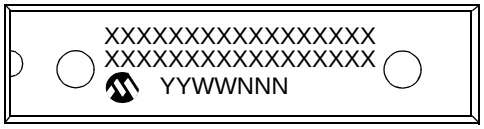

Example

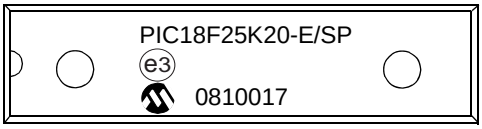

28-Lead SOIC (7.50 mm)

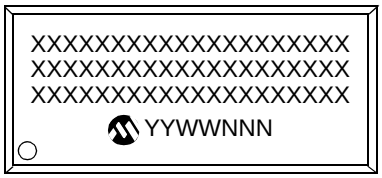

Example

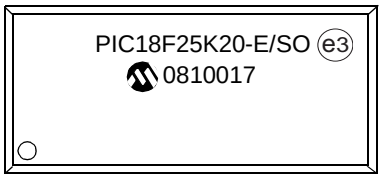

40-Lead PDIP

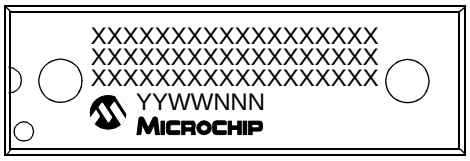

Example

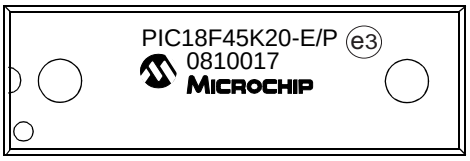

Legend:	XX...X	Customer-specific information
	Y	Year code (last digit of calendar year)
	YY	Year code (last 2 digits of calendar year)
	WW	Week code (week of January 1 is week ‘01’)
	NNN	Alphanumeric traceability code
	(e3)	Pb-free JEDEC designator for Matte Tin (Sn)
	*	This package is Pb-free. The Pb-free JEDEC designator ((e3)) can be found on the outer packaging for this package.

Note: In the event the full Microchip part number cannot be marked on one line, it will be carried over to the next line, thus limiting the number of available characters for customer-specific information.

Package Marking Information (Continued)

28-Lead SSOP

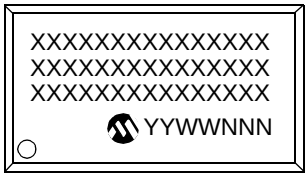

Example

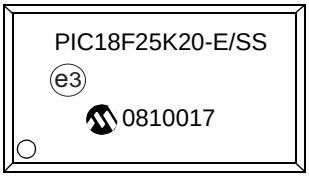

28-Lead QFN



Example



44-Lead QFN

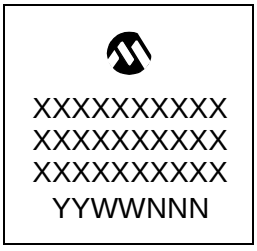

Example



44-Lead TQFP

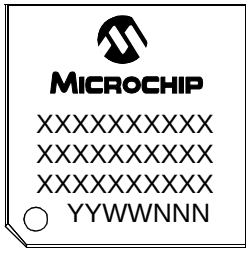

Example

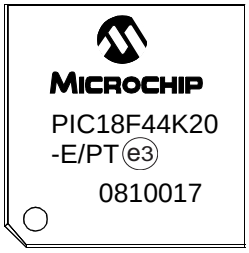

28-Lead UQFN

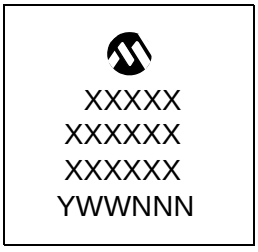

Example

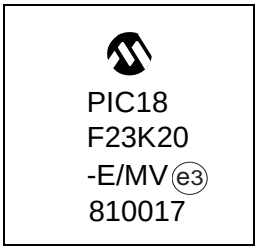

© 2010 Microchip Technology Inc.

28.2 Package Details

The following sections give the technical details of the packages.

28-Lead Skinny Plastic Dual In-Line (SP) – 300 mil Body [SPDIP]

Note: For the most current package drawings, please see the Microchip Packaging Specification located at http://www.microchip.com/packaging

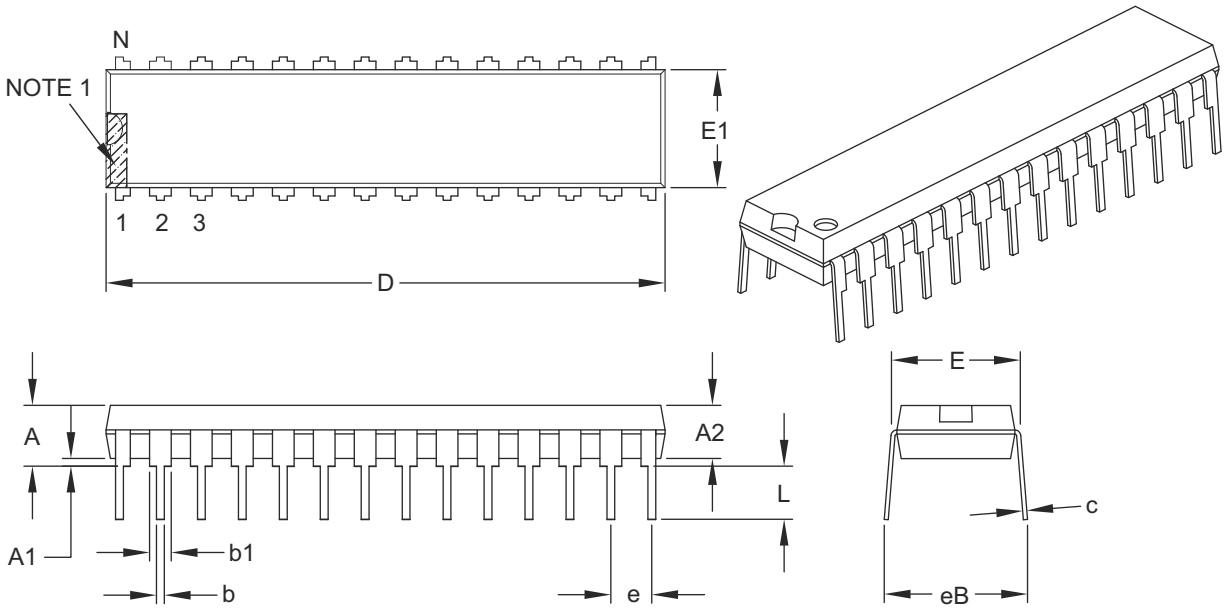

Units		INCHES		
Dimension Limits		MIN	NOM	MAX
Number of Pins	N		28	
Pitch	e		.100 BSC	
Top to Seating Plane	A	–	–	.200
Molded Package Thickness	A2	.120	.135	.150
Base to Seating Plane	A1	.015	–	–
Shoulder to Shoulder Width	E	.290	.310	.335
Molded Package Width	E1	.240	.285	.295
Overall Length	D	1.345	1.365	1.400
Tip to Seating Plane	L	.110	.130	.150
Lead Thickness	c	.008	.010	.015
Upper Lead Width	b1	.040	.050	.070
Lower Lead Width	b	.014	.018	.022
Overall Row Spacing §	eB	–	–	.430

Notes:

1. Pin 1 visual index feature may vary, but must be located within the hatched area.
2. § Significant Characteristic.
3. Dimensions D and E1 do not include mold flash or protrusions. Mold flash or protrusions shall not exceed .010" per side.
4. Dimensioning and tolerancing per ASME Y14.5M.

BSC: Basic Dimension. Theoretically exact value shown without tolerances.

Microchip Technology Drawing C04-070B

28-Lead Plastic Small Outline (SO) – Wide, 7.50 mm Body [SOIC]

Note: For the most current package drawings, please see the Microchip Packaging Specification located at http://www.microchip.com/packaging

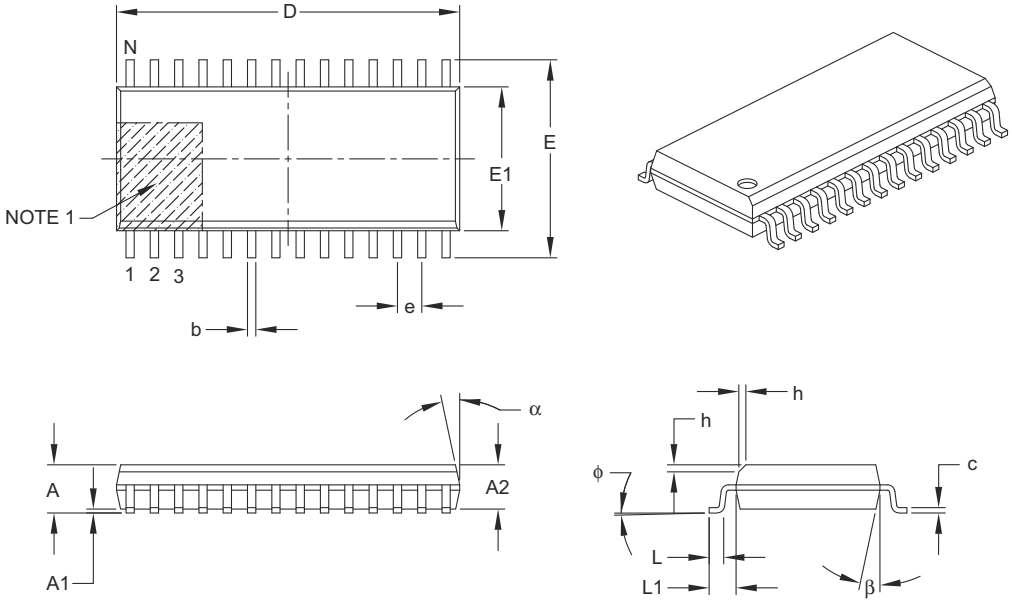

Units		MILLIMETERS		
Dimension Limits		MIN	NOM	MAX
Number of Pins	N		28	
Pitch	e		1.27 BSC	
Overall Height	A	–	–	2.65
Molded Package Thickness	A2	2.05	–	–
Standoff §	A1	0.10	–	0.30
Overall Width	E		10.30 BSC	
Molded Package Width	E1		7.50 BSC	
Overall Length	D		17.90 BSC	
Chamfer (optional)	h	0.25	–	0.75
Foot Length	L	0.40	–	1.27
Footprint	L1		1.40 REF	
Foot Angle Top	ϕ	0°	–	8°
Lead Thickness	c	0.18	–	0.33
Lead Width	b	0.31	–	0.51
Mold Draft Angle Top	α	5°	–	15°
Mold Draft Angle Bottom	β	5°	–	15°

Notes:

1. Pin 1 visual index feature may vary, but must be located within the hatched area.
2. § Significant Characteristic.
3. Dimensions D and E1 do not include mold flash or protrusions. Mold flash or protrusions shall not exceed 0.15 mm per side.
4. Dimensioning and tolerancing per ASME Y14.5M.

   BSC: Basic Dimension. Theoretically exact value shown without tolerances.

   REF: Reference Dimension, usually without tolerance, for information purposes only.

Microchip Technology Drawing C04-052B

© 2010 Microchip Technology Inc.

40-Lead Plastic Dual In-Line (P) – 600 mil Body [PDIP]

Note: For the most current package drawings, please see the Microchip Packaging Specification located at http://www.microchip.com/packaging

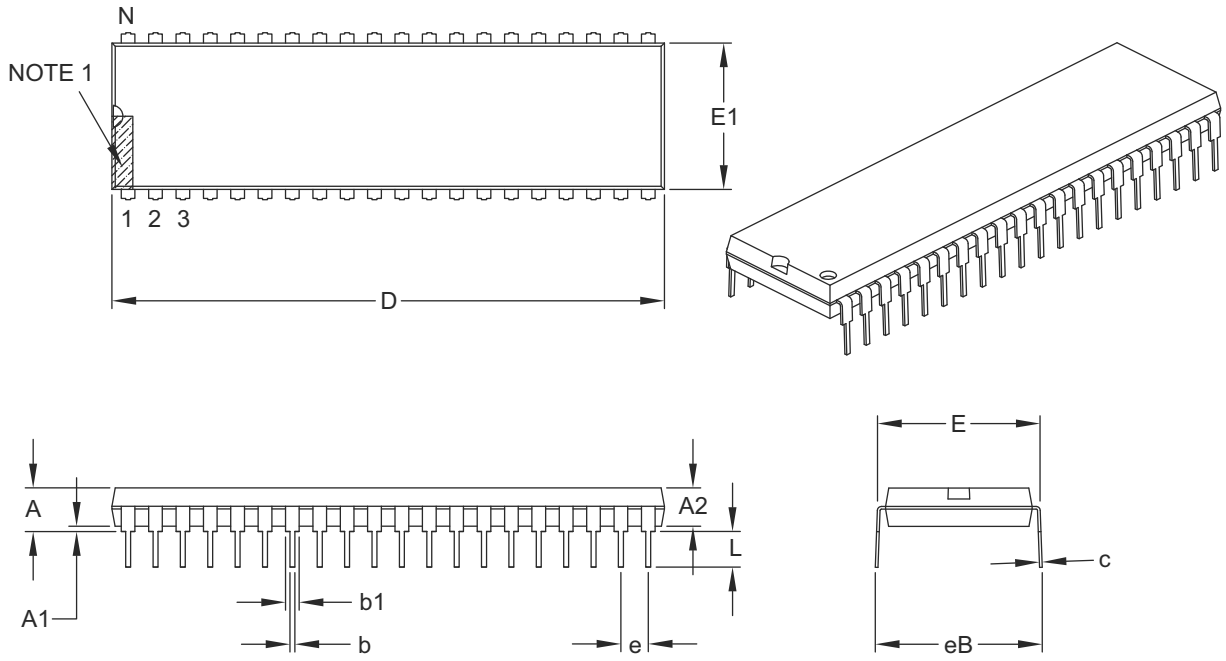

Units		INCHES		
Dimension Limits		MIN	NOM	MAX
Number of Pins	N		40	
Pitch	e		.100 BSC	
Top to Seating Plane	A	–	–	.250
Molded Package Thickness	A2	.125	–	.195
Base to Seating Plane	A1	.015	–	–
Shoulder to Shoulder Width	E	.590	–	.625
Molded Package Width	E1	.485	–	.580
Overall Length	D	1.980	–	2.095
Tip to Seating Plane	L	.115	–	.200
Lead Thickness	c	.008	–	.015
Upper Lead Width	b1	.030	–	.070
Lower Lead Width	b	.014	–	.023
Overall Row Spacing §	eB	–	–	.700

Notes:

1. Pin 1 visual index feature may vary, but must be located within the hatched area.
2. § Significant Characteristic.
3. Dimensions D and E1 do not include mold flash or protrusions. Mold flash or protrusions shall not exceed .010" per side.
4. Dimensioning and tolerancing per ASME Y14.5M.

BSC: Basic Dimension. Theoretically exact value shown without tolerances.

Microchip Technology Drawing C04-016B

28-Lead Plastic Shrink Small Outline (SS) – 5.30 mm Body [SSOP]

Note: For the most current package drawings, please see the Microchip Packaging Specification located at http://www.microchip.com/packaging

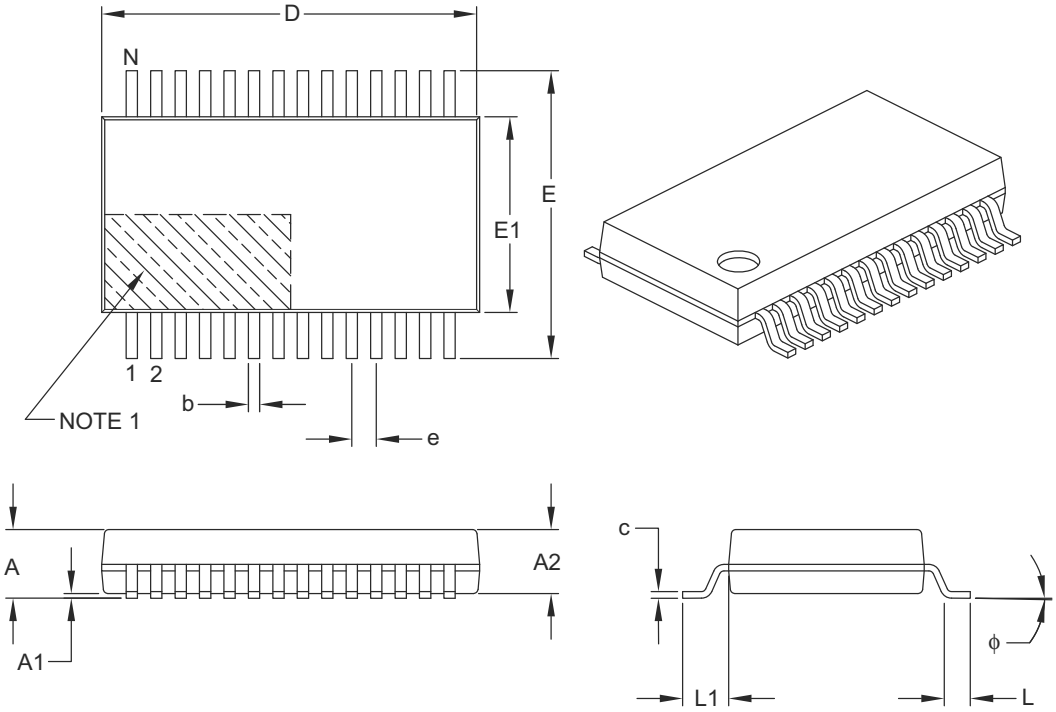

Units		MILLIMETERS		
Dimension Limits		MIN	NOM	MAX
Number of Pins	N		28	
Pitch	e		0.65 BSC	
Overall Height	A	–	–	2.00
Molded Package Thickness	A2	1.65	1.75	1.85
Standoff	A1	0.05	–	–
Overall Width	E	7.40	7.80	8.20
Molded Package Width	E1	5.00	5.30	5.60
Overall Length	D	9.90	10.20	10.50
Foot Length	L	0.55	0.75	0.95
Footprint	L1		1.25 REF	
Lead Thickness	c	0.09	–	0.25
Foot Angle	ϕ	0°	4°	8°
Lead Width	b	0.22	–	0.38

Notes:

1. Pin 1 visual index feature may vary, but must be located within the hatched area.
2. Dimensions D and E1 do not include mold flash or protrusions. Mold flash or protrusions shall not exceed 0.20 mm per side.
3. Dimensioning and tolerancing per ASME Y14.5M.

BSC: Basic Dimension. Theoretically exact value shown without tolerances.
REF: Reference Dimension, usually without tolerance, for information purposes only.

Microchip Technology Drawing C04-073B

© 2010 Microchip Technology Inc.

28-Lead Plastic Quad Flat, No Lead Package (ML) – 6x6 mm Body [QFN] with 0.55 mm Contact Length

Note: For the most current package drawings, please see the Microchip Packaging Specification located at http://www.microchip.com/packaging

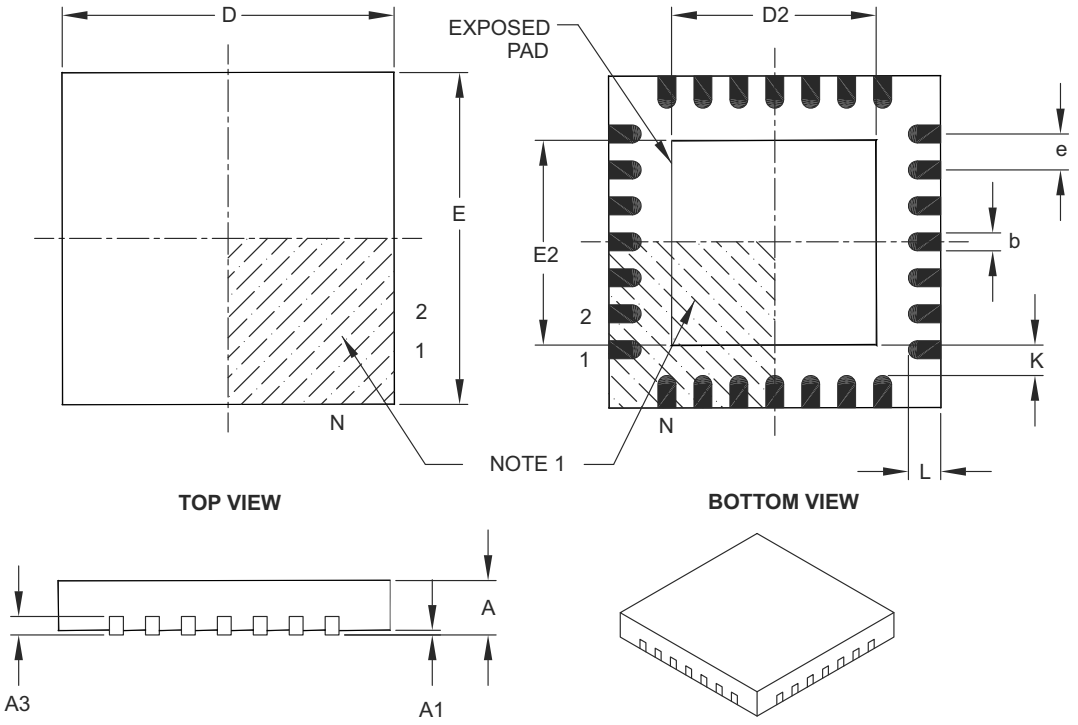

Units		MILLIMETERS		
Dimension Limits		MIN	NOM	MAX
Number of Pins	N		28	
Pitch	e		0.65 BSC	
Overall Height	A	0.80	0.90	1.00
Standoff	A1	0.00	0.02	0.05
Contact Thickness	A3		0.20 REF	
Overall Width	E		6.00 BSC	
Exposed Pad Width	E2	3.65	3.70	4.20
Overall Length	D		6.00 BSC	
Exposed Pad Length	D2	3.65	3.70	4.20
Contact Width	b	0.23	0.30	0.35
Contact Length	L	0.50	0.55	0.70
Contact-to-Exposed Pad	K	0.20	–	–

Notes:

1. Pin 1 visual index feature may vary, but must be located within the hatched area.
2. Package is saw singulated.
3. Dimensioning and tolerancing per ASME Y14.5M.

   BSC: Basic Dimension. Theoretically exact value shown without tolerances.

   REF: Reference Dimension, usually without tolerance, for information purposes only.

Microchip Technology Drawing C04-105B

28-Lead Plastic Quad Flat, No Lead Package (ML) – 6x6 mm Body [QFN] with 0.55 mm Contact Length

Note: For the most current package drawings, please see the Microchip Packaging Specification located at http://www.microchip.com/packaging

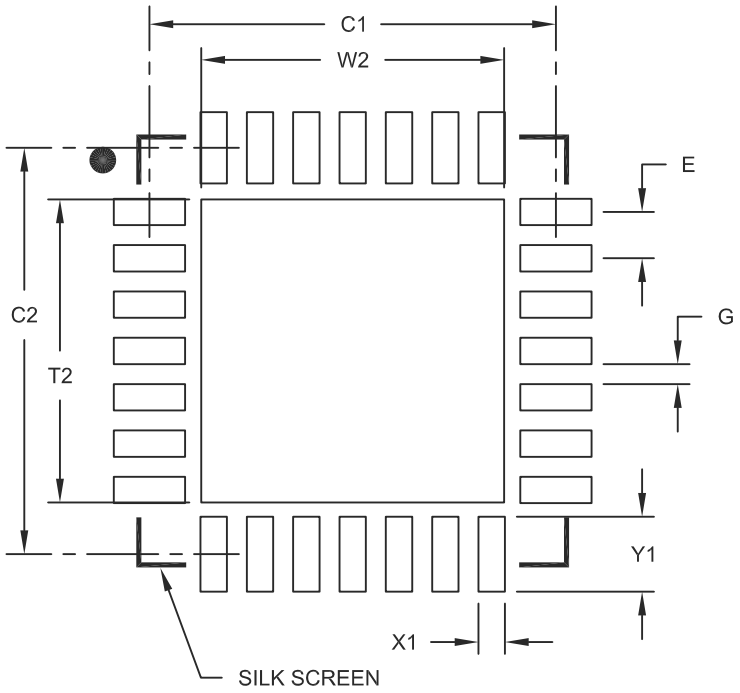

RECOMMENDED LAND PATTERN

Units		MILLIMETERS		
Dimension Limits		MIN	NOM	MAX
Contact Pitch	E		0.65 BSC	
Optional Center Pad Width	W2			4.25
Optional Center Pad Length	T2			4.25
Contact Pad Spacing	C1		5.70	
Contact Pad Spacing	C2		5.70	
Contact Pad Width (X28)	X1			0.37
Contact Pad Length (X28)	Y1			1.00
Distance Between Pads	G	0.20		

Notes:

1. Dimensioning and tolerancing per ASME Y14.5M

BSC: Basic Dimension. Theoretically exact value shown without tolerances.

Microchip Technology Drawing No. C04-2105A

© 2010 Microchip Technology Inc.

28-Lead Plastic Ultra Thin Quad Flat, No Lead Package (MV) – 4x4x0.5 mm Body [UQFN]

Note: For the most current package drawings, please see the Microchip Packaging Specification located at http://www.microchip.com/packaging

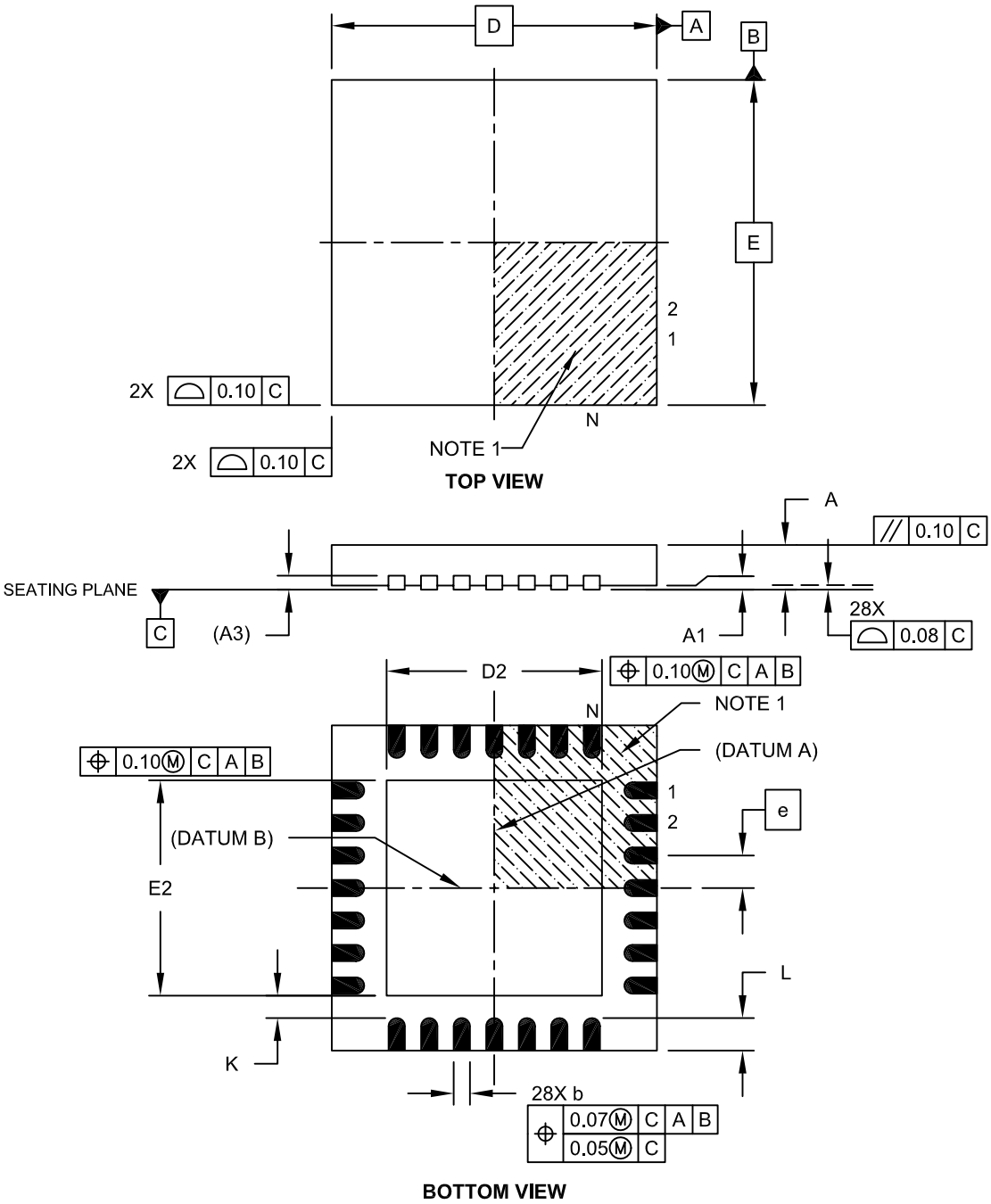

Microchip Technology Drawing C04-152A Sheet 1 of 2

28-Lead Plastic Ultra Thin Quad Flat, No Lead Package (MV) – 4x4x0.5 mm Body [UQFN]

Note: For the most current package drawings, please see the Microchip Packaging Specification located at http://www.microchip.com/packaging

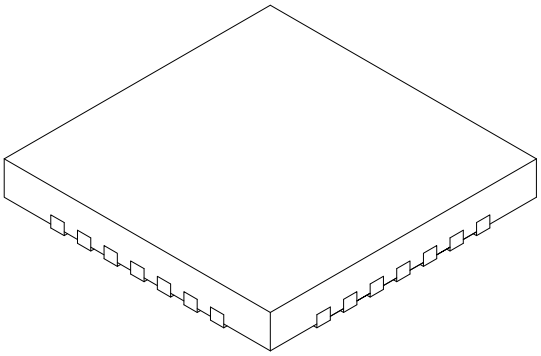

Units		MILLIMETERS		
Dimension Limits		MIN	NOM	MAX
Number of Pins	N		28	
Pitch	e		0.40 BSC	
Overall Height	A	0.45	0.50	0.55
Standoff	A1	0.00	0.02	0.05
Contact Thickness	A3		0.127 REF	
Overall Width	E		4.00 BSC	
Exposed Pad Width	E2	2.55	2.65	2.75
Overall Length	D		4.00 BSC	
Exposed Pad Length	D2	2.55	2.65	2.75
Contact Width	b	0.15	0.20	0.25
Contact Length	L	0.30	0.40	0.50
Contact-to-Exposed Pad	K	0.20	-	-

Notes:

1. Pin 1 visual index feature may vary, but must be located within the hatched area.
2. Package is saw singulated.
3. Dimensioning and tolerancing per ASME Y14.5M.

BSC: Basic Dimension. Theoretically exact value shown without tolerances.
REF: Reference Dimension, usually without tolerance, for information purposes only.

Microchip Technology Drawing C04-152A Sheet 2 of 2

© 2010 Microchip Technology Inc.

44-Lead Plastic Quad Flat, No Lead Package (ML) – 8x8 mm Body [QFN]

Note: For the most current package drawings, please see the Microchip Packaging Specification located at http://www.microchip.com/packaging

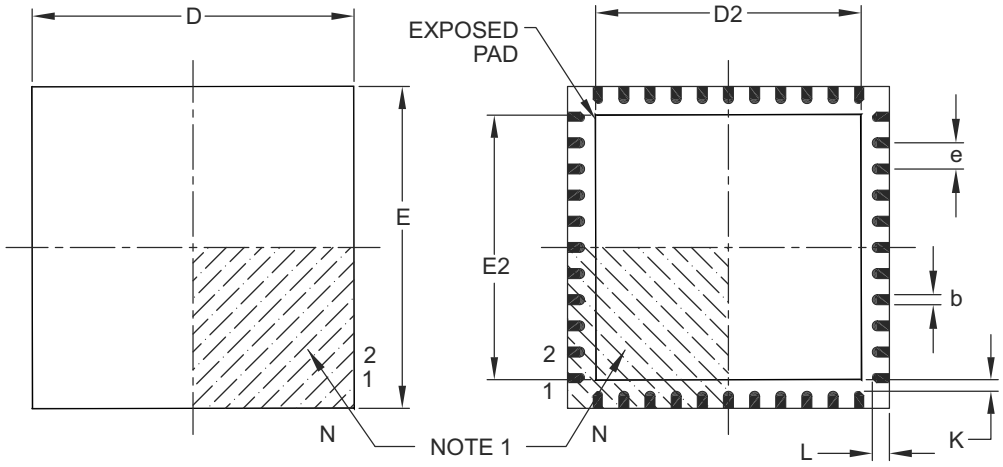

TOP VIEW **BOTTOM VIEW**

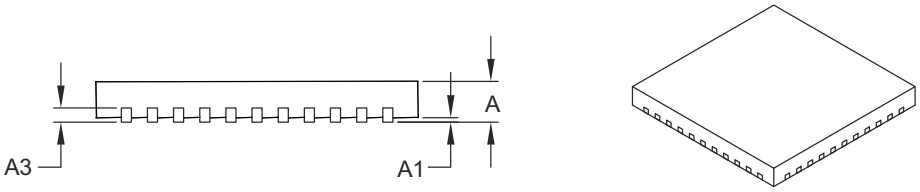

Units		MILLIMETERS		
Dimension Limits		MIN	NOM	MAX
Number of Pins	N		44	
Pitch	e		0.65 BSC	
Overall Height	A	0.80	0.90	1.00
Standoff	A1	0.00	0.02	0.05
Contact Thickness	A3		0.20 REF	
Overall Width	E		8.00 BSC	
Exposed Pad Width	E2	6.30	6.45	6.80
Overall Length	D		8.00 BSC	
Exposed Pad Length	D2	6.30	6.45	6.80
Contact Width	b	0.25	0.30	0.38
Contact Length	L	0.30	0.40	0.50
Contact-to-Exposed Pad	K	0.20	–	–

Notes:

1. Pin 1 visual index feature may vary, but must be located within the hatched area.
2. Package is saw singulated.
3. Dimensioning and tolerancing per ASME Y14.5M.

BSC: Basic Dimension. Theoretically exact value shown without tolerances.
REF: Reference Dimension, usually without tolerance, for information purposes only.

Microchip Technology Drawing C04-103B

44-Lead Plastic Quad Flat, No Lead Package (ML) – 8x8 mm Body [QFN]

Note: For the most current package drawings, please see the Microchip Packaging Specification located at http://www.microchip.com/packaging

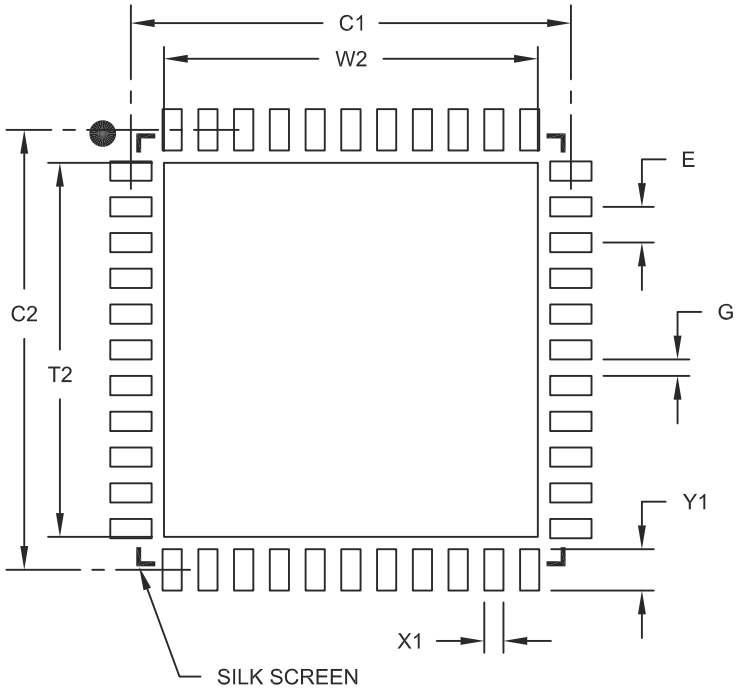

RECOMMENDED LAND PATTERN

Units		MILLIMETERS		
Dimension Limits		MIN	NOM	MAX
Contact Pitch	E		0.65 BSC	
Optional Center Pad Width	W2			6.80
Optional Center Pad Length	T2			6.80
Contact Pad Spacing	C1		8.00	
Contact Pad Spacing	C2		8.00	
Contact Pad Width (X44)	X1			0.35
Contact Pad Length (X44)	Y1			0.80
Distance Between Pads	G	0.25		

Notes:

1. Dimensioning and tolerancing per ASME Y14.5M

BSC: Basic Dimension. Theoretically exact value shown without tolerances.

Microchip Technology Drawing No. C04-2103A

© 2010 Microchip Technology Inc.

44-Lead Plastic Thin Quad Flatpack (PT) – 10x10x1 mm Body, 2.00 mm [TQFP]

Note: For the most current package drawings, please see the Microchip Packaging Specification located at http://www.microchip.com/packaging

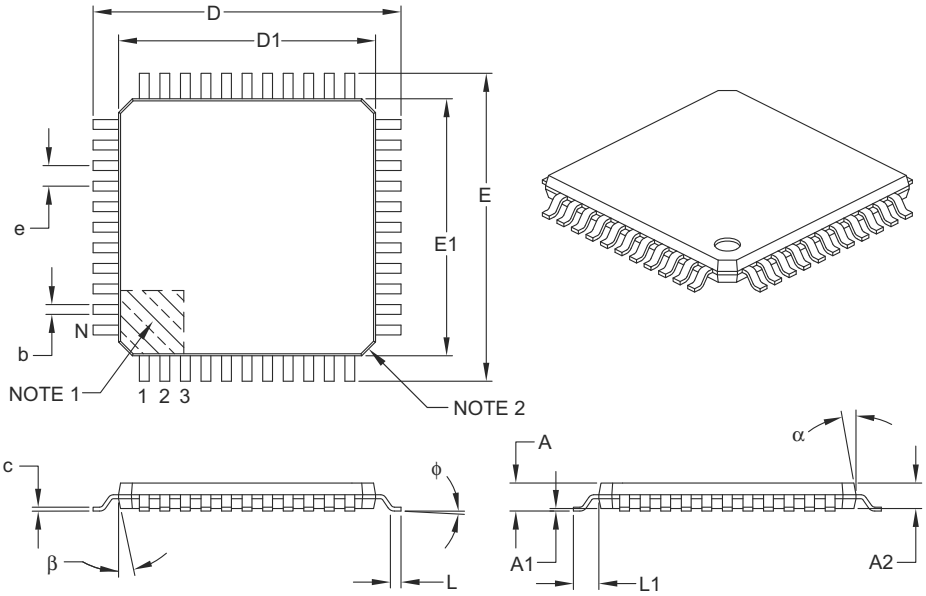

Units		MILLIMETERS		
Dimension Limits		MIN	NOM	MAX
Number of Leads	N		44	
Lead Pitch	e		0.80 BSC	
Overall Height	A	–	–	1.20
Molded Package Thickness	A2	0.95	1.00	1.05
Standoff	A1	0.05	–	0.15
Foot Length	L	0.45	0.60	0.75
Footprint	L1		1.00 REF	
Foot Angle	φ	0°	3.5°	7°
Overall Width	E		12.00 BSC	
Overall Length	D		12.00 BSC	
Molded Package Width	E1		10.00 BSC	
Molded Package Length	D1		10.00 BSC	
Lead Thickness	c	0.09	–	0.20
Lead Width	b	0.30	0.37	0.45
Mold Draft Angle Top	α	11°	12°	13°
Mold Draft Angle Bottom	β	11°	12°	13°

Notes:

1. Pin 1 visual index feature may vary, but must be located within the hatched area.
2. Chamfers at corners are optional; size may vary.
3. Dimensions D1 and E1 do not include mold flash or protrusions. Mold flash or protrusions shall not exceed 0.25 mm per side.
4. Dimensioning and tolerancing per ASME Y14.5M.

BSC: Basic Dimension. Theoretically exact value shown without tolerances.

REF: Reference Dimension, usually without tolerance, for information purposes only.

Microchip Technology Drawing C04-076B

44-Lead Plastic Thin Quad Flatpack (PT) – 10x10x1 mm Body, 2.00 mm [TQFP]

Note: For the most current package drawings, please see the Microchip Packaging Specification located at http://www.microchip.com/packaging

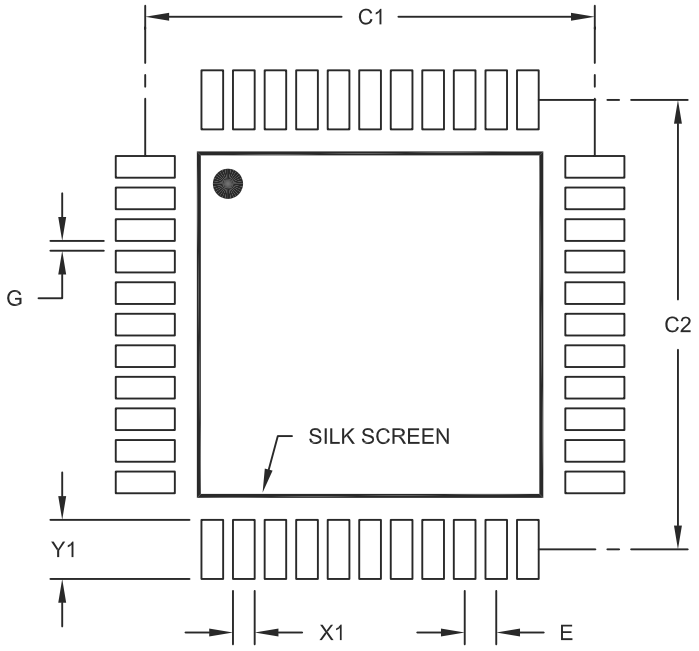

RECOMMENDED LAND PATTERN

Units		MILLIMETERS		
Dimension Limits		MIN	NOM	MAX
Contact Pitch	E		0.80 BSC	
Contact Pad Spacing	C1		11.40	
Contact Pad Spacing	C2		11.40	
Contact Pad Width (X44)	X1			0.55
Contact Pad Length (X44)	Y1			1.50
Distance Between Pads	G	0.25		

Notes:

1. Dimensioning and tolerancing per ASME Y14.5M

BSC: Basic Dimension. Theoretically exact value shown without tolerances.

Microchip Technology Drawing No. C04-2076A

© 2010 Microchip Technology Inc.

APPENDIX A: REVISION HISTORY

Revision A (07/2006)

Original data sheet for PIC18F2XK20/4XK20 devices.

Revision B (03/2007)

Added part numbers PIC18F26K20 and PIC18F46K20; Replaced Development Support Section; Replaced Package Drawings.

Revision C (10/2007)

Revised Table 1, DIL Pins 34 and 35; Table 2, Pins 22 and 24; Table 1-2, Pins RB1 and RB3; Table 1-3, Pins RB1 and RB3; Revised Sections 4.3, 4.4, 4.4.1, 4.4.2, 4.4.4; Revised Table 4-3, Note 2; Revised Table 6-1; Revise Section 7.8: Revised Section 9.2; Revised Examples 10-1 and 10-2; Revised Table 10-3, Pins RB1 and RB3; Revised Sections 12.2 through 12.5; Revised Register 16-1, bit 3-0; Revised Sections 16.1, 16.2, 16.4.4; Revised Register 16-2, bit 6-4; Revised Table 16-2, Note 2; Revised Register 17-1, bit 6; Revised Register 17-3; Revised Table 17-4; Revised Register 19-1, added Note 2; Revised Register 20-3, bits 5 and 4; Revised Register 23-4, bit 1; Revised Register 23-12, bit 7-5; Revised Section 23.3; Revised Section 24.1.1, instruction set descriptions; Revised Section 26.0, voltage on $\overline{MCLR}$; Revised DC Characteristics 26.2, 26.3, 26.4 26.5, 26.6, 26.7, 26.8 and 26.10; Revised Tables 26-1, 26-6, 26-7, 26-9, 26-23.

Revision D (08/2008)

Update to Peripheral Highlights (USART module); Deleted Section 2.2.6 (Oscillator Transitions); Revised Sections 2.5.3, 2.9; Added Section 2.9.3 (Clock Switch Timing); Deleted Section 2.10.4 (Clock Switching Timing); Replaced BAUDCTL with BAUDCON throughout; Revised Table 5-2 (PLUSW0, PLUSW1, PLUSW2); Add Note 1 to Table 7-1 (EEADRH); Revised Section 6.4.4 and Register 16-2 (FLT0 pin); Revised Registers 17-2 and 17-5 (SSPEN); Revised Register 17-6 (SEN); Added new paragraph after Figure 18-2; Revised Note, Section 18.1.1; Deleted Note, Section 18.1.2; Added new Note 2, Sections 18.1.2.9 and 18.1.2.10; Revised Note 1, Section 18.3.1; Added Section 18.3.2; Revised Section 18.3.5; Added new Note 2, Sections 18.4.1.5, 18.4.1.10, 18.4.2.2, 18.4.2.4; Revised Register 21-1 (CVR); Revised Note 1, Registers 23-6, 23.8, 23-10, Table 23-3; Added new Figure 26-1; Revised 26.2, 26.6, 26.7 (Note 3), 26.8, 26.9, 26.10; Revised Tables 26-1, 26-2, 26-3, 26-6, 26-7, 26-8, 26-25; Updated Package Drawings.

Revision E (04/2009)

Revised data sheet title; Revised Power-Managed Modes, Peripheral Highlights, and Analog Features; Revised 26.2, DC Char. table.

Revision F (09/2009)

Changed the values in the “Extreme Low-Power Management with nanoWatt XLP” section; Added new Note 2 to Pin Diagrams; Updated Electrical Characteristics section; Added charts to the DS Characteristics section; Removed Preliminary label; Added UQFN to Pin Diagrams; Added the 28-pin UQFN to Table 3-1; Updated MSSP section (Register 17-3; changing SSPADD<6:0> to SSPADD<7:0>); Updated the Development Support section deleting section 25.7; Added the 28-Lead UQFN package marking diagrams and the 28-Lead Plastic Ultra Thin Quad Flat, No Lead Package (MV) - 4X4X0.5 mm Body (UQFN) package to Packaging Information section; Other minor corrections.

Revision G (01/2010)

Updated Figure 9-1; Reviewed Section 26 (Electrical Characteristics); Added Figures 27-29, 27-30, 27-31 and 27-32 to Section 27 (DC and AC Characteristics Graphs and Tables); Reviewed Product Identification System section.

APPENDIX B: DEVICE DIFFERENCES

The differences between the devices listed in this data sheet are shown in Table B-1.

TABLE B-1: DEVICE DIFFERENCES

Features	PIC18F23K20	PIC18F24K20	PIC18F25K20	PIC18F26K20	PIC18F43K20	PIC18F44K20	PIC18F45K20	PIC18F46K20
Program Memory (Bytes)	8192	16384	32768	65536	8192	16384	32768	65536
Program Memory (Instructions)	4096	8192	16384	32768	4096	8192	16384	32768
Interrupt Sources	19	19	19	19	20	20	20	20
I/O Ports	Ports A, B, C, (E)	Ports A, B, C, (E)	Ports A, B, C, (E)	Ports A, B, C, (E)	Ports A, B, C, D, E	Ports A, B, C, D, E	Ports A, B, C, D, E	Ports A, B, C, D, E
Capture/Compare/PWM Modules	1	1	1	1	1	1	1	1
Enhanced Capture/Compare/PWM Modules	1	1	1	1	1	1	1	1
Parallel Communications (PSP)	No	No	No	No	Yes	Yes	Yes	Yes
10-bit Analog-to-Digital Module	11 input channels	11 input channels	11 input channels	11 input channels	14 input channels	14 input channels	14 input channels	14 input channels
Packages	28-pin PDIP 28-pin SOIC 28-pin SSOP 28-pin QFN 28-pin UQFN	28-pin PDIP 28-pin SOIC 28-pin SSOP 28-pin QFN	28-pin PDIP 28-pin SOIC 28-pin SSOP 28-pin QFN	28-pin PDIP 28-pin SOIC 28-pin SSOP 28-pin QFN	40-pin PDIP 44-pin TQFP 44-pin QFN	40-pin PDIP 44-pin TQFP 44-pin QFN	40-pin PDIP 44-pin TQFP 44-pin QFN	40-pin PDIP 44-pin TQFP 44-pin QFN

© 2010 Microchip Technology Inc.

INDEX

A

A/D
- Analog Port Pins, Configuring ... 277
- Associated Registers ... 277
- Conversions ... 268
- Converter Characteristics ... 401
- Discharge ... 269
- Selecting and Configuring Acquisition Time ... 266
- Special Event Trigger (ECCP) ... 174

Absolute Maximum Ratings ... 369
AC (Timing) Characteristics ... 383
- Load Conditions for Device Timing Specifications ... 384
- Parameter Symbology ... 383
- Temperature and Voltage Specifications ... 384
- Timing Conditions ... 384

AC Characteristics
- Internal RC Accuracy ... 386

Access Bank
- Mapping with Indexed Literal Offset Mode ... 87

ACKSTAT ... 225
ACKSTAT Status Flag ... 225
ADC ... 265
- Acquisition Requirements ... 275
- Block Diagram ... 265
- Calculating Acquisition Time ... 275
- Channel Selection ... 266
- Configuration ... 266
- Conversion Clock ... 266
- Conversion Procedure ... 270
- Internal Sampling Switch (RSS) IMPEDANCE ... 275
- Interrupts ... 267
- Operation ... 268
- Operation During Sleep ... 269
- Port Configuration ... 266
- Power Management ... 269
- Reference Voltage (VREF) ... 266
- Result Formatting ... 267
- Source Impedance ... 275
- Special Event Trigger ... 269
- Starting an A/D Conversion ... 267

ADCON0 Register ... 271
ADCON1 Register ... 272
ADCON2 Register ... 273
ADDFSR ... 358
ADDLW ... 321
ADDULNK ... 358
ADDWF ... 321
ADDWFC ... 322
ADRESH Register (ADFM = 0) ... 274
ADRESH Register (ADFM = 1) ... 274
ADRESL Register (ADFM = 0) ... 274
ADRESL Register (ADFM = 1) ... 274
Analog Input Connection Considerations ... 286
Analog-to-Digital Converter. *See* ADC
ANDLW ... 322
ANDWF ... 323
ANSEL (PORT Analog Control) ... 136
ANSEL Register ... 136
ANSELH Register ... 137
Assembler
- MPASM Assembler ... 366

B

Bank Select Register (BSR) ... 71
Baud Rate Generator ... 221
BAUDCON Register ... 248
BC ... 323
BCF ... 324
BF ... 225
BF Status Flag ... 225
Block Diagrams
- ADC ... 265
- ADC Transfer Function ... 276
- Analog Input Model ... 276, 286
- Baud Rate Generator ... 221
- Capture Mode Operation ... 146
- CCP PWM ... 149
- Clock Source ... 27
- Comparator 1 ... 280
- Comparator 2 ... 280
- Comparator Voltage Reference ... 290
- Compare Mode Operation ... 147
- Crystal Operation ... 31
- EUSART Receive ... 238
- EUSART Transmit ... 237
- External POR Circuit (Slow VDD Power-up) ... 53
- External RC Mode ... 32
- Fail-Safe Clock Monitor (FSCM) ... 40
- Generic I/O Port ... 121
- High/Low-Voltage Detect with External Input ... 294
- Interrupt Logic ... 108
- MSSP (I^2C Master Mode) ... 219
- MSSP (I^2C Mode) ... 202
- MSSP (SPI Mode) ... 193
- On-Chip Reset Circuit ... 51
- PIC18F2XK20 ... 14
- PIC18F4XK20 ... 15
- PLL (HS Mode) ... 35
- PORTD and PORTE (Parallel Slave Port) ... 139
- PWM (Enhanced) ... 175
- Reads from Flash Program Memory ... 93
- Resonator Operation ... 31
- Table Read Operation ... 89
- Table Write Operation ... 90
- Table Writes to Flash Program Memory ... 95
- Timer0 in 16-Bit Mode ... 157
- Timer0 in 8-Bit Mode ... 156
- Timer1 ... 160
- Timer1 (16-Bit Read/Write Mode) ... 160
- Timer2 ... 168
- Timer3 ... 170
- Timer3 (16-Bit Read/Write Mode) ... 171
- Voltage Reference Output Buffer Example ... 291
- Watchdog Timer ... 308

BN ... 324
BNC ... 325
BNN ... 325
BNOV ... 326
BNZ ... 326
BOR. *See* Brown-out Reset.
BOV ... 329
BRA ... 327
Break Character (12-bit) Transmit and Receive ... 256
BRG. *See* Baud Rate Generator.
Brown-out Reset (BOR) ... 54

Detecting 54
Disabling in Sleep Mode 54
Minimun Enable Time 54
Software Enabled 54
BSF 327
BTFSC 328
BTFSS 328
BTG 329
BZ 330

C

C Compilers
MPLAB C18 366
CALL 330
CALLW 359
Capture (CCP Module) 145
Associated Registers 148
CCP Pin Configuration 145
CCPRxH:CCPRxL Registers 145
Prescaler 145
Software Interrupt 145
Timer1/Timer3 Mode Selection 145
Capture (ECCP Module) 174
Capture/Compare/PWM (CCP) 143
Capture Mode. *See* Capture.
CCP Mode and Timer Resources 144
CCPRxH Register 144
CCPRxL Register 144
Compare Mode. *See* Compare.
Interaction of Two CCP Modules 144
Module Configuration 144
PWM Mode 149
Duty Cycle 150
Effects of Reset 152
Example PWM Frequencies & Resolutions
Fosc=20 MHZ 151
Fosc=40 MHZ 151
Fosc=8 MHZ 151
Operation in Sleep Mode 152
Setup for Operation 152
System Clock Frequency Changes 152
PWM Period 150
Setup for PWM Operation 152
CCP1CON Register 173
CCP2CON Register 143
Clock Accuracy with Asynchronous Operation 246
Clock Sources
Associated registers 41
External Modes 30
EC 30
HS 31
LP 31
OST 30
RC 32
XT 31
Internal Modes 32
Frequency Selection 34
HFINTOSC 32
INTOSC 32
INTOSCIO 32
LFINTOSC 34
Selecting the 31 kHz Source 28
Selection Using OSCCON Register 28
Clock Switching 37
CLRF 331
CLRWDT 331
CM1CON0 Register 284
CM2CON0 Register 285
CM2CON1 Register 287
Code Examples
16 x 16 Signed Multiply Routine 106
16 x 16 Unsigned Multiply Routine 106
8 x 8 Signed Multiply Routine 105
8 x 8 Unsigned Multiply Routine 105
A/D Conversion 270
Changing Between Capture Prescalers 145
Clearing RAM Using Indirect Addressing 83
Computed GOTO Using an Offset Value 68
Data EEPROM Read 101
Data EEPROM Refresh Routine 102
Data EEPROM Write 101
Erasing a Flash Program Memory Row 94
Fast Register Stack 68
Implementing a Timer1 Real-Time Clock 164
Initializing PORTA 121
Initializing PORTB 124
Initializing PORTC 127
Initializing PORTD 130
Initializing PORTE 133
Loading the SSPBUF (SSPSR) Register 196
Reading a Flash Program Memory Word 93
Saving Status, WREG and BSR Registers in RAM 119
Writing to Flash Program Memory 96–97
Code Protection 299
COMF 332
Comparator
Associated Registers 288
Operation 279
Operation During Sleep 283
Response Time 281
Comparator Module 279
C1 Output State Versus Input Conditions 281
Comparator Specifications 381
Comparator Voltage Reference (CVREF)
Associated Registers 292
Effects of a Reset 283, 289
Operation During Sleep 289
Overview 289
Comparator Voltage Reference (CVREF)
Response Time 281
Comparators
Effects of a Reset 283
Compare (CCP Module) 147
Associated Registers 148
CCPRx Register 147
Pin Configuration 147
Software Interrupt 147
Special Event Trigger 147, 172
Timer1/Timer3 Mode Selection 147
Compare (ECCP Module) 174
Special Event Trigger 174
Computed GOTO 68
CONFIG1H Register 301
CONFIG2H Register 302
CONFIG2L Register 302
CONFIG3H Register 303
CONFIG4L Register 303
CONFIG5H Register 304
CONFIG5L Register 304
CONFIG6H Register 305

© 2010 Microchip Technology Inc.

CONFIG6L Register 305
CONFIG7H Register 306
CONFIG7L Register 306
Configuration Bits 300
Configuration Register Protection 313
Context Saving During Interrupts 119
CPFSEQ 332
CPFSGT 333
CPFSLT 333
Customer Change Notification Service 453
Customer Notification Service 453
Customer Support 453
CVREF Voltage Reference Specifications 381

D

Data Addressing Modes 83
    Comparing Addressing Modes with the Extended Instruction Set Enabled 86
    Direct 83
    Indexed Literal Offset 85
        Instructions Affected 85
    Indirect 83
    Inherent and Literal 83
Data EEPROM
    Code Protection 313
Data EEPROM Memory 99
    Associated Registers 103
    EEADR and EEADRH Registers 99
    EECON1 and EECON2 Registers 99
    Operation During Code-Protect 102
    Protection Against Spurious Write 102
    Reading 101
    Using 102
    Write Verify 101
    Writing 101
Data Memory 71
    Access Bank 77
    and the Extended Instruction Set 85
    Bank Select Register (BSR) 71
    General Purpose Registers 77
    Map for PIC18F23K20/43K20 72
    Map for PIC18F24K20/44K20 73
    Map for PIC18F25K20/45K20 ..... 74, 75
    Special Function Registers 77
DAW 334
DC and AC Characteristics
    Graphs and Tables 403
DC Characteristics
    Input/Output 377
    Peripheral Supply Current 376
    Power-Down Current 371
    Primary Idle Supply Current 374
    Primary Run Supply Current 374
    RC Idle Supply Current 373
    RC Run Supply Current 372
    Secondary Oscillator Supply Current 375
    Supply Voltage 371
DCFSNZ 335
DECF 334
DECFSZ 335
Development Support 365
Device Differences 442
Device Overview 11
    Details on Individual Family Members 12
    New Core Features 11
    Other Special Features 12
Device Reset Timers 55
    PLL Lock Time-out 55
    Power-up Timer (PWRT) 55
    Time-out Sequence 55
DEVID1 Register 307
DEVID2 Register 307
Direct Addressing 84

E

ECCPAS Register 183
EECON1 Register 91, 100
Effect on Standard PIC Instructions 362
Effects of Power Managed Modes on Various Clock Sources 36
Effects of Reset
    PWM mode 152
Electrical Characteristics 369
Enhanced Capture/Compare/PWM (ECCP) 173
    Associated Registers 191
    Capture and Compare Modes 174
    Capture Mode. *See* Capture (ECCP Module).
    Enhanced PWM Mode 175
        Auto-Restart 184
        Auto-shutdown 183
        Direction Change in Full-Bridge Output Mode 181
        Full-Bridge Application 179
        Full-Bridge Mode 179
        Half-Bridge Application 178
        Half-Bridge Application Examples 185
        Half-Bridge Mode 178
        Output Relationships (Active-High and Active-Low) 176
        Output Relationships Diagram 177
        Programmable Dead Band Delay 185
        Shoot-through Current 185
        Start-up Considerations 182
    Outputs and Configuration 174
    Standard PWM Mode 174
    Timer Resources 174
Enhanced Universal Synchronous Asynchronous Receiver Transmitter (EUSART) 237
Errata 10
EUSART 237
    Asynchronous Mode 239
        12-bit Break Transmit and Receive 256
        Associated Registers, Receive 245
        Associated Registers, Transmit 241
        Auto-Wake-up on Break 254
        Baud Rate Generator (BRG) 249
        Clock Accuracy 246
        Receiver 242
        Setting up 9-bit Mode with Address Detect 244
        Transmitter 239
    Baud Rate Generator (BRG)
        Associated Registers 249
        Auto Baud Rate Detect 253
        Baud Rate Error, Calculating 249
        Baud Rates, Asynchronous Modes 250
        Formulas 249
        High Baud Rate Select (BRGH Bit) 249
    Clock polarity
        Synchronous Mode 257
    Data polarity
        Asychronous Receive 242
        Asychronous Transmit 239

Synchronous Mode 257
Interrupts
Asychronous Receive 243
Asychronous Transmit 239
Synchronous Master Mode 257, 262
Associated Registers, Receive 261
Associated Registers, Transmit 259, 262
Reception 260
Transmission 257
Synchronous Slave Mode
Associated Registers, Receive 263
Reception 263
Transmission 262
Extended Instruction Set
ADDFSR 358
ADDULNK 358
and Using MPLAB Tools 364
CALLW 359
Considerations for Use 362
MOVSF 359
MOVSS 360
PUSHL 360
SUBFSR 361
SUBULNK 361
Syntax 357

F

Fail-Safe Clock Monitor 40, 299
Fail-Safe Condition Clearing 40
Fail-Safe Detection 40
Fail-Safe Operation 40
Reset or Wake-up from Sleep 40
Fast Register Stack 68
Firmware Instructions 315
Flash Program Memory 89
Associated Registers 97
Control Registers 90
EECON1 and EECON2 90
TABLAT (Table Latch) Register 92
TBLPTR (Table Pointer) Register 92
Erase Sequence 94
Erasing 94
Operation During Code-Protect 97
Reading 93
Table Pointer
Boundaries Based on Operation 92
Table Pointer Boundaries 92
Table Reads and Table Writes 89
Write Sequence 95
Writing To 95
Protection Against Spurious Writes 97
Unexpected Termination 97
Write Verify 97

G

General Call Address Support 218
GOTO 336

H

Hardware Multiplier 105
Introduction 105
Operation 105
Performance Comparison 105
High/Low-Voltage Detect 293
Applications 297
Associated Registers 297
Characteristics 382
Current Consumption 295
Effects of a Reset 297
Operation 294
During Sleep 297
Setup 295
Start-up Time 295
Typical Application 297
HLVD. *See* High/Low-Voltage Detect. 293
HLVDCON Register 293

I

I/O Ports 121
I^2C
Associated Registers 235
I^2C Mode (MSSP)
Acknowledge Sequence Timing 228
Baud Rate Generator 221
Bus Collision
During a Repeated Start Condition 232
During a Stop Condition 234
Clock Arbitration 222
Clock Stretching 214
10-Bit Slave Receive Mode (SEN = 1) 214
10-Bit Slave Transmit Mode 214
7-Bit Slave Receive Mode (SEN = 1) 214
7-Bit Slave Transmit Mode 214
Clock Synchronization and the CKP bit (SEN = 1) 215
Effects of a Reset 229
General Call Address Support 218
I^2C Clock Rate w/BRG 221
Master Mode 219
Operation 220
Reception 225
Repeated Start Condition Timing 224
Start Condition Timing 223
Transmission 225
Multi-Master Communication, Bus Collision
and Arbitration 229
Multi-Master Mode 229
Operation 207
Read/Write Bit Information (R/$\overline{W}$ Bit) 207, 208
Registers 202
Serial Clock (RC3/SCK/SCL) 208
Slave Mode 207
Addressing 207
Reception 208
Transmission 208
Sleep Operation 229
Stop Condition Timing 228
ID Locations 299, 313
INCF 336
INCFSZ 337
In-Circuit Debugger 313
In-Circuit Serial Programming (ICSP) 299, 313
Indexed Literal Offset Addressing
and Standard PIC18 Instructions 362
Indexed Literal Offset Mode 362
Indirect Addressing 84
INFSNZ 337
Initialization Conditions for all Registers 59–62
Instruction Cycle 69
Clocking Scheme 69
Instruction Flow/Pipelining 69
Instruction Set 315
ADDLW 321

© 2010 Microchip Technology Inc.

ADDWF 321
ADDWF (Indexed Literal Offset Mode) 363
ADDWFC 322
ANDLW 322
ANDWF 323
BC 323
BCF 324
BN 324
BNC 325
BNN 325
BNOV 326
BNZ 326
BOV 329
BRA 327
BSF 327
BSF (Indexed Literal Offset Mode) 363
BTFSC 328
BTFSS 328
BTG 329
BZ 330
CALL 330
CLRF 331
CLRWDT 331
COMF 332
CPFSEQ 332
CPFSGT 333
CPFSLT 333
DAW 334
DCFSNZ 335
DECF 334
DECFSZ 335
Extended Instruction Set 357
General Format 317
GOTO 336
INCF 336
INCFSZ 337
INFSNZ 337
IORLW 338
IORWF 338
LFSR 339
MOVF 339
MOVFF 340
MOVLB 340
MOVLW 341
MOVWF 341
MULLW 342
MULWF 342
NEGF 343
NOP 343
Opcode Field Descriptions 316
POP 344
PUSH 344
RCALL 345
RESET 345
RETFIE 346
RETLW 346
RETURN 347
RLCF 347
RLNCF 348
RRCF 348
RRNCF 349
SETF 349
SETF (Indexed Literal Offset Mode) 363
SLEEP 350
SUBFWB 350
SUBLW 351
SUBWF 351
SUBWFB 352
SWAPF 352
TBLRD 353
TBLWT 354
TSTFSZ 355
XORLW 355
XORWF 356
INTCON Register 109
INTCON Registers 109–111
INTCON2 Register 110
INTCON3 Register 111
Inter-Integrated Circuit. *See* I^2C.
Internal Oscillator Block
HFINTOSC Frequency Drift 34
PLL in HFINTOSC Modes 35
Internal RC Oscillator
Use with WDT 308
Internal Sampling Switch (RSS) IMPEDANCE 275
Internet Address 453
Interrupt Sources 299
ADC 267
Capture Complete (CCP) 145
Compare Complete (CCP) 147
Interrupt-on-Change (RB7:RB4) 124
INTn Pin 119
PORTB, Interrupt-on-Change 119
TMR0 119
TMR0 Overflow 157
TMR1 Overflow 159
TMR3 Overflow 169, 171
Interrupts 107
IORLW 338
IORWF 338
IPR Registers 116
IPR1 Register 116
IPR2 Register 117

L

LFSR 339
Low-Voltage ICSP Programming. *See* Single-Supply ICSP Programming

M

Master Clear ($\overline{MCLR}$) 53
Master Synchronous Serial Port (MSSP). *See* MSSP.
Memory Organization 65
Data Memory 71
Program Memory 65
Microchip Internet Web Site 453
MOVF 339
MOVFF 340
MOVLB 340
MOVLW 341
MOVSF 359
MOVSS 360
MOVWF 341
MPLAB ASM30 Assembler, Linker, Librarian 366
MPLAB Integrated Development Environment Software 365
MPLAB PM3 Device Programmer 368
MPLAB REAL ICE In-Circuit Emulator System 367
MPLINK Object Linker/MPLIB Object Librarian 366
MSSP
$\overline{ACK}$ Pulse 207, 208

Control Registers (general) 193
I²C Mode. *See* I²C Mode.
Module Overview 193
SPI Master/Slave Connection 197
SPI Mode. *See* SPI Mode.
SSPBUF Register 198
SSPSR Register 198
MULLW 342
MULWF 342

N

NEGF 343
NOP 343

O

OSCCON Register 29
Oscillator Configuration
EC 27
ECIO 27
HS 27
HSPLL 27
INTOSC 27
INTOSCIO 27
LP 27
RC 27
RCIO 27
XT 27
Oscillator Module 27
HFINTOSC 27
LFINTOSC 27
Oscillator Selection 299
Oscillator Start-up Timer (OST) 36, 55
Oscillator Switching
Fail-Safe Clock Monitor 40
Two-Speed Clock Start-up 38
Oscillator, Timer1 ..... 159, 171
Oscillator, Timer3 169
OSCTUNE Register 33

P

P1A/P1B/P1C/P1D.*See* Enhanced Capture/
Compare/PWM (ECCP) 175
Packaging Information 427
Marking 427
Parallel Slave Port (PSP) 130, 139
Associated Registers 141
$\overline{CS}$ (Chip Select) 139
PORTD 139
$\overline{RD}$ (Read Input) 139
Select (PSPMODE Bit) 130, 139
$\overline{WR}$ (Write Input) 139
PIE Registers 114
PIE1 Register 114
PIE2 Register 115
Pin Functions
$\overline{MCLR}$/VPP/RE3 ..... 16, 20
OSC1/CLKI/RA7 ..... 16, 20
OSC2/CLKO/RA6 ..... 16, 20
RA0/AN0/C12IN0- 17, 21
RA1/AN1/C12IN0- 21
RA1/AN1/C12IN1- 17
RA2/AN2/VREF-/CVREF/C2IN+ 17, 21
RA3/AN3/VREF+/C1IN+ 17, 21
RA4/T0CKI/C1OUT 17, 21
RA5/AN4/$\overline{SS}$/HLVDIN/C2OUT 17, 21
RB0/INT0/FLT0/AN12 ..... 18, 22
RB1/INT1/AN10/C12IN3- 22
RB1/INT1/AN10/P1C/C12IN3- 18
RB2/INT2/AN8 22
RB2/INT2/AN8/P1B 18
RB3/AN9/CCP2/C12IN2- 18, 22
RB4/KBI0/AN11 22
RB4/KBI0/AN11/P1D 18
RB5/KBI1/PGM 18, 22
RB6/KBI2/PGC 18, 22
RB7/KBI3/PGD 18, 22
RC0/T1OSO/T13CKI 19, 23
RC1/T1OSI/CCP2 ..... 19, 23
RC2/CCP1/P1A 19, 23
RC3/SCK/SCL 19, 23
RC4/SDI/SDA 19, 23
RC5/SDO 19, 23
RC6/TX/CK 19, 23
RC7/RX/DT 19, 23
RD0/PSP0 24
RD1/PSP1 24
RD2/PSP2 24
RD3/PSP3 24
RD4/PSP4 24
RD5/PSP5/P1B 24
RD6/PSP6/P1C 24
RD7/PSP7/P1D 24
RE0/$\overline{RD}$/AN5 25
RE1/$\overline{WR}$/AN6 25
RE2/$\overline{CS}$/AN7 25
VDD 19, 25
VSS 19, 25
Pinout I/O Descriptions
PIC18F2XK20 16
PIC18F4XK20 20
PIR Registers 112
PIR1 Register 112
PIR2 Register 113
PLL Frequency Multiplier 35
HSPLL Oscillator Mode 35
POP 344
POR. *See* Power-on Reset.
PORTA
Associated Registers 123
LATA Register 121
PORTA Register 121
TRISA Register 121
PORTB
Associated Registers 126
LATB Register 124
PORTB Register 124
TRISB Register 124
PORTC
Associated Registers 129
LATC Register 127
PORTC Register 127
RC3/SCK/SCL Pin 208
TRISC Register 127
PORTD
Associated Registers 132
LATD Register 130
Parallel Slave Port (PSP) Function 130
PORTD Register 130
TRISD Register 130
PORTE
Associated Registers 135

© 2010 Microchip Technology Inc.

LATE Register 133
PORTE Register 133
PSP Mode Select (PSPMODE Bit) 130
TRISE Register 133
Power Managed Modes 43
and A/D Operation 269
and PWM Operation 190
and SPI Operation 201
Clock Transitions and Status Indicators 44
Effects on Clock Sources 36
Entering 43
Exiting Idle and Sleep Modes 48
by Interrupt 48
by Reset 48
by WDT Time-out 48
Without a Start-up Delay 49
Idle Modes 45
PRI_IDLE 47
RC_IDLE 48
SEC_IDLE 47
Multiple Sleep Functions 44
Run Modes 44
PRI_RUN 44
SEC_RUN 44
Selecting 43
Sleep Mode 45
Summary (table) 43
Power-on Reset (POR) 53
Power-up Timer (PWRT) 55
Time-out Sequence 55
Power-up Delays 36
Power-up Timer (PWRT) 36
Prescaler, Timer0 157
PRI_IDLE Mode 47
PRI_RUN Mode 44
Program Counter 66
PCL, PCH and PCU Registers 66
PCLATH and PCLATU Registers 66
Program Memory
and Extended Instruction Set 87
Code Protection 311
Instructions 70
Two-Word 70
Interrupt Vector 65
Look-up Tables 68
Map and Stack (diagram) 65
Reset Vector 65
Program Verification and Code Protection 310
Associated Registers 310
Programming, Device Instructions 315
PSP. *See* Parallel Slave Port.
PSTRCON Register 187
Pulse Steering 187
PUSH 344
PUSH and POP Instructions 67
PUSHL 360
PWM (CCP Module)
Associated Registers 153
PWM (ECCP Module)
Effects of a Reset 190
Operation in Power Managed Modes 190
Operation with Fail-Safe Clock Monitor 190
Pulse Steering 187
Steering Synchronization 189
PWM Mode. *See* Enhanced Capture/Compare/PWM 175
PWM1CON Register 186

R

RAM. *See* Data Memory.
RC_IDLE Mode 48
RCALL 345
RCON Register 52, 118
Bit Status During Initialization 58
RCREG 244
RCSTA Register 247
Reader Response 454
Register
RCREG Register 253
Register File 77
Register File Summary 79–81
Registers
ADCON0 (ADC Control 0) 271
ADCON1 (ADC Control 1) 272
ADCON2 (ADC Control 2) 273
ADRESH (ADC Result High) with ADFM = 0) 274
ADRESH (ADC Result High) with ADFM = 1) 274
ADRESL (ADC Result Low) with ADFM = 0) 274
ADRESL (ADC Result Low) with ADFM = 1) 274
ANSEL (Analog Select 1) 136
ANSEL (PORT Analog Control) 136
ANSELH (Analog Select 2) 137
ANSELH (PORT Analog Control) 137
BAUDCON (Baud Rate Control) 248
BAUDCON (EUSART Baud Rate Control) 248
CCP1CON (Enhanced Capture/Compare/PWM Control) 173
CCP2CON (Standard Capture/Compare/PWM Control) 143
CM1CON0 (C1 Control) 284
CM2CON0 (C2 Control) 285
CM2CON1 (C2 Control) 287
CONFIG1H (Configuration 1 High) 301
CONFIG2H (Configuration 2 High) 302
CONFIG2L (Configuration 2 Low) 302
CONFIG3H (Configuration 3 High) 303
CONFIG4L (Configuration 4 Low) 303
CONFIG5H (Configuration 5 High) 304
CONFIG5L (Configuration 5 Low) 304
CONFIG6H (Configuration 6 High) 305
CONFIG6L (Configuration 6 Low) 305
CONFIG7H (Configuration 7 High) 306
CONFIG7L (Configuration 7 Low) 306
CVRCON (Comparator Voltage Reference Control CVRCON Register 291
CVRCON2 (Comparator Voltage Reference Control 2) CVRCON2 Register 292
DEVID1 (Device ID 1) 307
DEVID2 (Device ID 2) 307
ECCPAS (Enhanced CCP Auto-shutdown Control) 183
EECON1 (Data EEPROM Control 1) 91, 100
HLVDCON (High/Low-Voltage Detect Control) 293
INTCON (Interrupt Control) 109
INTCON2 (Interrupt Control 2) 110
INTCON3 (Interrupt Control 3) 111
IPR1 (Peripheral Interrupt Priority 1) 116
IPR2 (Peripheral Interrupt Priority 2) 117
OSCCON (Oscillator Control) 29
OSCTUNE (Oscillator Tuning) 33
PIE1 (Peripheral Interrupt Enable 1) 114
PIE2 (Peripheral Interrupt Enable 2) 115

PIR1 (Peripheral Interrupt Request 1) 112
PIR2 (Peripheral Interrupt Request 2) 113
PSTRCON (Pulse Steering Control) 187
PWM1CON (Enhanced PWM Control) 186
RCON (Reset Control) 52, 118
RCON (Reset control) 118
RCSTA (Receive Status and Control) 247
SLRCON (PORT Slew Rate Control) 138
SSPADD (MSSP Address and Baud Rate, SPI Mode) 203
SSPCON1 (MSSP Control 1, I2C Mode) 205
SSPCON1 (MSSP Control 1, SPI Mode) 195
SSPCON2 (MSSP Control 2, I2C Mode) 206
SSPMSK (SSP Mask) 213
SSPSTAT (MSSP Status, SPI Mode) 194, 204
STATUS 82
STKPTR (Stack Pointer) 67
T0CON (Timer0 Control) 155
T1CON (Timer1 Control) 159
T2CON (Timer2 Control) 167
T3CON (Timer3 Control) 169
TRISE (PORTE/PSP Control) 134
TXSTA (Transmit Status and Control) 246
WDTCON (Watchdog Timer Control) 309
RESET 345
Reset State of Registers 58
Resets 51, 299
Brown-out Reset (BOR) 299
Oscillator Start-up Timer (OST) 299
Power-on Reset (POR) 299
Power-up Timer (PWRT) 299
RETFIE 346
RETLW 346
RETURN 347
Return Address Stack 66
Return Stack Pointer (STKPTR) 67
Revision History 441
RLCF 347
RLNCF 348
RRCF 348
RRNCF 349

S

SCK 193
SDI 193
SDO 193
SEC_IDLE Mode 47
SEC_RUN Mode 44
Serial Clock, SCK 193
Serial Data In (SDI) 193
Serial Data Out (SDO) 193
Serial Peripheral Interface. *See* SPI Mode.
SETF 349
Shoot-through Current 185
Single-Supply ICSP Programming.
Slave Select (SS) 193
Slave Select Synchronization 199
SLEEP 350
Sleep
OSC1 and OSC2 Pin States 36
Sleep Mode 45
Slew Rate 138
SLRCON Register 138
Software Simulator (MPLAB SIM) 367
SPBRG 249
SPBRGH 249
Special Event Trigger 269
Special Event Trigger. *See* Compare (ECCP Mode).
Special Event Trigger. *See* Compare (ECCP Module).
Special Features of the CPU 299
Special Function Registers 77
Map 78
SPI Mode (MSSP)
Associated Registers 201
Bus Mode Compatibility 201
Effects of a Reset 201
Enabling SPI I/O 197
Master Mode 198
Master/Slave Connection 197
Operation 196
Operation in Power Managed Modes 201
Serial Clock 193
Serial Data In 193
Serial Data Out 193
Slave Mode 199
Slave Select 193
Slave Select Synchronization 199
SPI Clock 198
Typical Connection 197
SS 193
SSPADD Register 203
SSPCON1 Register 195, 205
SSPCON2 Register 206
SSPMSK Register 213
SSPOV 225
SSPOV Status Flag 225
SSPSTAT Register 194, 204
R/W Bit 207, 208
Stack Full/Underflow Resets 68
Standard Instructions 315
STATUS Register 82
STKPTR Register 67
SUBFSR 361
SUBFWB 350
SUBLW 351
SUBULNK 361
SUBWF 351
SUBWFB 352
SWAPF 352

T

T0CON Register 155
T1CON Register 159
T2CON Register 167
T3CON Register 169
Table Pointer Operations (table) 92
Table Reads/Table Writes 68
TBLRD 353
TBLWT 354
Time-out in Various Situations (table) 55
Timer0 155
Associated Registers 157
Operation 156
Overflow Interrupt 157
Prescaler 157
Prescaler Assignment (PSA Bit) 157
Prescaler Select (T0PS2:T0PS0 Bits) 157
Prescaler. *See* Prescaler, Timer0.
Reads and Writes in 16-Bit Mode 156
Source Edge Select (T0SE Bit) 156
Source Select (T0CS Bit) 156
Switching Prescaler Assignment 157

© 2010 Microchip Technology Inc.

Timer1 159
16-Bit Read/Write Mode 162
Associated Registers 165
Asynchronous Counter Mode 161
Reading and Writing 161
Interrupt 163
Operation 160
Oscillator 159, 162
Oscillator Layout Considerations 163
Overflow Interrupt 159
Prescaler 161
Resetting, Using the CCP Special Event Trigger 163
Special Event Trigger (ECCP) 174
TMR1H Register 159
TMR1L Register 159
Use as a Real-Time Clock 164
Timer2 167
Associated Registers 168
Interrupt 168
Operation 167
Output 168
Timer3 169
16-Bit Read/Write Mode 171
Associated Registers 172
Operation 170
Oscillator 169, 171
Overflow Interrupt 169, 171
Special Event Trigger (CCP) 172
TMR3H Register 169
TMR3L Register 169
Timing Diagrams
A/D Conversion 402
Acknowledge Sequence 228
Asynchronous Reception 245
Asynchronous Transmission 240
Asynchronous Transmission (Back to Back) 241
Auto Wake-up Bit (WUE) During Normal Operation 255
Auto Wake-up Bit (WUE) During Sleep 255
Automatic Baud Rate Calculator 254
Baud Rate Generator with Clock Arbitration 222
BRG Reset Due to SDA Arbitration During Start Condition 231
Brown-out Reset (BOR) 388
Bus Collision During a Repeated Start Condition (Case 1) 232
Bus Collision During a Repeated Start Condition (Case 2) 233
Bus Collision During a Start Condition (SCL = 0) 231
Bus Collision During a Stop Condition (Case 1) 234
Bus Collision During a Stop Condition (Case 2) 234
Bus Collision During Start Condition (SDA only) 230
Bus Collision for Transmit and Acknowledge 229
Capture/Compare/PWM (CCP) 390
CLKO and I/O 387
Clock Synchronization 215
Clock/Instruction Cycle 69
Comparator Output 279
Example SPI Master Mode (CKE = 0) 392
Example SPI Master Mode (CKE = 1) 393
Example SPI Slave Mode (CKE = 0) 394
Example SPI Slave Mode (CKE = 1) 395
External Clock (All Modes except PLL) 384
Fail-Safe Clock Monitor (FSCM) 41
First Start Bit Timing 223
Full-Bridge PWM Output 180
Half-Bridge PWM Output 178, 185
High/Low-Voltage Detect Characteristics 382
High/Low-Voltage Detect Operation (VDIRMAG = 0) 295
High/Low-Voltage Detect Operation (VDIRMAG = 1) 296
I2C Bus Data 396
I2C Bus Start/Stop Bits 396
I2C Master Mode (7 or 10-Bit Transmission) 226
I2C Master Mode (7-Bit Reception) 227
I2C Slave Mode (10-Bit Reception, SEN = 0) 211
I2C Slave Mode (10-Bit Reception, SEN = 1) 217
I2C Slave Mode (10-Bit Transmission) 212
I2C Slave Mode (7-bit Reception, SEN = 0) 209
I2C Slave Mode (7-Bit Reception, SEN = 1) 216
I2C Slave Mode (7-Bit Transmission) 210
I2C Slave Mode General Call Address Sequence (7 or 10-Bit Address Mode) 218
I2C Stop Condition Receive or Transmit Mode 228
Internal Oscillator Switch Timing 39
Master SSP I2C Bus Data 398
Master SSP I2C Bus Start/Stop Bits 398
Parallel Slave Port (PIC18F4XK20) 391
Parallel Slave Port (PSP) Read 140
Parallel Slave Port (PSP) Write 140
PWM Auto-shutdown
Auto-restart Enabled 184
Firmware Restart 184
PWM Direction Change 181
PWM Direction Change at Near 100% Duty Cycle 182
PWM Output (Active-High) 176
PWM Output (Active-Low) 177
Repeat Start Condition 224
Reset, Watchdog Timer (WDT), Oscillator Start-up Timer (OST), Power-up Timer (PWRT) 388
Send Break Character Sequence 256
Slave Synchronization 199
Slow Rise Time (MCLR Tied to VDD, VDD Rise > TPWRT) 57
SPI Mode (Master Mode) 198
SPI Mode (Slave Mode, CKE = 0) 200
SPI Mode (Slave Mode, CKE = 1) 200
Synchronous Reception (Master Mode, SREN) 261
Synchronous Transmission 258
Synchronous Transmission (Through TXEN) 258
Time-out Sequence on POR w/PLL Enabled (MCLR Tied to VDD) 57
Time-out Sequence on Power-up (MCLR Not Tied to VDD, Case 1) 56
Time-out Sequence on Power-up (MCLR Not Tied to VDD, Case 2) 56
Time-out Sequence on Power-up (MCLR Tied to VDD, VDD Rise < TPWRT) 56
Timer0 and Timer1 External Clock 389
Timer1 Incrementing Edge 161
Transition for Entry to Sleep Mode 46
Transition for Wake from Sleep (HSPLL) 46
Transition Timing for Entry to Idle Mode 47
Transition Timing for Wake from Idle to Run Mode 47
USART Synchronous Receive (Master/Slave) 400
USART Synchronous Transmission (Master/Slave) 400
Timing Diagrams and Specifications 384

A/D Conversion Requirements 402
Capture/Compare/PWM Requirements 390
CLKO and I/O Requirements 387
Example SPI Mode Requirements
(Master Mode, CKE = 0) 392
(Master Mode, CKE = 1) 393
(Slave Mode, CKE = 0) 394
(Slave Mode, CKE = 1) 395
External Clock Requirements 385
I^2C Bus Data Requirements (Slave Mode) 397
I^2C Bus Start/Stop Bits Requirements
(Slave Mode) 396
Master SSP I^2C Bus Data Requirements 399
Master SSP I^2C Bus Start/Stop Bits
Requirements 398
Parallel Slave Port Requirements (PIC18F4X20) 391
PLL Clock 386
Reset, Watchdog Timer, Oscillator Start-up Timer,
Power-up Timer and Brown-out Reset
Requirements 388
Timer0 and Timer1 External Clock Requirements ... 389
USART Synchronous Receive Requirements 400
USART Synchronous Transmission
Requirements 400
Top-of-Stack Access 66
TRISE Register 134
PSPMODE Bit 130
TSTFSZ 355
Two-Speed Clock Start-up Mode 38
Two-Speed Start-up 299
Two-Word Instructions
Example Cases 70
TXREG 239
TXSTA Register 246
BRGH Bit 249

V

Voltage Reference (VR)
Specifications 381
Voltage Reference. *See* Comparator Voltage
Reference (CVREF)
Voltage References
Fixed Voltage Reference (FVR) 290
VR Stabilization 290
VREF. *SEE* ADC Reference Voltage

W

Wake-up on Break 254
Watchdog Timer (WDT) 299, 308
Associated Registers 309
Control Register 309
Programming Considerations 308
WCOL 223, 224, 225, 228
WCOL Status Flag 223, 224, 225, 228
WDTCON Register 309
WWW Address 453
WWW, On-Line Support 10

X

XORLW 355
XORWF 356

© 2010 Microchip Technology Inc.

THE MICROCHIP WEB SITE

Microchip provides online support via our WWW site at www.microchip.com. This web site is used as a means to make files and information easily available to customers. Accessible by using your favorite Internet browser, the web site contains the following information:

- **Product Support** – Data sheets and errata, application notes and sample programs, design resources, user's guides and hardware support documents, latest software releases and archived software
- **General Technical Support** – Frequently Asked Questions (FAQ), technical support requests, online discussion groups, Microchip consultant program member listing
- **Business of Microchip** – Product selector and ordering guides, latest Microchip press releases, listing of seminars and events, listings of Microchip sales offices, distributors and factory representatives

CUSTOMER CHANGE NOTIFICATION SERVICE

Microchip's customer notification service helps keep customers current on Microchip products. Subscribers will receive e-mail notification whenever there are changes, updates, revisions or errata related to a specified product family or development tool of interest.

To register, access the Microchip web site at www.microchip.com, click on Customer Change Notification and follow the registration instructions.

CUSTOMER SUPPORT

Users of Microchip products can receive assistance through several channels:

- Distributor or Representative
- Local Sales Office
- Field Application Engineer (FAE)
- Technical Support
- Development Systems Information Line

Customers should contact their distributor, representative or field application engineer (FAE) for support. Local sales offices are also available to help customers. A listing of sales offices and locations is included in the back of this document.

Technical support is available through the web site at: http://support.microchip.com

READER RESPONSE

It is our intention to provide you with the best documentation possible to ensure successful use of your Microchip product. If you wish to provide your comments on organization, clarity, subject matter, and ways in which our documentation can better serve you, please FAX your comments to the Technical Publications Manager at (480) 792-4150.

Please list the following information, and use this outline to provide us with your comments about this document.

To: Technical Publications Manager Total Pages Sent _____

RE: Reader Response

From: Name _____

Company _____

Address _____

City / State / ZIP / Country _____

Telephone: (_____) _____ - _____ FAX: (_____) _____ - _____

Application (optional):

Would you like a reply? ___Y ___N

Device: PIC18F2XK20/4XK20 Literature Number: DS41303G

Questions:

1. What are the best features of this document?

2. How does this document meet your hardware and software development needs?

3. Do you find the organization of this document easy to follow? If not, why?

4. What additions to the document do you think would enhance the structure and subject?

5. What deletions from the document could be made without affecting the overall usefulness?

6. Is there any incorrect or misleading information (what and where)?

7. How would you improve this document?

© 2010 Microchip Technology Inc.

PRODUCT IDENTIFICATION SYSTEM

To order or obtain information, e.g., on pricing or delivery, refer to the factory or the listed sales office.

PART NO.	X	/XX	XXX
Device	Temperature Range	Package	Pattern

Device:	PIC18F23K20[(1)], PIC18F24K20[(1)], PIC18F25K20[(1)], PIC18F26K20[(1)], PIC18F43K20[(1)], PIC18F44K20[(1)], PIC18F45K20[(1)], PIC18F46K20[(1)]
Temperature Range:	E = -40°C to +125°C (Extended) I = -40°C to +85°C (Industrial)
Package:	ML = QFN MV = UQFN P = PDIP PT = TQFP (Thin Quad Flatpack) SO = SOIC SP = Skinny Plastic DIP SS = SSOP
Pattern:	QTP, SQTP, Code or Special Requirements (blank otherwise)

Examples:

a) PIC18F45K20-E/P 301 = Extended temp., PDIP package, QTP pattern #301.

b) PIC18F23K20-I/SO = Industrial temp., SOIC package.

c) PIC18F44K20-E/P = Extended temp., PDIP package.

d) PIC18F46K20T-I/TP = Industrial temp., TQFP package, tape and reel.

Note 1: T = Part number appended with T indicates tape and reel. P and SP package options not available in tape and reel.

WORLDWIDE SALES AND SERVICE

AMERICAS

Corporate Office
2355 West Chandler Blvd.
Chandler, AZ 85224-6199
Tel: 480-792-7200
Fax: 480-792-7277
Technical Support:
http://support.microchip.com
Web Address:
www.microchip.com

Atlanta
Duluth, GA
Tel: 678-957-9614
Fax: 678-957-1455

Boston
Westborough, MA
Tel: 774-760-0087
Fax: 774-760-0088

Chicago
Itasca, IL
Tel: 630-285-0071
Fax: 630-285-0075

Cleveland
Independence, OH
Tel: 216-447-0464
Fax: 216-447-0643

Dallas
Addison, TX
Tel: 972-818-7423
Fax: 972-818-2924

Detroit
Farmington Hills, MI
Tel: 248-538-2250
Fax: 248-538-2260

Kokomo
Kokomo, IN
Tel: 765-864-8360
Fax: 765-864-8387

Los Angeles
Mission Viejo, CA
Tel: 949-462-9523
Fax: 949-462-9608

Santa Clara
Santa Clara, CA
Tel: 408-961-6444
Fax: 408-961-6445

Toronto
Mississauga, Ontario,
Canada
Tel: 905-673-0699
Fax: 905-673-6509

ASIA/PACIFIC

Asia Pacific Office
Suites 3707-14, 37th Floor
Tower 6, The Gateway
Harbour City, Kowloon
Hong Kong
Tel: 852-2401-1200
Fax: 852-2401-3431

Australia - Sydney
Tel: 61-2-9868-6733
Fax: 61-2-9868-6755

China - Beijing
Tel: 86-10-8528-2100
Fax: 86-10-8528-2104

China - Chengdu
Tel: 86-28-8665-5511
Fax: 86-28-8665-7889

China - Chongqing
Tel: 86-23-8980-9588
Fax: 86-23-8980-9500

China - Hong Kong SAR
Tel: 852-2401-1200
Fax: 852-2401-3431

China - Nanjing
Tel: 86-25-8473-2460
Fax: 86-25-8473-2470

China - Qingdao
Tel: 86-532-8502-7355
Fax: 86-532-8502-7205

China - Shanghai
Tel: 86-21-5407-5533
Fax: 86-21-5407-5066

China - Shenyang
Tel: 86-24-2334-2829
Fax: 86-24-2334-2393

China - Shenzhen
Tel: 86-755-8203-2660
Fax: 86-755-8203-1760

China - Wuhan
Tel: 86-27-5980-5300
Fax: 86-27-5980-5118

China - Xian
Tel: 86-29-8833-7252
Fax: 86-29-8833-7256

China - Xiamen
Tel: 86-592-2388138
Fax: 86-592-2388130

China - Zhuhai
Tel: 86-756-3210040
Fax: 86-756-3210049

ASIA/PACIFIC

India - Bangalore
Tel: 91-80-3090-4444
Fax: 91-80-3090-4123

India - New Delhi
Tel: 91-11-4160-8631
Fax: 91-11-4160-8632

India - Pune
Tel: 91-20-2566-1512
Fax: 91-20-2566-1513

Japan - Yokohama
Tel: 81-45-471- 6166
Fax: 81-45-471-6122

Korea - Daegu
Tel: 82-53-744-4301
Fax: 82-53-744-4302

Korea - Seoul
Tel: 82-2-554-7200
Fax: 82-2-558-5932 or
82-2-558-5934

Malaysia - Kuala Lumpur
Tel: 60-3-6201-9857
Fax: 60-3-6201-9859

Malaysia - Penang
Tel: 60-4-227-8870
Fax: 60-4-227-4068

Philippines - Manila
Tel: 63-2-634-9065
Fax: 63-2-634-9069

Singapore
Tel: 65-6334-8870
Fax: 65-6334-8850

Taiwan - Hsin Chu
Tel: 886-3-6578-300
Fax: 886-3-6578-370

Taiwan - Kaohsiung
Tel: 886-7-536-4818
Fax: 886-7-536-4803

Taiwan - Taipei
Tel: 886-2-2500-6610
Fax: 886-2-2508-0102

Thailand - Bangkok
Tel: 66-2-694-1351
Fax: 66-2-694-1350

EUROPE

Austria - Wels
Tel: 43-7242-2244-39
Fax: 43-7242-2244-393

Denmark - Copenhagen
Tel: 45-4450-2828
Fax: 45-4485-2829

France - Paris
Tel: 33-1-69-53-63-20
Fax: 33-1-69-30-90-79

Germany - Munich
Tel: 49-89-627-144-0
Fax: 49-89-627-144-44

Italy - Milan
Tel: 39-0331-742611
Fax: 39-0331-466781

Netherlands - Drunen
Tel: 31-416-690399
Fax: 31-416-690340

Spain - Madrid
Tel: 34-91-708-08-90
Fax: 34-91-708-08-91

UK - Wokingham
Tel: 44-118-921-5869
Fax: 44-118-921-5820

01/05/10

© 2010 Microchip Technology Inc.