Feed-through header - EMC 1,5/ 2-G-3,81 - 1897801

Please be informed that the data shown in this PDF Document is generated from our Online Catalog. Please find the complete data in the user's documentation. Our General Terms of Use for Downloads are valid (http://phoenixcontact.com/download)

PCB headers, nominal current: 8 A, rated voltage (III/2): 160 V, nominal cross section: 1.5 mm², number of positions: 2, pitch: 3.81 mm, color: green, contact surface: Tin, mounting: Press-in technology, pin layout: Linear pinning, solder pin [P]: 3.5 mm



The figure shows a 10-position version of the product

Your advantages

- Long-term stable press-in connection ensures high holding force without thermal load
- Maximum flexibility when it comes to device design – one header for connectors with different connection technologies

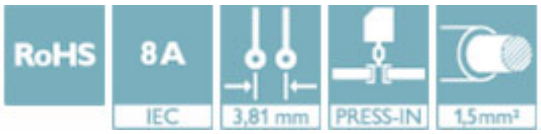

Key Commercial Data

Packing unit	50 pc
GTIN	4 017918 166380
GTIN	4017918166380

Technical data

Item properties

Brief article description	Feed-through header
Plug-in system	MINI COMBICON
Type of contact	Male connector
Range of articles	EMC 1,5/..-G
Pitch	3.81 mm
Number of positions	2
Mounting type	Press-in technology
Pin layout	Linear pinning
Locking	without
Number of levels	1
Number of connections	2
Number of potentials	2

Feed-through header - EMC 1,5/ 2-G-3,81 - 1897801

Technical data

Electrical parameters

Nominal current	8 A
Nom. voltage	160 V
Rated voltage	160 V
Rated voltage (III/2)	160 V
Rated voltage (II/2)	250 V
Rated surge voltage (III/3)	2.5 kV
Rated surge voltage (III/2)	2.5 kV
Rated surge voltage (II/2)	2.5 kV

Material data - contact

Note	WEEE/RoHS-compliant, free of whiskers according to IEC 60068-2-82/ JEDEC JESD 201
Contact material	Cu alloy
Metal surface contact area (top layer)	Tin (1 - 2 µm Sn)
Metal surface contact area (middle layer)	Nickel (2 - 3 µm Ni),
Metal surface soldering area (top layer)	Tin (1 - 2 µm Sn)
Metal surface soldering area (middle layer)	Nickel (2 - 3 µm Ni)

Material data - housing

Housing color	green (6021)
Insulating material	PBT
Insulating material group	IIIa
CTI according to IEC 60112	225
Flammability rating according to UL 94	V0

Dimensions for the product

Length [l]	10.7 mm
Width [w]	9.01 mm
Height [h]	10.5 mm
Pitch	3.81 mm
Height (without solder pin)	7 mm
Solder pin [P]	3.5 mm
Pin dimensions	0.8 x 0.8 mm
Dimension a	3.81 mm

Dimensions for PCB design

Hole diameter	1.45 mm

Packaging information

Type of packaging	packed in cardboard
Pieces per package	50
Denomination packing units	Pcs.

Standards and Regulations

Feed-through header - EMC 1,5/ 2-G-3,81 - 1897801

Technical data

Standards and Regulations

Connection in acc. with standard	EN-VDE
	CUL
Flammability rating according to UL 94	V0

Environmental Product Compliance

China RoHS	Environmentally friendly use period: unlimited = EFUP-e
	No hazardous substances above threshold values

Drawings

Drilling diagram

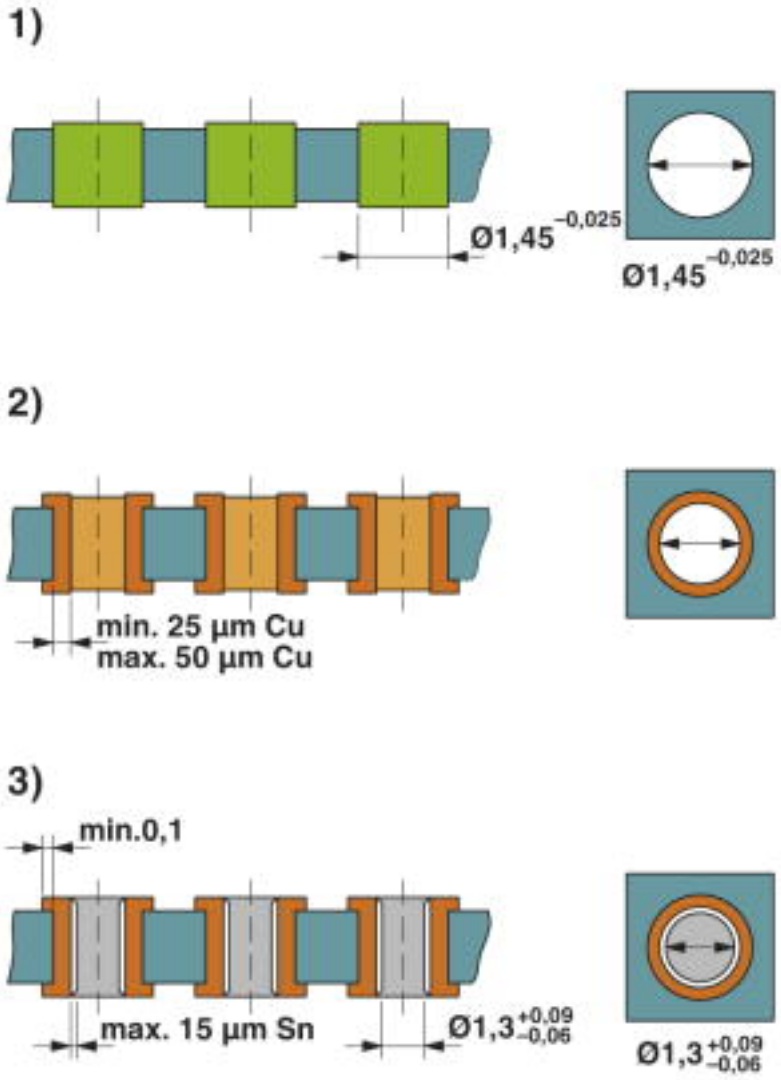

Drill hole layout in FR4 or EP-GC basic material

Feed-through header - EMC 1,5/ 2-G-3,81 - 1897801

Drilling diagram

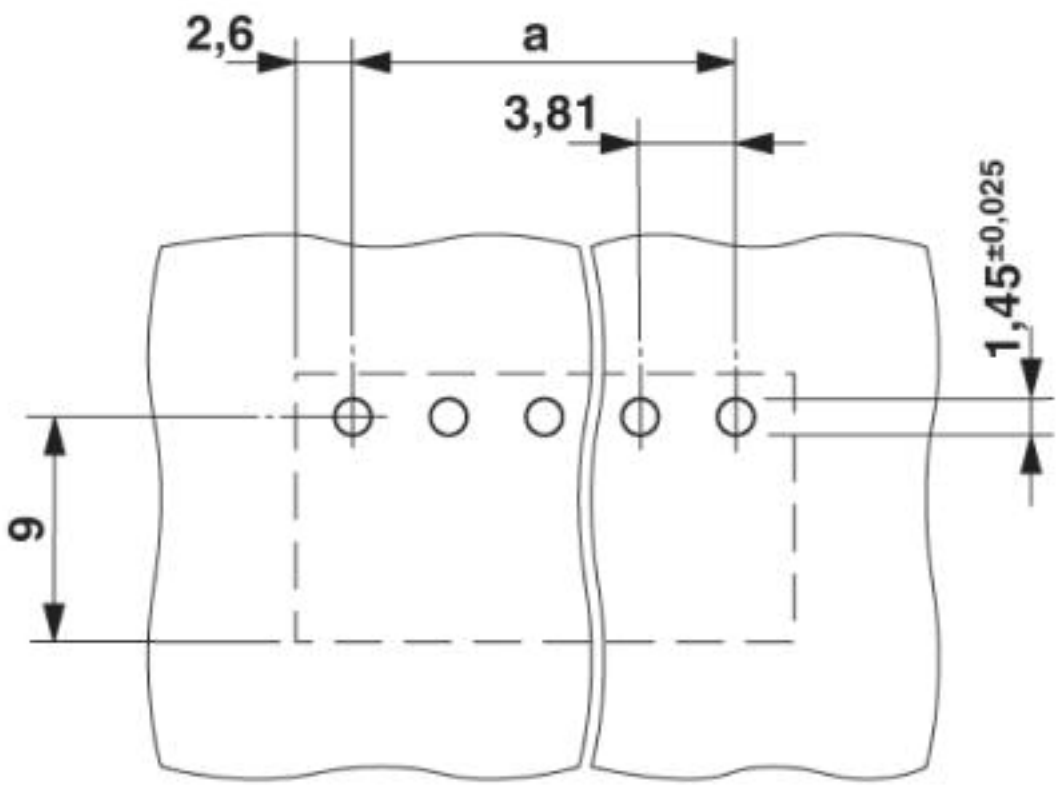

Dimensional drawing

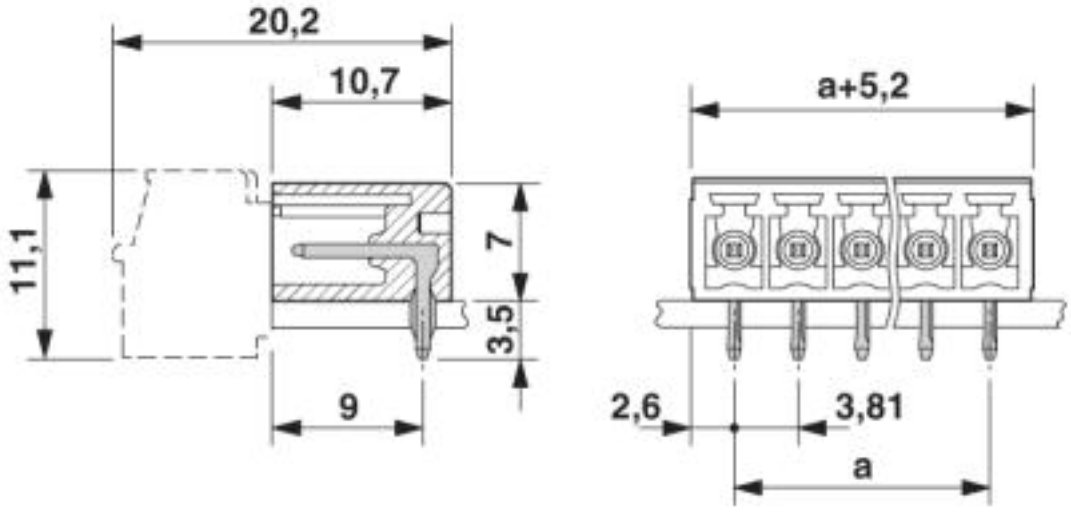

Classifications

eCl@ss

eCl@ss 4.0	27260700
eCl@ss 4.1	27260700

Feed-through header - EMC 1,5/ 2-G-3,81 - 1897801

Classifications

eCl@ss

eCl@ss 5.0	27260700
eCl@ss 5.1	27260700
eCl@ss 6.0	27260700
eCl@ss 7.0	27440402
eCl@ss 8.0	27440402
eCl@ss 9.0	27440402

ETIM

ETIM 3.0	EC001121
ETIM 4.0	EC002637
ETIM 5.0	EC002637
ETIM 6.0	EC002637
ETIM 7.0	EC002637

UNSPSC

UNSPSC 6.01	30211810
UNSPSC 7.0901	39121409
UNSPSC 11	39121409
UNSPSC 12.01	39121409
UNSPSC 13.2	39121409
UNSPSC 19.0	39121409

Approvals

Approvals

Approvals

EAC / cULus Recognized

Ex Approvals

Approval details

EAC	EAC	B.01742

Feed-through header - EMC 1,5/ 2-G-3,81 - 1897801

Approvals

cULus Recognized	c US	http://database.ul.com/cgi-bin/XYV/template/LISEXT/1FRAME/index.htm	E60425-20110128

	B	D
Nominal voltage UN	300 V	300 V
Nominal current IN	8 A	8 A

Accessories

Accessories

Coding element

Coding profile - CP-MSTB - 1734634



Coding profile, is inserted into the slot on the plug or inverted header, red insulating material

Labeled terminal marker

Marker card - SK 3,81/2,8:FORTL.ZAHLEN - 0804109



Marker card, Card, white, labeled, Horizontal: consecutive numbers 1 ... 10, 11 ... 20, etc. up to 91 ... (99)100, mounting type: adhesive, for terminal block width: 3.81 mm, lettering field size: 3.81 x 2.8 mm

Assembly adapters - EMC 1,5-SH - 1877258



Stamp holder, for upper and lower stamp

Additional products

Feed-through header - EMC 1,5/ 2-G-3,81 - 1897801

Accessories

Printed-circuit board connector - FMC 1,5/ 2-ST-3,81 - 1745894



PCB connector, nominal current: 8 A, rated voltage (III/2): 160 V, nominal cross section: 1.5 mm², number of positions: 2, pitch: 3.81 mm, connection method: Push-in spring connection, color: green, contact surface: Tin

Printed-circuit board connector - MC 1,5/ 2-ST-3,81 - 1803578



PCB connector, nominal current: 8 A, rated voltage (III/2): 160 V, nominal cross section: 1.5 mm², number of positions: 2, pitch: 3.81 mm, connection method: Screw connection with tension sleeve, color: green, contact surface: Tin

Printed-circuit board connector - MCVW 1,5/ 2-ST-3,81 - 1826979



PCB connector, nominal current: 8 A, rated voltage (III/2): 160 V, nominal cross section: 1.5 mm², number of positions: 2, pitch: 3.81 mm, connection method: Screw connection with tension sleeve, color: green, contact surface: Tin

Printed-circuit board connector - MCVR 1,5/ 2-ST-3,81 - 1827127



PCB connector, nominal current: 8 A, rated voltage (III/2): 160 V, nominal cross section: 1.5 mm², number of positions: 2, pitch: 3.81 mm, connection method: Screw connection with tension sleeve, color: green, contact surface: Tin

Printed-circuit board connector - FRONT-MC 1,5/ 2-ST-3,81 - 1850660



PCB connector, nominal current: 8 A, rated voltage (III/2): 160 V, nominal cross section: 1.5 mm², number of positions: 2, pitch: 3.81 mm, connection method: Front screw connection, color: green, contact surface: Tin

Feed-through header - EMC 1,5/ 2-G-3,81 - 1897801

Accessories

Printed-circuit board connector - FK-MCP 1,5/ 2-ST-3,81 - 1851041

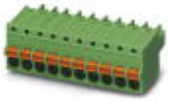

PCB connector, nominal current: 8 A, rated voltage (III/2): 160 V, nominal cross section: 1.5 mm², number of positions: 2, pitch: 3.81 mm, connection method: Push-in spring connection, color: green, contact surface: Tin

Printed-circuit board connector - MCC 1/ 2-STZ-3,81 - 1852176



PCB connector, nominal current: 8 A, rated voltage (III/2): 160 V, nominal cross section: 1 mm², number of positions: 2, pitch: 3.81 mm, connection method: Crimp connection, color: green, Corresponding female crimp contacts with current [A] and conductor cross section range [mm²] data: 5A/MCC-MT 0,2-0,35 (1859988); 8A/MCC-MT 0,5-1,0 (1859991)

Printed-circuit board connector - QC 0,5/ 2-ST-3,81 - 1897393

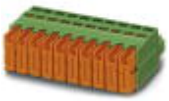

PCB connector, nominal current: 6 A, rated voltage (III/2): 200 V, nominal cross section: 0.5 mm², number of positions: 2, pitch: 3.81 mm, connection method: Displacement connection, color: green, contact surface: Tin

Phoenix Contact 2020 © - all rights reserved
http://www.phoenixcontact.com

PHOENIX CONTACT GmbH & Co. KG
Flachsmarktstr. 8
32825 Blomberg
Germany
Tel. +49 5235 300
Fax +49 5235 3 41200
http://www.phoenixcontact.com