Feed-through header - MCV 1,5/ 5-GF-5,08 - 1847644

Please be informed that the data shown in this PDF Document is generated from our Online Catalog. Please find the complete data in the user's documentation. Our General Terms of Use for Downloads are valid (http://phoenixcontact.com/download)

PCB headers, nominal current: 8 A, rated voltage (III/2): 320 V, nominal cross section: 1.5 mm², number of positions: 5, pitch: 5.08 mm, color: green, contact surface: Tin, mounting: Wave soldering, pin layout: Linear pinning, solder pin [P]: 3.4 mm



The figure shows a 10-position version of the product

Your advantages

- Well-known mounting principle allows worldwide use
- Screwable flange for superior mechanical stability
- Vertical connection enables multi-row arrangement on the PCB
- Maximum flexibility when it comes to device design – one header for connectors with different connection technologies

Key Commercial Data

Packing unit	50 pc
GTIN	4 017918 113773
GTIN	4017918113773

Technical data

Item properties

Brief article description	Feed-through header
Plug-in system	MINI COMBICON
Type of contact	Male connector
Range of articles	MCV 1,5/..-GF
Pitch	5.08 mm
Number of positions	5
Mounting type	Wave soldering
Pin layout	Linear pinning
Locking	Threaded flange
Number of levels	1
Number of connections	5

Feed-through header - MCV 1,5/ 5-GF-5,08 - 1847644

Technical data

Item properties

Number of potentials	5

Electrical parameters

Nominal current	8 A
Nom. voltage	320 V
Rated voltage	250 V
Rated voltage (III/2)	320 V
Rated voltage (II/2)	400 V
Rated surge voltage (III/3)	4 kV
Rated surge voltage (III/2)	4 kV
Rated surge voltage (II/2)	4 kV

Material data - contact

Note	WEEE/RoHS-compliant, free of whiskers according to IEC 60068-2-82/ JEDEC JESD 201
Contact material	Cu alloy
Surface characteristics	Tin-plated
Metal surface contact area (top layer)	Tin (3 - 5 µm Sn)
Metal surface contact area (middle layer)	Nickel (1 - 3 µm Ni),
Metal surface soldering area (top layer)	Tin (3 - 5 µm Sn)
Metal surface soldering area (middle layer)	Nickel (1 - 3 µm Ni)

Material data - housing

Housing color	green (6021)
Insulating material	PBT
Insulating material group	IIIa
CTI according to IEC 60112	225
Flammability rating according to UL 94	V0

Dimensions for the product

Length [l]	7.25 mm
Width [w]	34.52 mm
Height [h]	12.6 mm
Pitch	5.08 mm
Height (without solder pin)	9.2 mm
Solder pin [P]	3.4 mm
Pin dimensions	0.8 x 0.8 mm

Dimensions for PCB design

Hole diameter	1.2 mm

Packaging information

Type of packaging	packed in cardboard
Pieces per package	50

Feed-through header - MCV 1,5/ 5-GF-5,08 - 1847644

Technical data

Packaging information

Denomination packing units	Pcs.

Ambient conditions

Ambient temperature (storage/transport)	-40 °C ... 70 °C
Ambient temperature (assembly)	-5 °C ... 100 °C
Ambient temperature (operation)	-40 °C ... 100 °C (dependent on the derating curve)

Air clearances and creepage distances

Clearances and creepage distances	IEC 60664-1:2007-04
Specification	IEC 60664-1:2007-04
Minimum clearance - inhomogeneous field (III/3)	3 mm
Minimum clearance - inhomogeneous field (III/2)	3 mm
Minimum clearance - inhomogeneous field (II/2)	3 mm
Minimum creepage distance value (III/3)	4 mm
Minimum creepage distance value (III/2)	3.2 mm
Minimum creepage distance value (II/2)	4 mm

Mechanical tests (A)

Test specification	IEC 61984
Insertion strength per pos. approx.	7 N
Withdraw strength per pos. approx.	4 N
Polarization when inserted requirement >20 N	Test passed
Contact holder in insert requirements >20 N	Test passed

Durability tests (B)

Specification	IEC 60512-9-1:2010-03
Contact resistance R_1	1.2 mΩ
Insertion/withdrawal cycles	25
Contact resistance R_2	1.3 mΩ
Impulse withstand voltage at sea level	4.8 kV
Power-frequency withstand voltage	2.21 kV
Insulation resistance, neighboring positions	> 0,4 TΩ

Thermal tests (C)

Specification	IEC 60512-5-1:2002-02
Number of positions	12
Conductor cross section	1.5 mm²
Test current	8 A
Upper limiting temperature requirements <100 °C	Test passed

Climatic tests (D)

Specification	ISO 6988:1985-02
Cold stress	-40 °C/2 h
Thermal stress	100 °C/168 h

Feed-through header - MCV 1,5/ 5-GF-5,08 - 1847644

Technical data

Climatic tests (D)

Corrosive stress	0.2 dm^3 SO_2 on 300 dm^3/40 °C/1 cycle
Impulse withstand voltage at sea level	4.8 kV
Power-frequency withstand voltage	2.21 kV

Environmental and durability tests (E)

Specification	IEC 61984:2008-10
Result, degree of protection, IP code	Finger safety with IP20 test finger

Vibration test

Specification	IEC 60068-2-6:2007-12
Result	Test passed
Frequency	10 - 150 - 10 Hz
Sweep speed	1 octave/min
Amplitude	0.35 mm (10 - 60.1 Hz)
Acceleration	5 g (60.1 - 150 Hz)
Test duration per axis	2.5 h

Standards and Regulations

Connection in acc. with standard	EN-VDE
	CSA
Flammability rating according to UL 94	V0

Environmental Product Compliance

REACh SVHC	Lead 7439-92-1
China RoHS	Environmentally Friendly Use Period = 50 years
	For details about hazardous substances go to tab “Downloads”, Category “Manufacturer's declaration”

Drawings

Feed-through header - MCV 1,5/ 5-GF-5,08 - 1847644

Drilling diagram

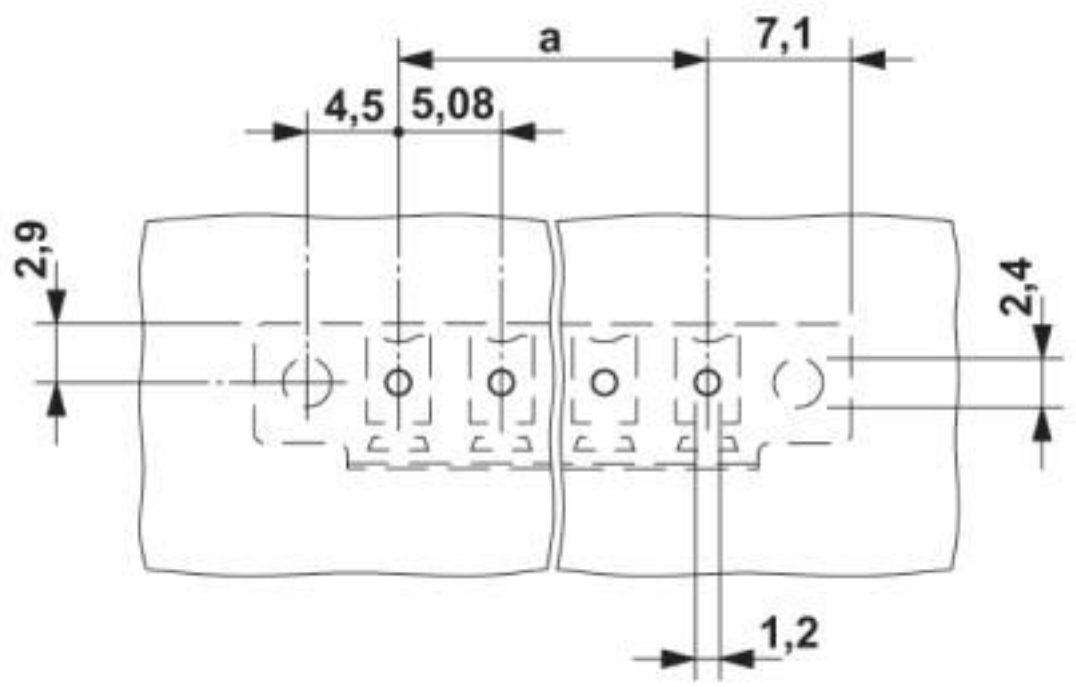

Diagram

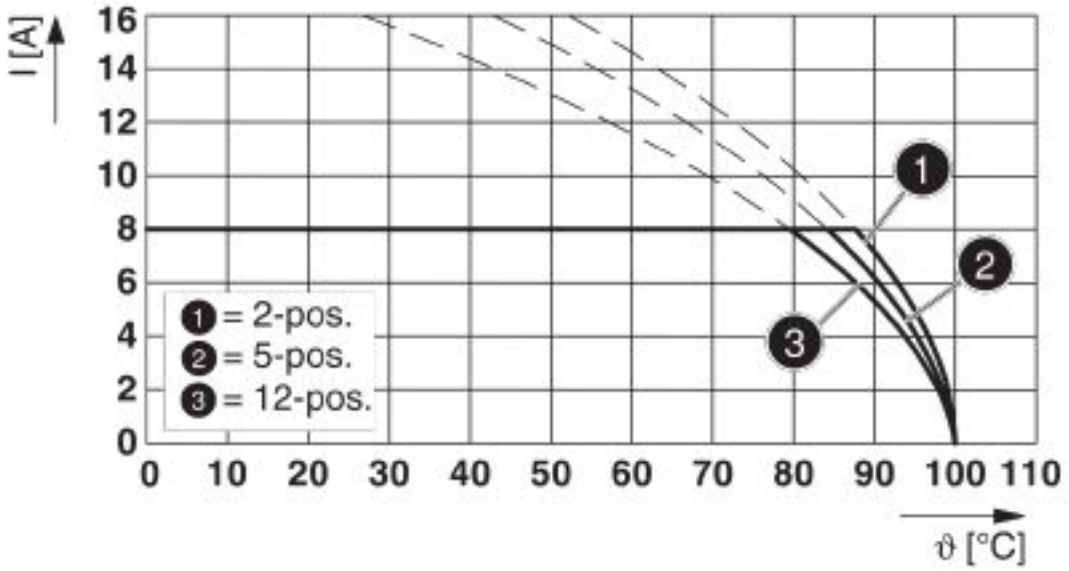

Type: MC 1,5/...-ST1F-5,08 with MCV 1,5/...-GF-5,08

Feed-through header - MCV 1,5/ 5-GF-5,08 - 1847644

Dimensional drawing

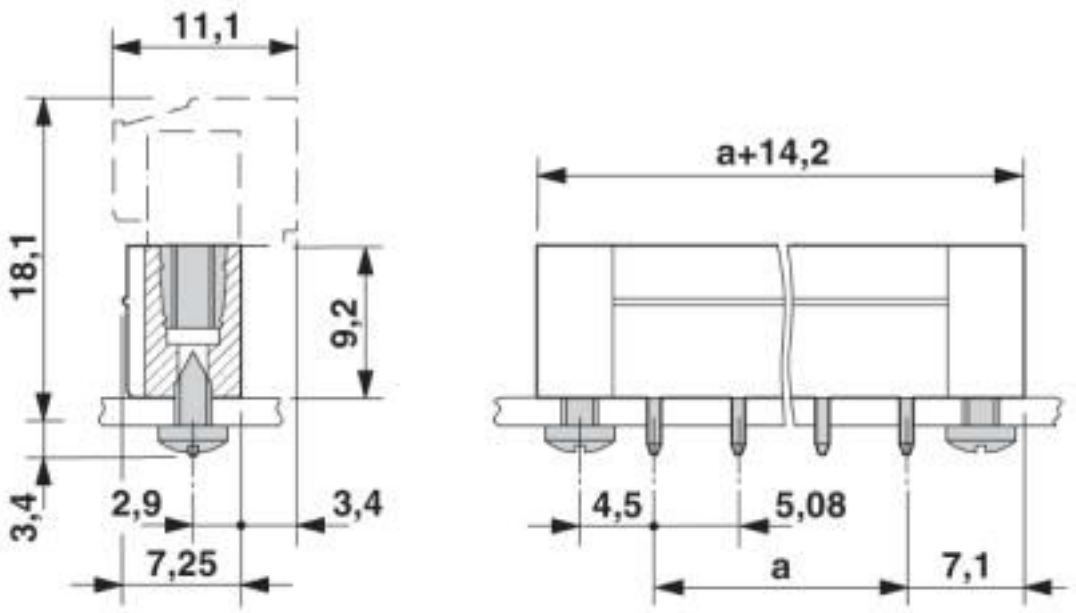

Classifications

eCl@ss

eCl@ss 10.0.1	27440402
eCl@ss 4.0	27260700
eCl@ss 4.1	27260700
eCl@ss 5.0	27260700
eCl@ss 5.1	27260700
eCl@ss 6.0	27260700
eCl@ss 7.0	27440402
eCl@ss 8.0	27440402
eCl@ss 9.0	27440402

ETIM

ETIM 3.0	EC001121
ETIM 4.0	EC002637
ETIM 5.0	EC002637
ETIM 6.0	EC002637
ETIM 7.0	EC002637

UNSPSC

UNSPSC 6.01	30211810
UNSPSC 7.0901	39121409
UNSPSC 11	39121409
UNSPSC 12.01	39121409
UNSPSC 13.2	39121409

Feed-through header - MCV 1,5/ 5-GF-5,08 - 1847644

Classifications

UNSPSC

UNSPSC 18.0	39121409
UNSPSC 19.0	39121409
UNSPSC 20.0	39121409
UNSPSC 21.0	39121409

Approvals

Approvals

Approvals

CSA / IECEE CB Scheme / VDE Gutachten mit Fertigungsüberwachung / EAC / cULus Recognized

Ex Approvals

Approval details

CSA	http://www.csagroup.org/services-industries/product-listing/	13631

	B	D
Nominal voltage UN	300 V	300 V
Nominal current IN	8 A	8 A

IECEE CB Scheme	http://www.iecee.org/	DE1-60987-B1B2

Nominal voltage UN	250 V
Nominal current IN	8 A

VDE Gutachten mit Fertigungsüberwachung	http://www2.vde.com/de/Institut/Online-Service/VDE-gepruefteProdukte/Seiten/Online-Suche.aspx	40011723

Nominal voltage UN	250 V
Nominal current IN	8 A

EAC	B.01687

Feed-through header - MCV 1,5/ 5-GF-5,08 - 1847644

Approvals

cULus Recognized	c UL us	http://database.ul.com/cgi-bin/XYV/template/LISEXT/1FRAME/index.htm	E60425-20110128

	B	D
Nominal voltage UN	300 V	300 V
Nominal current IN	8 A	8 A

Accessories

Accessories

Coding element

Coding profile - CP-MSTB - 1734634



Coding profile, is inserted into the slot on the plug or inverted header, red insulating material

Labeled terminal marker

Marker card - SK 5,08/2,8:FORTL.ZAHLEN - 0804280



Marker card, Card, white, labeled, horizontal: consecutive numbers 1 ... 10, 11 ... 20, etc. up to 91 ... (99)100, mounting type: adhesive, for terminal block width: 5.08 mm, lettering field size: 5.08 x 2.8 mm

Additional products

Printed-circuit board connector - MC 1,5/ 5-STF-5,08 - 1847385



PCB connector, nominal current: 8 A, rated voltage (III/2): 320 V, nominal cross section: 1.5 mm², number of positions: 5, pitch: 5.08 mm, connection method: Screw connection with tension sleeve, color: green, contact surface: Tin

Printed-circuit board connector - MC 1,5/ 5-ST1F-5,08 - 1900918



PCB connector, nominal current: 8 A, rated voltage (III/2): 320 V, nominal cross section: 1.5 mm², number of positions: 5, pitch: 5.08 mm, connection method: Screw connection with tension sleeve, color: green, contact surface: Tin

Feed-through header - MCV 1,5/ 5-GF-5,08 - 1847644

Accessories

Phoenix Contact 2020 © - all rights reserved
http://www.phoenixcontact.com

PHOENIX CONTACT GmbH & Co. KG
Flachsmarktstr. 8
32825 Blomberg
Germany
Tel. +49 5235 300
Fax +49 5235 3 41200
http://www.phoenixcontact.com