HAMMOND MANUFACTURING®

www.hammondmfg.com

183H20

Low Voltage P.C. Board Mounted Power Transformer

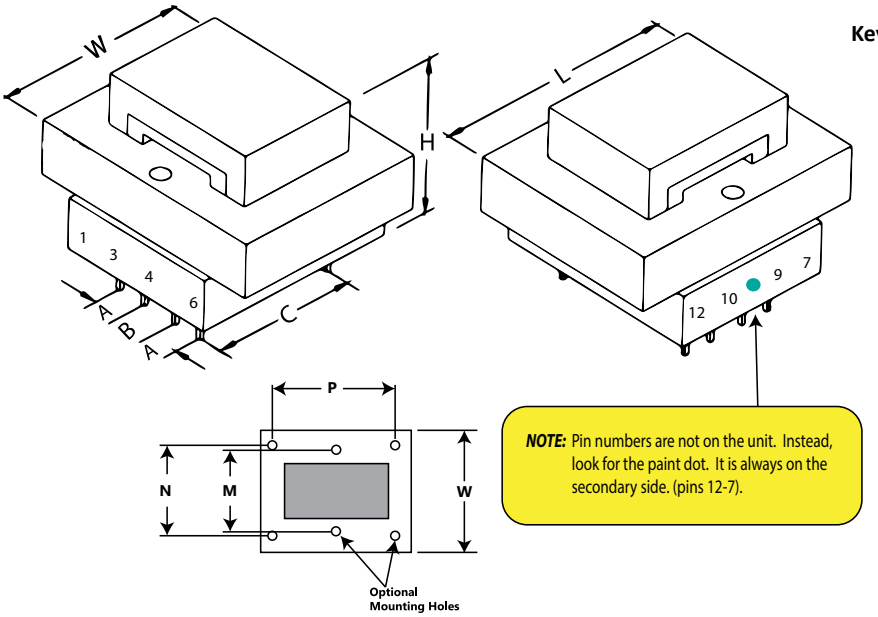

NOTE: Pin numbers are not on the unit. Instead, look for the paint dot. It is always on the secondary side. (pins 12-7).

Key Features:

- **Universal operation on 50/60Hz, 115 or 230V dual primary for worldwide use.**
- **Low Profile, split bobbin with top shroud design**
- **Dual winding secondary, non-concentrically wound.**
- **Low Primary to secondary coupling with no electro-static shield required.**
- **High Insulation - Hipot of 4,000V RMS**
- **Class F Insulation - 155 degrees C.**
- **P.C. Board mount with industry standard pin spacing.**
- **Agency listings: cURus, CE, and TUV.**

Mechanical - inches (mm)	
L	2.25 (57.2)
W	1.88 (47.8)
H	1.63 (41.4)
A	0.4 (10.2)
B	0.4 (10.2)
C	1.46 (37.1)
M	1.5 (38.1)
N	- (-)
P	- (-)
Pin Size	0.036 (0.9)
Screw Type	#4
Weight	0.9 lbs. / 0.41 kg
Electrical	
Size (VA)	20
Primary	115 / 230 VAC
Sec (Series)	20V C.T. @ 1.0A
Sec (Parallel)	10V @ 2A

Connection Information
183 Series Power Transformers

Primary Connections - 183 Series Transformers

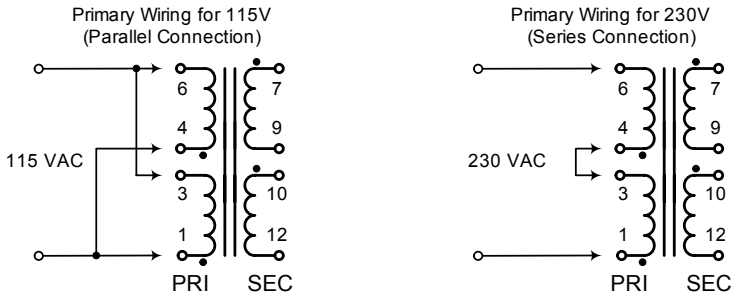

Secondary Connections - 183 Series Transformers

