Extract from the online catalog

MVSTBR 2,5/ 8-ST-5,08

Order No.: 1792304

The figure shows a 10-position version of the product

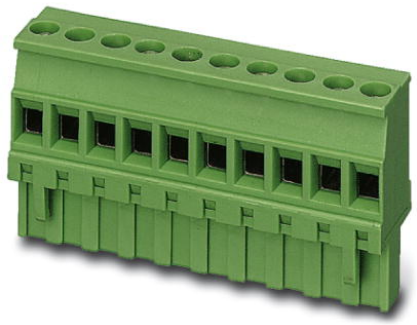

http://eshop.phoenixcontact.de/phoenix/treeViewClick.do?UID=1792304

Plug component, Nominal current: 12 A, Nom. voltage: 250 V, Pitch: 5.08 mm, Number of positions: 8, Connection type: Screw connection, Color: green

Commercial data	
EAN	4017918044787
Pack	50 pcs.
Customs tariff	85366990
Weight/Piece	0.017098 KG
Catalog page information	Page 202 (CC-2009)

Product notes

WEEE/RoHS-compliant since: 01/01/2003

http://www.download.phoenixcontact.com
Please note that the data given here has been taken from the online catalog. For comprehensive information and data, please refer to the user documentation. The General Terms and Conditions of Use apply to Internet downloads.

Technical data

Dimensions / positions

Pitch	5.08 mm
Dimension a	35.56 mm
Number of positions	8
Screw thread	M3

Tightening torque, min	0.5 Nm
Tightening torque max	0.6 Nm

Technical data

Insulating material group	I
Rated surge voltage (III/3)	4 kV
Rated surge voltage (III/2)	4 kV
Rated surge voltage (II/2)	4 kV
Rated voltage (III/2)	320 V
Rated voltage (II/2)	630 V
Connection in acc. with standard	EN-VDE
Nominal current I_N	12 A
Nominal voltage U_N	250 V
Nominal cross section	2.5 mm²
Maximum load current	12 A (with 2.5 mm^2 conductor cross section)
Insulating material	PA
Inflammability class acc. to UL 94	V0
Internal cylindrical gage	A3
Stripping length	7 mm

Connection data

Conductor cross section solid min.	0.2 mm²
Conductor cross section solid max.	2.5 mm²
Conductor cross section stranded min.	0.2 mm²
Conductor cross section stranded max.	2.5 mm²
Conductor cross section stranded, with ferrule without plastic sleeve min.	0.25 mm²
Conductor cross section stranded, with ferrule without plastic sleeve max.	2.5 mm²
Conductor cross section stranded, with ferrule with plastic sleeve min.	0.25 mm²
Conductor cross section stranded, with ferrule with plastic sleeve max.	2.5 mm²
Conductor cross section AWG/kcmil min.	24
Conductor cross section AWG/kcmil max	12
2 conductors with same cross section, solid min.	0.2 mm²
2 conductors with same cross section, solid max.	1 mm²

2 conductors with same cross section, stranded min.	0.2 mm²
2 conductors with same cross section, stranded max.	1.5 mm²
2 conductors with same cross section, stranded, ferrules without plastic sleeve, min.	0.25 mm²
2 conductors with same cross section, stranded, ferrules without plastic sleeve, max.	1 mm²
2 conductors with same cross section, stranded, TWIN ferrules with plastic sleeve, min.	0.5 mm²
2 conductors with same cross section, stranded, TWIN ferrules with plastic sleeve, max.	1.5 mm²

Certificates / Approvals

Certification	CB, CSA, CUL, GOST, UL, VDE-PZI

CSA

Nominal voltage U_N	300 V
Nominal current I_N	10 A
AWG/kcmil	28-12

CUL

Nominal voltage U_N	300 V
Nominal current I_N	10 A
AWG/kcmil	30-12

UL

Nominal voltage U_N	300 V
Nominal current I_N	10 A
AWG/kcmil	30-12

Accessories

Item	Designation	Description
Marking		
1051993	B-STIFT	Marker pen, for manual labeling of unprinted Zack strips, smear-proof and waterproof, line thickness 0.5 mm
0805085	SK 5,08/3,8:SO	Marker card, special printing, self-adhesive, labeled acc. to customer requirements, 12 identical marker strips per card, max. 25-position labeling per strip, color: white
0805412	SK 5,08/3,8:UNBEDRUCKT	Marker cards, unprinted, with pitch divisions, self-adhesive, 10-section marker strips, 12 strips per card, can be labeled with the M-PEN
Tools		
1205053	SZS 0,6X3,5	Screwdriver, bladed, matches all screw terminal blocks up to 4.0 mm² connection cross section, blade: 0.6 x 3.5 mm, without VDE approval

Additional products

Item	Designation	Description
General		
1899197	DFK-MSTBVA 2,5/ 8-G-5,08	Header, Nominal current: 12 A, Nom. voltage: 250 V, Nom. voltage: 250 V, Pitch: 5.08 mm, Number of positions: 8, Color: green, Assembly: Soldering
1880368	EMSTBA 2,5/ 8-G-5,08	Header, Nominal current: 12 A, Nom. voltage: 250 V, Pitch: 5.08 mm, Number of positions: 8, Color: green, Assembly: Press-in
1859577	EMSTBVA 2,5/ 8-G-5,08	Header, Nominal current: 12 A, Nom. voltage: 200 V, Pitch: 5.08 mm, Number of positions: 8, Color: green, Assembly: Press-in
1873414	FKIC 2,5/ 8-ST-5,08	Plug component, Nominal current: 12 A, Nom. voltage: 320 V, Pitch: 5.08 mm, Number of positions: 8, Connection type: Spring-cage conn., Color: green
1823901	ICC 2,5/ 8-STZ-5,08	Plug component, Nominal current: 12 A, Nom. voltage: 250 V, Pitch: 5.08 mm, Number of positions: 8, Connection type: Crimp connection, Color: green
1762431	MDSTB 2,5/ 8-G1-5,08	Header, Nominal current: 10 A, Nom. voltage: 250 V, Pitch: 5.08 mm, Number of positions: 8, Color: green, Assembly: Soldering
1842128	MDSTBA 2,5/ 8-G-5,08	Header, Nominal current: 10 A, Nom. voltage: 250 V, Pitch: 5.08 mm, Number of positions: 8, Color: green, Assembly: Soldering
1762567	MDSTBV 2,5/ 8-G1-5,08	Header, Nominal current: 10 A, Nom. voltage: 250 V, Pitch: 5.08 mm, Number of positions: 8, Color: green, Assembly: Soldering
1845390	MDSTBVA 2,5/ 8-G-5,08	Header, Nominal current: 10 A, Nom. voltage: 250 V, Pitch: 5.08 mm, Number of positions: 8, Color: green, Assembly: Soldering

1759075	MSTB 2,5/ 8-G-5,08	Header, Nominal current: 12 A, Nom. voltage: 250 V, Pitch: 5.08 mm, Number of positions: 8, Color: green, Assembly: Soldering
1770779	MSTB 2,5/ 8-G-5,08-LA	Header, Nominal current: 12 A, Nom. voltage: 250 V, Pitch: 5.08 mm, Number of positions: 8, Assembly: Soldering
1757307	MSTBA 2,5/ 8-G-5,08	Header, Nominal current: 12 A, Nom. voltage: 250 V, Pitch: 5.08 mm, Number of positions: 8, Color: green, Assembly: Soldering
1902806	MSTBA 2,5/ 8-G-5,08 THT	Header, Nominal current: 12 A, Nom. voltage: 250 V, Pitch: 5.08 mm, Number of positions: 8, Color: black, Assembly: SMD/THT/ THR
1771008	MSTBA 2,5/ 8-G-5,08-LA	Header, Nominal current: 12 A, Nom. voltage: 250 V, Pitch: 5.08 mm, Number of positions: 8, Assembly: Soldering
1902877	MSTBVA 2,5/ 8-G-5,08 THT	Header, Nominal current: 12 A, Nom. voltage: 250 V, Pitch: 5.08 mm, Number of positions: 8, Color: black, Assembly: SMD/THT/ THR
1788787	MSTBVK 2,5/ 8-G-5,08	Plug component, Nominal current: 12 A, Nom. voltage: 320 V, Pitch: 5.08 mm, Number of positions: 8, Connection type: Screw connection, Assembly: DIN rail, Color: green
1788596	MVSTBU 2,5/ 8-GB-5,08	Plug component, Nominal current: 12 A, Nom. voltage: 320 V, Pitch: 5.08 mm, Number of positions: 8, Connection type: Screw connection, Assembly: Direct mounting, Color: green
1769528	SMSTB 2,5/ 8-G-5,08	Header, Nominal current: 12 A, Nom. voltage: 250 V, Pitch: 5.08 mm, Number of positions: 8, Color: green, Assembly: Soldering
1767436	SMSTBA 2,5/ 8-G-5,08	Header, Nominal current: 12 A, Nom. voltage: 250 V, Pitch: 5.08 mm, Number of positions: 8, Color: green, Assembly: Soldering
3002076	UK 3-MVSTB-5,08	Feed-through modular terminal block, Nominal current: 12 A, Nominal voltage: 250 V, Cross section: 0.2 mm² - 4 mm², AWG: 24 - 12, Mounting type: NS 32, NS 35/15, NS 35/7,5, Pitch: 5.08 mm, Width: 5.1, Color: gray
3002102	UK 3-MVSTB-5,08-LA 24RD	Feed-through modular terminal block, Nominal current: 12 A, Nominal voltage: 250 V, Cross section: 0.2 mm² - 4 mm², AWG: 24 - 12, Mounting type: NS 32, NS 35/15, NS 35/7,5, Pitch: 5.08 mm, Width: 5.08, Color: gray
3002063	UK 3-MVSTB-5,08/EK	Feed-through modular terminal block, Nominal current: 12 A, Nominal voltage: 250 V, Cross section: 0.2 mm² - 4 mm², AWG: 24 - 12, Mounting type: NS 35/7,5, NS 35/15, NS 32, Pitch: 5.08 mm, Width: 5.1, Color: blue
3002131	UK 3D-MSTBV-5,08	Feed-through modular terminal block, Type of connection: Special and hybrid connection, Screw connection, Cross section: 0.2 mm² - 4 mm², AWG 24 - 12, Width: 5.08 mm, Color: gray, Mounting type: NS 32, NS 35/15, NS 35/7,5
3002144	UK 3D-MSTBV-5,08-LA 24RD	Feed-through modular terminal block, Type of connection: Screw connection, Screw connection, Number of positions: 1, Cross section: 0.2 mm² - 4 mm², AWG 24 - 12, Width: 5.1 mm, Color: gray, Mounting type: NS 32, NS 35/15, NS 35/7,5
3002173	UK 3D-MSTBV-5,08/EK	Feed-through modular terminal block, Type of connection: Screw connection, Screw connection, Cross section: 0.2 mm² - 4 mm², AWG 24 - 12, Width: 5.1 mm, Color: blue, Mounting type: NS 32, NS 35/15, NS 35/7,5

1788172	UMSTBVK 2,5/ 8-G-5,08	Plug component, Nominal current: 12 A, Nom. voltage: 320 V, Pitch: 5.08 mm, Number of positions: 8, Connection type: Screw connection, Assembly: DIN rail, Color: green

Diagrams/Drawings

Diagram

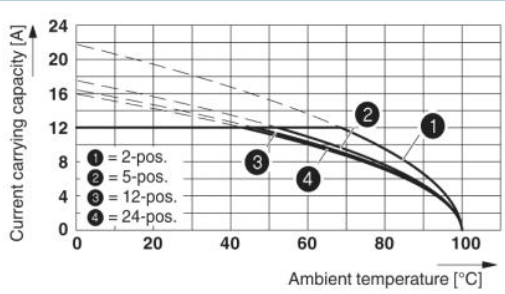

Type: MVSTBR 2,5/...-ST(5,08) with MSTBA 2,5/...-G(-5,08)

Dimensioned drawing

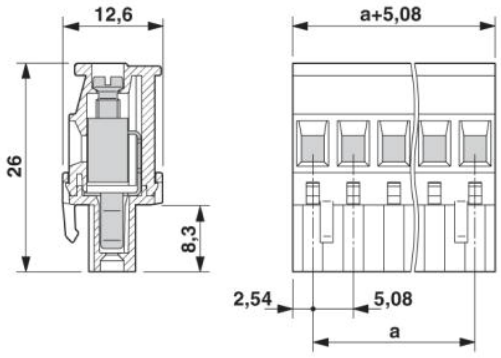

Address

PHOENIX CONTACT Inc., USA
586 Fulling Mill Road
Middletown, PA 17057,USA
Phone (800) 888-7388
Fax (717) 944-1625
http://www.phoenixcon.com



© 2010 Phoenix Contact
Technical modifications reserved;