Printed-circuit board connector - MC 0,5/ 9-G-2,54 P20 THR R44 - 1821313

Please be informed that the data shown in this PDF Document is generated from our Online Catalog. Please find the complete data in the user's documentation. Our General Terms of Use for Downloads are valid (http://phoenixcontact.com/download)

PCB headers, nominal current: 6 A, rated voltage (III/2): 160 V, nominal cross section: 0.5 mm², number of positions: 9, pitch: 2.54 mm, color: black, contact surface: Gold, mounting: THR soldering, pin layout: Linear pinning, solder pin [P]: 2 mm, Sample values available under SAMPLE MC...



The figure shows the 10-position version

Your advantages

- Designed for integration into the SMT soldering process
- Additional solder anchors reduce the mechanical strain on the soldering spots
- Gold-plated contacts ensure transfer quality remains stable over the long term
- Supplied in tape-on-reel packing according to IEC 60286-3 for automated mounting

Key Commercial Data

Packing unit	465 pc
Minimum order quantity	465 pc
GTIN	4 046356 789479
GTIN	4046356789479

Technical data

Dimensions

Length [l]	7.1 mm
Width	27.44 mm
Pitch	2.54 mm
Dimension a	20.32 mm
Width [w]	27.44 mm
Height [h]	6.85 mm
Height	4.85 mm
Length of the solder pin	2 mm
Pin dimensions	0.64 x 0.64 mm

Printed-circuit board connector - MC 0,5/ 9-G-2,54 P20 THR R44 - 1821313

Technical data

Dimensions

Pin spacing	2.54 mm
Length	7.1 mm

General

Range of articles	MC 0,5/..-G-THR
Insulating material group	IIIa
Rated surge voltage (III/3)	2.5 kV
Rated surge voltage (III/2)	2.5 kV
Rated surge voltage (II/2)	2.5 kV
Rated voltage (III/3)	32 V
Rated voltage (III/2)	160 V
Rated voltage (II/2)	160 V
Connection in acc. with standard	EN-VDE
Nominal current I_N	6 A
Insulating material	LCP
Flammability rating according to UL 94	V0
Color	black
Number of positions	9

Standards and Regulations

Connection in acc. with standard	EN-VDE
Flammability rating according to UL 94	V0

Environmental Product Compliance

China RoHS	Environmentally friendly use period: unlimited = EFUP-e
	No hazardous substances above threshold values

Drawings

Printed-circuit board connector - MC 0,5/ 9-G-2,54 P20 THR R44 - 1821313

Drilling diagram

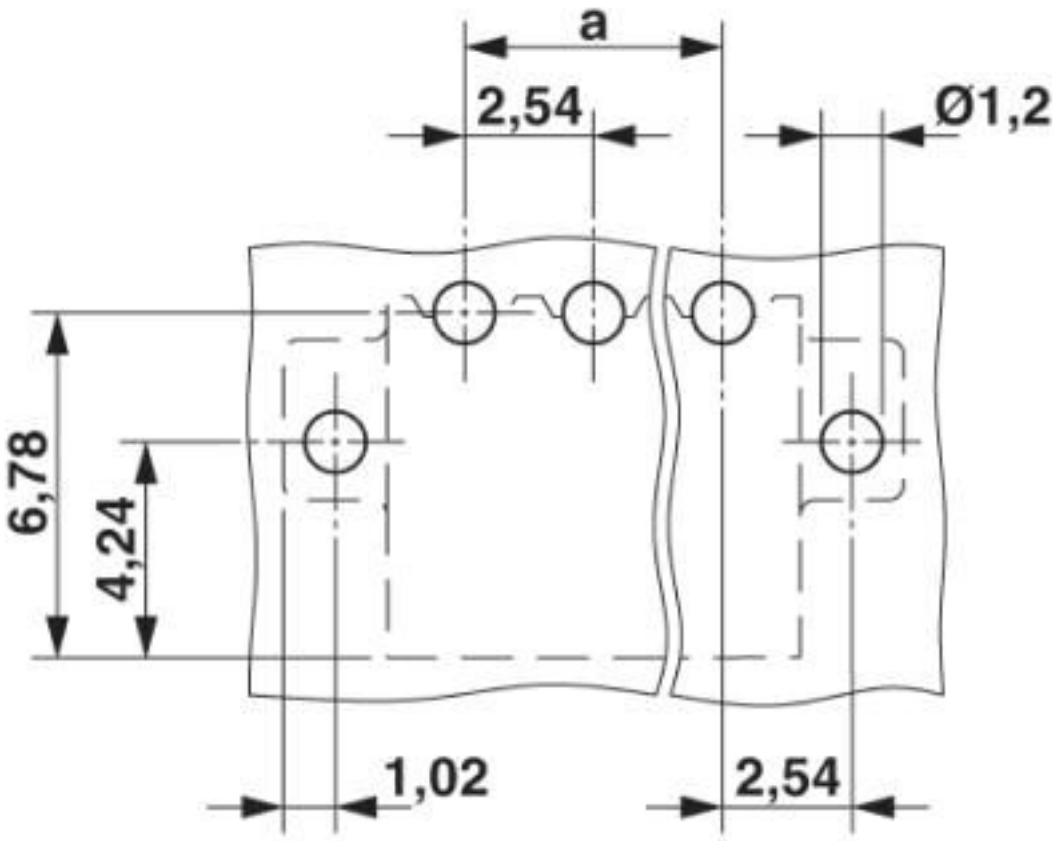

Printed-circuit board connector - MC 0,5/ 9-G-2,54 P20 THR R44 - 1821313

Diagram

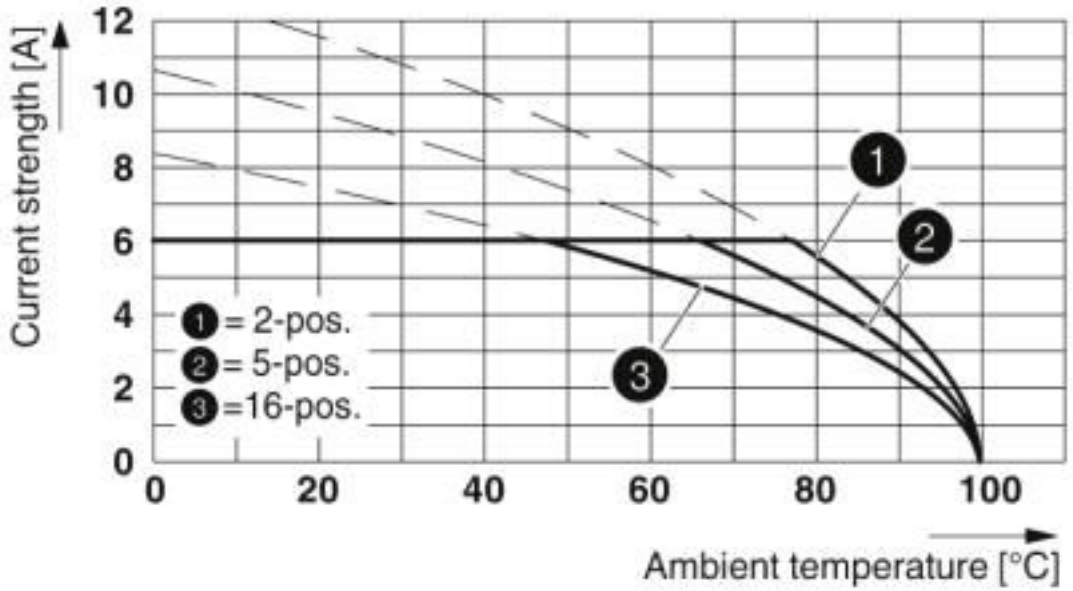

Type: FMC 0,5/...-ST-2,54 with MC 0,5/...-G-2,54 P20 THR R..

Diagram

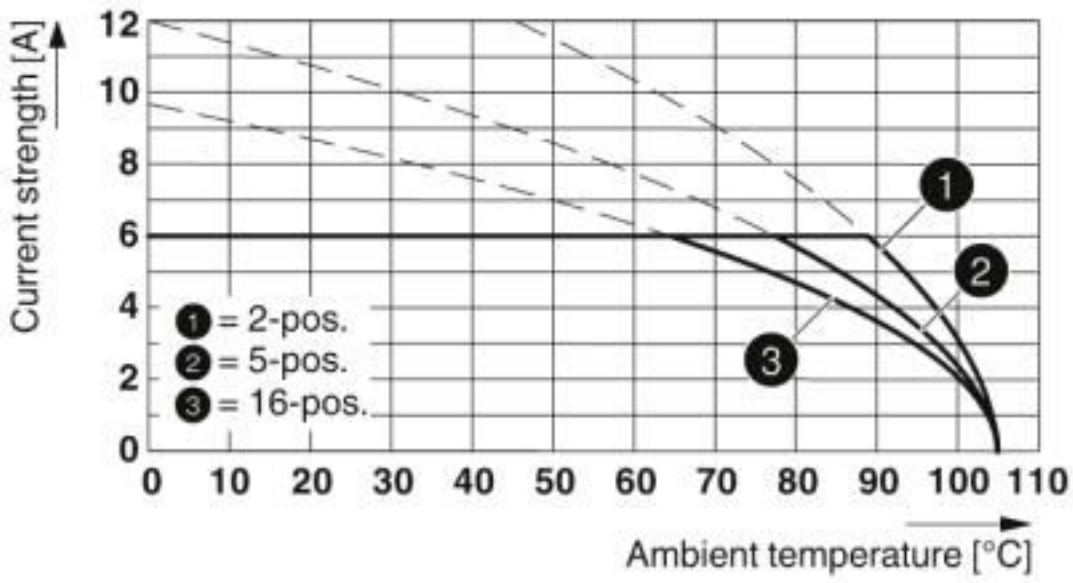

Type: MCC 0,5/...-ST-2,54 with MC 0,5/...-G-2,54 P20 THR R...

Printed-circuit board connector - MC 0,5/ 9-G-2,54 P20 THR R44 - 1821313

Dimensional drawing

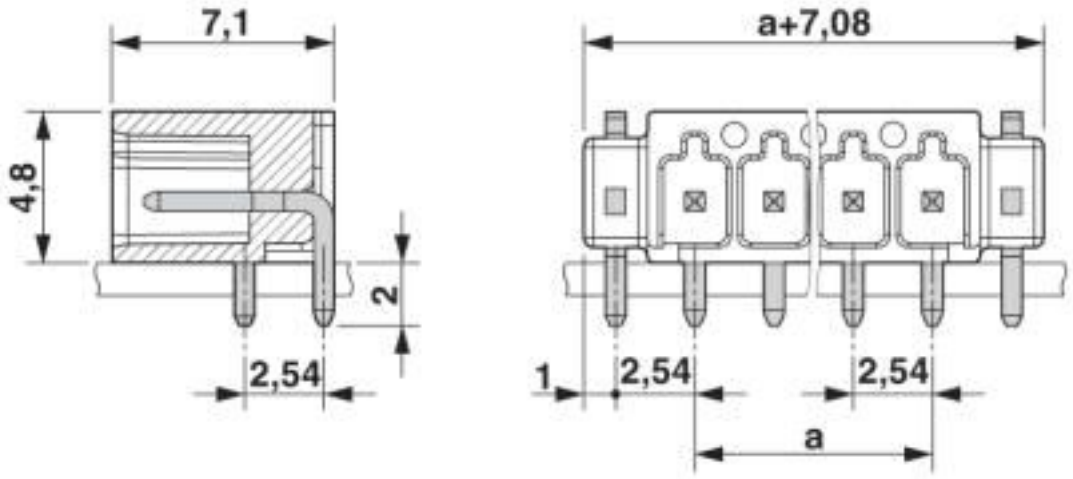

Classifications

eCl@ss

eCl@ss 10.0.1	27440402
eCl@ss 4.0	27260700
eCl@ss 4.1	27260700
eCl@ss 5.0	27260700
eCl@ss 5.1	27260700
eCl@ss 6.0	27260700
eCl@ss 7.0	27440402
eCl@ss 8.0	27440402
eCl@ss 9.0	27440402

ETIM

ETIM 3.0	EC001121
ETIM 4.0	EC002637
ETIM 5.0	EC002637
ETIM 6.0	EC002637
ETIM 7.0	EC002637

UNSPSC

UNSPSC 6.01	30211810
UNSPSC 7.0901	39121409
UNSPSC 11	39121409
UNSPSC 12.01	39121409
UNSPSC 13.2	39121409
UNSPSC 18.0	39121409
UNSPSC 19.0	39121409

Printed-circuit board connector - MC 0,5/ 9-G-2,54 P20 THR R44 - 1821313

Classifications

UNSPSC

UNSPSC 20.0	39121409
UNSPSC 21.0	39121409

Approvals

Approvals

Approvals

IECEE CB Scheme / VDE Gutachten mit Fertigungsüberwachung / EAC / cULus Recognized

Ex Approvals

Approval details

IECEE CB Scheme	CB scheme	http://www.iecee.org/	DE1-63595

Nominal voltage UN	160 V
Nominal current IN	6 A

VDE Gutachten mit Fertigungsüberwachung	VDE	http://www2.vde.com/de/Institut/Online-Service/VDE-gepruefteProdukte/Seiten/Online-Suche.aspx	40042258

Nominal voltage UN	160 V
Nominal current IN	6 A

EAC	EAC	B.01687

cULus Recognized	c UL us	http://database.ul.com/cgi-bin/XYV/template/LISEXT/1FRAME/index.htm	E60425-19920306

	B	C
Nominal voltage UN	150 V	50 V
Nominal current IN	6 A	6 A

Printed-circuit board connector - MC 0,5/ 9-G-2,54 P20 THR R44 - 1821313

Accessories

Accessories

Labeled terminal marker

Marker card - SK 2,54/2,8:FORTL.ZAHLEN - 0804853



Marker card, Card, white, labeled, horizontal: consecutive numbers 1 ... 10, 11 ... 20, etc. up to 91 ... 99, mounting type: adhesive, for terminal block width: 2.54 mm, lettering field size: 2.54 x 2.8 mm

PCB headers

Sample set - SAMPLE MC 0,5/ 9-G-2,54 P20THR - 1836010



PCB headers, nominal current: 6 A, rated voltage (III/2): 160 V, nominal cross section: 0.5 mm², number of positions: 9, pitch: 2.54 mm, color: black, contact surface: Gold, mounting: THR soldering, pin layout: Linear pinning, solder pin [P]: 2 mm

Additional products

Printed-circuit board connector - FMC 0,5/ 9-ST-2,54 - 1821164



PCB connector, nominal current: 6 A, rated voltage (III/2): 160 V, nominal cross section: 0.5 mm², number of positions: 9, pitch: 2.54 mm, connection method: Push-in spring connection, color: black, contact surface: Gold

Phoenix Contact 2020 © - all rights reserved
http://www.phoenixcontact.com

PHOENIX CONTACT GmbH & Co. KG
Flachsmarktstr. 8
32825 Blomberg
Germany
Tel. +49 5235 300
Fax +49 5235 3 41200
http://www.phoenixcontact.com