Printed-circuit board connector - MC 1,5/ 8-ST-3,5-LR - 1816917

Please be informed that the data shown in this PDF Document is generated from our Online Catalog. Please find the complete data in the user's documentation. Our General Terms of Use for Downloads are valid (http://phoenixcontact.com/download)

PCB connector, nominal current: 8 A, rated voltage (III/2): 160 V, nominal cross section: 1.5 mm², number of positions: 8, pitch: 3.5 mm, connection method: Screw connection with tension sleeve, color: green, contact surface: Tin



The figure shows a 10-position version of the product

Your advantages

- Well-known connection principle allows worldwide use
- Low temperature rise, thanks to maximum contact force
- Allows connection of two conductors

Key Commercial Data

Packing unit	50 pc
GTIN	4 046356 753937
GTIN	4046356753937

Technical data

Item properties

Brief article description	Printed-circuit board connector
Plug-in system	MINI COMBICON
Type of contact	Female connector
Range of articles	MC 1,5/..-ST-LR
Pitch	3.5 mm
Number of positions	8
Connection method	Screw connection with tension sleeve
Drive form screw head	Slotted (L)
Screw thread	M2
Locking	Lock & Release ejector lever
Number of levels	1
Number of connections	8

Printed-circuit board connector - MC 1,5/ 8-ST-3,5-LR - 1816917

Technical data

Item properties

Number of potentials	8

Electrical parameters

Nominal current	8 A
Nom. voltage	160 V
Rated voltage	160 V
Rated voltage (III/2)	160 V
Rated voltage (II/2)	320 V
Rated surge voltage (III/3)	2.5 kV
Rated surge voltage (III/2)	2.5 kV
Rated surge voltage (II/2)	2.5 kV

Connection capacity

Connection method	Screw connection with tension sleeve
Conductor cross section solid	0.14 mm² ... 1.5 mm²
Conductor cross section flexible	0.14 mm² ... 1.5 mm²
Conductor cross section AWG / kcmil	28 ... 16
Conductor cross section flexible, with ferrule without plastic sleeve	0.25 mm² ... 1.5 mm²
Conductor cross section, flexible, with ferrule, with plastic sleeve	0.25 mm² ... 0.5 mm²
2 conductors with same cross section, solid	0.08 mm² ... 0.5 mm²
2 conductors with same cross section, flexible	0.08 mm² ... 0.75 mm²
2 conductors with same cross section, flexible, with ferrule without plastic sleeve	0.25 mm² ... 0.34 mm²
2 conductors with the same cross section, flexible, with TWIN ferrule with plastic sleeve	0.5 mm² ... 0.5 mm²
Cylindrical gauge a x b / diameter	2.4 mm x 1.5 mm / 1.6 mm
Stripping length	7 mm
Torque	0.22 Nm ... 0.25 Nm

Flange specifications

Type of locking	Snap-in locking
Mounting flange	Lock & Release ejector lever

Material data - contact

Note	WEEE/RoHS-compliant, free of whiskers according to IEC 60068-2-82/ JEDEC JESD 201
Contact material	Cu alloy
Surface characteristics	hot-dip tin-plated
Metal surface terminal point (top layer)	Tin (4 - 8 µm Sn)
Metal surface contact area (top layer)	Tin (4 - 8 µm Sn)

Material data - housing

Housing color	green (6021)
Insulating material	PA

Printed-circuit board connector - MC 1,5/ 8-ST-3,5-LR - 1816917

Technical data

Material data - housing

Insulating material group	I
CTI according to IEC 60112	600
Flammability rating according to UL 94	V0
Glow wire flammability index GWFI according to EN 60695-2-12	850
Glow wire ignition temperature GWIT according to EN 60695-2-13	775
Temperature for the ball pressure test according to EN 60695-10-2	125 °C

Material data – actuating element

Insulating material	PA
CTI according to IEC 60112	600
Flammability rating according to UL 94	V0

Dimensions for the product

Length [l]	27.5 mm
Width [w]	34.8 mm
Height [h]	13.6 mm
Pitch	3.5 mm
Height (without solder pin)	13.6 mm

Packaging information

Type of packaging	packed in cardboard
Pieces per package	50
Denomination packing units	Pcs.

Ambient conditions

Ambient temperature (storage/transport)	-40 °C ... 70 °C
Ambient temperature (assembly)	-5 °C ... 100 °C
Ambient temperature (operation)	-40 °C ... 100 °C (dependent on the derating curve)

Termination and connection method

Test for conductor damage and slackening	IEC 60999-1:1999-11
	Test passed

Pull-out test

Pull-out test	IEC 60999-1:1999-11
	Test passed
Conductor cross section / conductor type / tensile force	0.14 mm² / solid / > 10 N
	0.14 mm² / flexible / > 10 N
	1.5 mm² / solid / > 40 N
	1.5 mm² / flexible / > 40 N

Mechanical tests according to standard

Test specification	IEC 61984
Visual examination	Test passed IEC 60512-1-1:2002-02
Dimensional test	Test passed IEC 60512-1-2:2002-02

Printed-circuit board connector - MC 1,5/ 8-ST-3,5-LR - 1816917

Technical data

Mechanical tests according to standard

Resistance of marking	Test passed IEC 60068-2-70:1995-12
Result	Test passed
Specification	IEC 60512-13-2:2006-02
No. of cycles	25
Insertion strength per pos. approx.	6 N
Withdraw strength per pos. approx.	4 N
Polarization and coding	Test passed IEC 60512-13-5:2006-02
Result	Test passed
Specification	IEC 60512-15-1:2008-05
Test force per pos.	24.5 N

Air clearances and creepage distances

Clearances and creepage distances	IEC 60664-1:2007-04
Specification	IEC 60664-1:2007-04
Minimum clearance - inhomogeneous field (III/3)	1.5 mm
Minimum clearance - inhomogeneous field (III/2)	1.5 mm
Minimum clearance - inhomogeneous field (II/2)	1.5 mm
Minimum creepage distance value (III/3)	2 mm
Minimum creepage distance value (III/2)	0.8 mm
Minimum creepage distance value (II/2)	1.6 mm
Note on connection cross section	With connected conductor 1.5 mm² (solid).

Current carrying capacity / derating curves

Specification	IEC 61984

Mechanical tests (A)

Test specification	IEC 61984
Insertion strength per pos. approx.	6 N
Withdraw strength per pos. approx.	4 N
Polarization when inserted requirement >20 N	Test passed
Contact holder in insert requirements >20 N	Test passed

Durability tests (B)

Specification	IEC 60512-9-1:2010-03
Contact resistance R_1	1.3 mΩ
Insertion/withdrawal cycles	25
Contact resistance R_2	1.4 mΩ
Impulse withstand voltage at sea level	2.95 kV
Power-frequency withstand voltage	1.39 kV
Insulation resistance, neighboring positions	> 1.6 TΩ

Thermal tests (C)

Specification	IEC 60512-5-1:2002-02

Printed-circuit board connector - MC 1,5/ 8-ST-3,5-LR - 1816917

Technical data

Thermal tests (C)

Number of positions	20
Conductor cross section	1.5 mm²
Test current	8 A DC
Upper limiting temperature requirements <100 °C	Test passed

Climatic tests (D)

Specification	ISO 6988:1985-02
Cold stress	-40 °C/2 h
Thermal stress	100 °C/168 h
Corrosive stress	0.2 dm^3 SO_2 on 300 dm^3/40 °C/1 cycle
Impulse withstand voltage at sea level	2.95 kV
Power-frequency withstand voltage	1.39 kV

Environmental and durability tests (E)

Specification	IEC 61984:2008-10
Result, degree of protection, IP code	Finger safety with IP20 test finger

Environmental Product Compliance

REACh SVHC	Lead 7439-92-1
China RoHS	Environmentally Friendly Use Period = 50 years
	For details about hazardous substances go to tab “Downloads”, Category “Manufacturer's declaration”

Drawings

Dimensional drawing

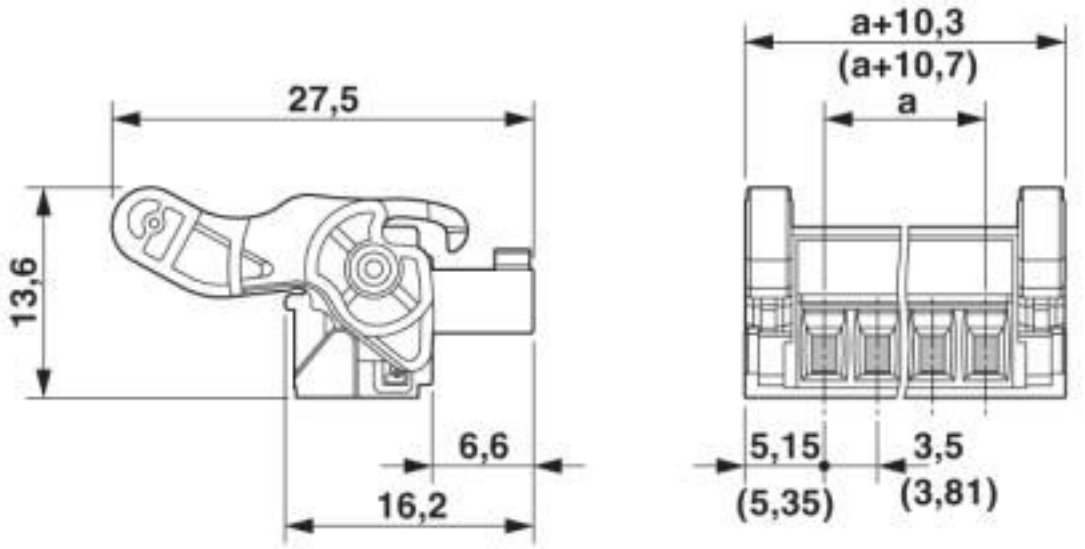

Printed-circuit board connector - MC 1,5/ 8-ST-3,5-LR - 1816917

Dimensional drawing

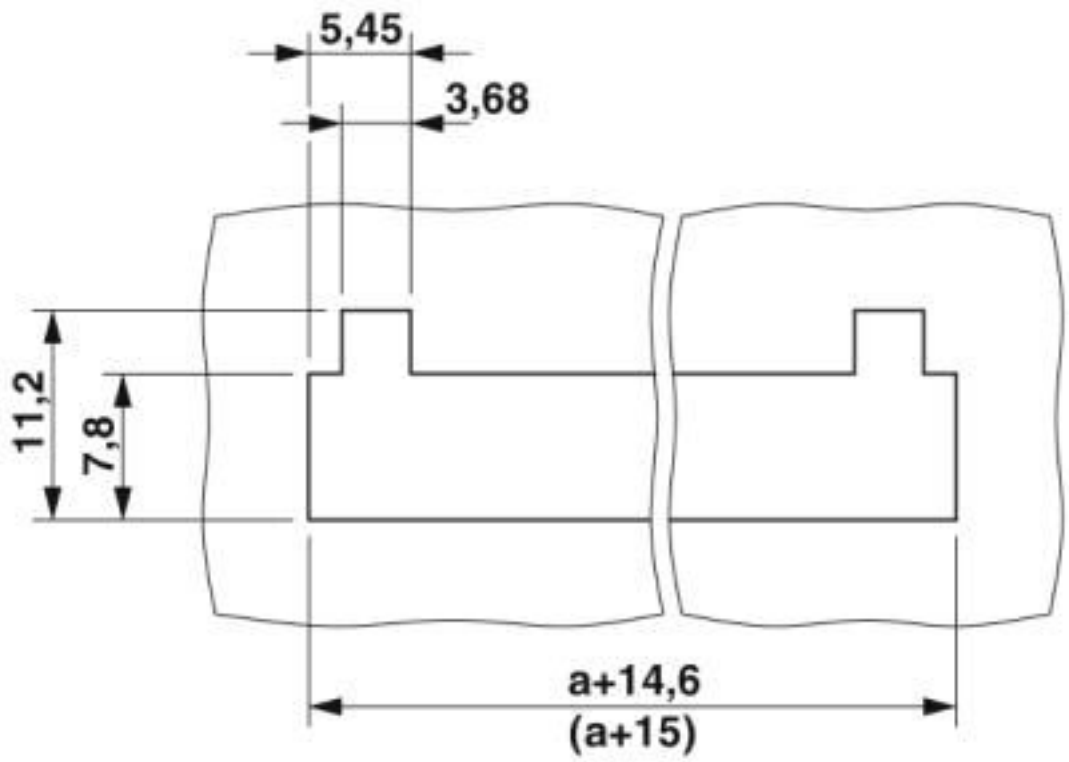

Classifications

eCl@ss

eCl@ss 10.0.1	27440309
eCl@ss 4.0	27260700
eCl@ss 4.1	27260700
eCl@ss 5.0	27260700
eCl@ss 5.1	27260700
eCl@ss 6.0	27260700
eCl@ss 7.0	27440309
eCl@ss 8.0	27440309
eCl@ss 9.0	27440309

ETIM

ETIM 3.0	EC001121
ETIM 4.0	EC002638
ETIM 5.0	EC002637
ETIM 6.0	EC002638
ETIM 7.0	EC002638

UNSPSC

UNSPSC 6.01	30211810

Printed-circuit board connector - MC 1,5/ 8-ST-3,5-LR - 1816917

Classifications

UNSPSC

UNSPSC 7.0901	39121409
UNSPSC 11	39121409
UNSPSC 12.01	39121409
UNSPSC 13.2	39121409
UNSPSC 18.0	39121409
UNSPSC 19.0	39121409
UNSPSC 20.0	39121409
UNSPSC 21.0	39121409

Approvals

Approvals

Approvals

IECEE CB Scheme / VDE Gutachten mit Fertigungsüberwachung / EAC / cULus Recognized

Ex Approvals

Approval details

IECEE CB Scheme	CB scheme	http://www.iecee.org/	DE1-60987-B1B2

Nominal voltage UN	160 V
Nominal current IN	8 A
mm²/AWG/kcmil	0.2-1.5

VDE Gutachten mit Fertigungsüberwachung	VDE	http://www2.vde.com/de/Institut/Online-Service/VDE-gepruefteProdukte/Seiten/Online-Suche.aspx	40011723

Nominal voltage UN	160 V
Nominal current IN	8 A
mm²/AWG/kcmil	0.2-1.5

EAC	EAC	B.01687

Printed-circuit board connector - MC 1,5/ 8-ST-3,5-LR - 1816917

Approvals

cULus Recognized	http://database.ul.com/cgi-bin/XYV/template/LISEXT/1FRAME/index.htm	E60425-20110128

	B	D
Nominal voltage UN	300 V	300 V
Nominal current IN	8 A	8 A
mm²/AWG/kcmil	30-14	30-14

Accessories

Accessories

Labeled terminal marker

Marker card - SK 3,5/2,8:FORTL.ZAHLEN - 0804073



Marker card, Card, white, labeled, horizontal: consecutive numbers 1 ... 10, 11 ... 20, etc. up to 91 ... 99, mounting type: adhesive, for terminal block width: 3.5 mm, lettering field size: 3.5 x 2.8 mm

Screwdriver tools

Screwdriver - SZS 0,4X2,5 VDE - 1205037



Screwdriver, slot-headed, VDE insulated, size: 0.4 x 2.5 x 80 mm, 2-component grip, with non-slip grip

Additional products

Printed-circuit board connector - MC 1,5/ 8-GF-3,5-LR - 1817673



PCB headers, nominal current: 8 A, rated voltage (III/2): 160 V, nominal cross section: 1.5 mm², number of positions: 8, pitch: 3.5 mm, color: green, contact surface: Tin, mounting: Wave soldering, pin layout: Linear pinning, solder pin [P]: 3.4 mm

Printed-circuit board connector - MC 1,5/ 8-ST-3,5-LR - 1816917

Accessories

Feed-through header - MCV 1,5/ 8-GF-3,5-LR - 1818054



PCB headers, nominal current: 8 A, rated voltage (III/2): 160 V, nominal cross section: 1.5 mm², number of positions: 8, pitch: 3.5 mm, color: green, contact surface: Tin, mounting: Wave soldering, pin layout: Linear pinning, solder pin [P]: 3.4 mm

Phoenix Contact 2020 © - all rights reserved
http://www.phoenixcontact.com

PHOENIX CONTACT GmbH & Co. KG
Flachsmarktstr. 8
32825 Blomberg
Germany
Tel. +49 5235 300
Fax +49 5235 3 41200
http://www.phoenixcontact.com