Printed-circuit board connector - MSTBC 2,5/10-STZFD-5,08 - 1809352

Please be informed that the data shown in this PDF Document is generated from our Online Catalog. Please find the complete data in the user's documentation. Our General Terms of Use for Downloads are valid (http://download.phoenixcontact.com)

Plug component, Nominal current: 12 A, Rated voltage (III/2): 320 V, Number of positions: 10, Pitch: 5.08 mm, Connection method: Crimp connection, Color: green, Assembly: Direct mounting, Corresponding female crimp contacts with current [A] and conductor cross section range [mm²] data: 10A/MSTBC-MT 0,5-1,0 (3190564); 10A/MSTBC-MT 0,5-1,0 BA (3190645); 12A/MSTBC-MT 1,5-2,5 (3190551); 12A/MSTBC-MT 1,5-2,5 BA (3190658). BA = Bandkontakte



The illustration shows a 15-position version

Key commercial data

Packing unit	1 pc
GTIN	4 017918 047498
Weight per Piece (excluding packing)	6.32 GRM
Custom tariff number	85366990
Country of origin	Poland

Technical data

Dimensions

Height	10.7 mm
Pitch	5.08 mm
Dimension a	45.72 mm

General

Range of articles	MSTBC 2,5/..-STZFD
Insulating material group	I
Rated surge voltage (III/3)	4 kV
Rated surge voltage (III/2)	4 kV
Rated surge voltage (II/2)	4 kV
Rated voltage (III/3)	320 V
Rated voltage (III/2)	320 V

Printed-circuit board connector - MSTBC 2,5/10-STZFD-5,08 - 1809352

Technical data

General

Rated voltage (II/2)	630 V
Connection in acc. with standard	EN-VDE
Nominal current I_N	12 A
Nominal cross section	2.5 mm²
Maximum load current	12 A (with 2.5 mm² conductor cross section)
Insulating material	PA
Inflammability class according to UL 94	V0
Number of positions	10

Connection data

Conductor cross section stranded min.	0.5 mm²
Conductor cross section stranded max.	2.5 mm²
Conductor cross section AWG/kcmil min.	20
Conductor cross section AWG/kcmil max	14
Minimum AWG according to UL/CUL	20
Maximum AWG according to UL/CUL	14

Classifications

eCl@ss

eCl@ss 4.0	272607xx
eCl@ss 4.1	27260701
eCl@ss 5.0	27260701
eCl@ss 5.1	27260701
eCl@ss 6.0	27260704
eCl@ss 7.0	27440402
eCl@ss 8.0	27440402

ETIM

ETIM 3.0	EC001121
ETIM 4.0	EC002638
ETIM 5.0	EC002638

UNSPSC

UNSPSC 6.01	30211810
UNSPSC 7.0901	39121409
UNSPSC 11	39121409
UNSPSC 12.01	39121409

Printed-circuit board connector - MSTBC 2,5/10-STZFD-5,08 - 1809352

Classifications

UNSPSC

UNSPSC 13.2	39121409

Drawings

Drilling diagram

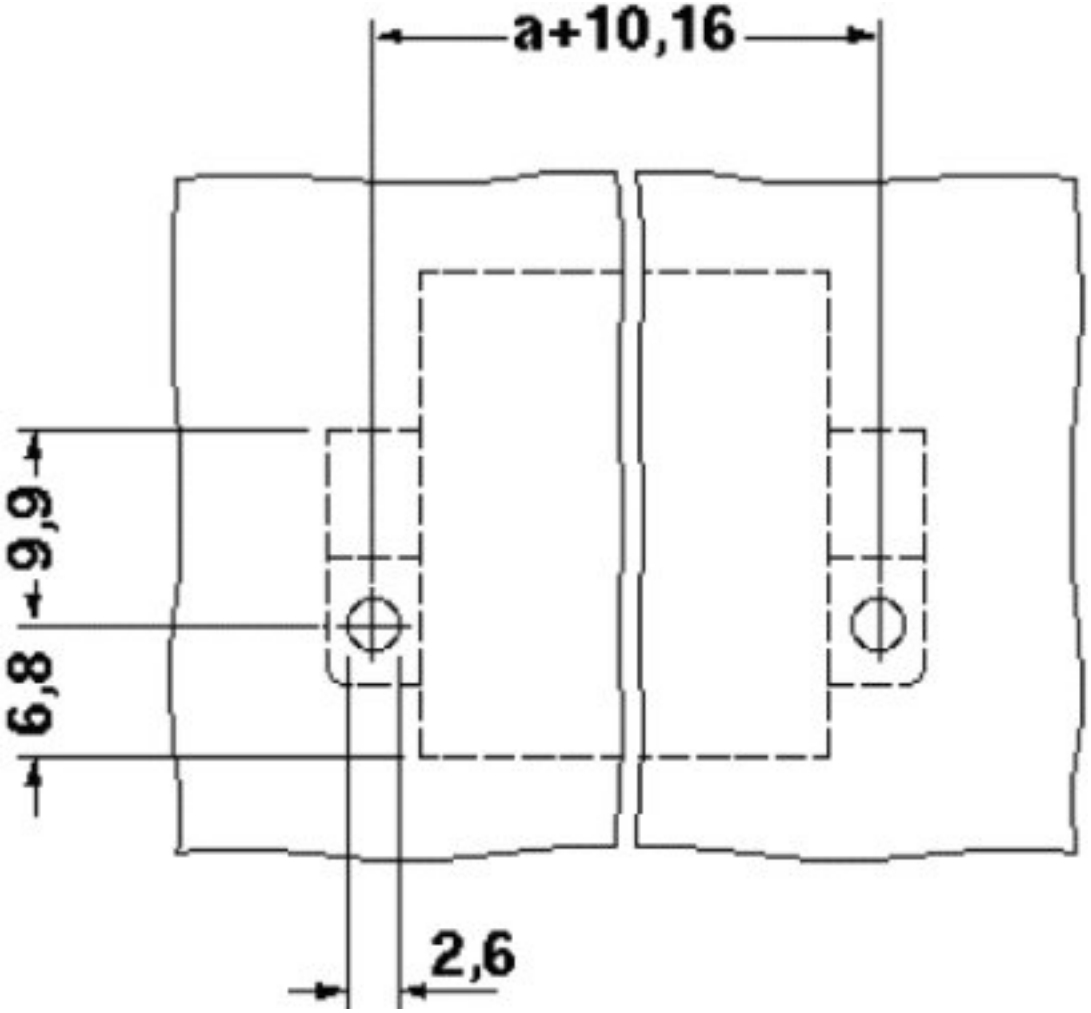

Printed-circuit board connector - MSTBC 2,5/10-STZFD-5,08 - 1809352

Dimensioned drawing

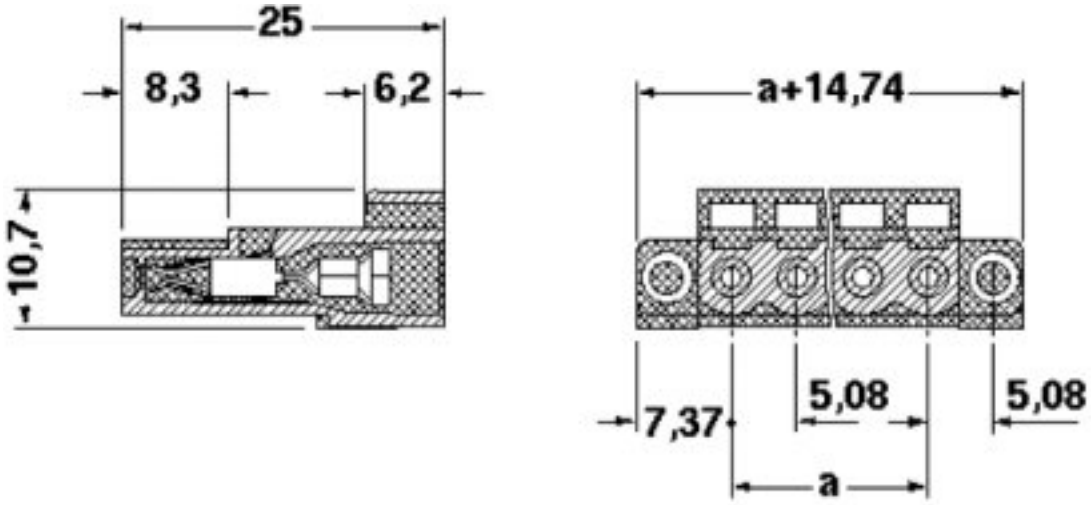

Phoenix Contact 2014 © - all rights reserved
http://www.phoenixcontact.com