Feed-through header - PCV 4/ 7-G-7,62 - 1804739

Please be informed that the data shown in this PDF Document is generated from our Online Catalog. Please find the complete data in the user's documentation. Our General Terms of Use for Downloads are valid (http://phoenixcontact.com/download)



The figure shows a 5-pos. version of the product

PCB headers, nominal current: 20 A, rated voltage (III/2): 630 V, nominal cross section: 4 mm², number of positions: 7, pitch: 7.62 mm, color: green, contact surface: Tin, mounting: Wave soldering, pin layout: Linear pinning, solder pin [P]: 5 mm, Mounting flange: Accessory Order No. 1827570

Your advantages

- Well-known mounting principle allows worldwide use
- Maximum flexibility when it comes to device design – one header for connectors with different connection technologies
- Easy PCB replacement thanks to plug-in modules

Key Commercial Data

Packing unit	50 pc
GTIN	4 017918 046170
GTIN	4017918046170

Technical data

Item properties

Brief article description	Feed-through header
Plug-in system	POWER COMBICON 4
Type of contact	Male connector
Range of articles	PCV 4/..-G
Pitch	7.62 mm
Number of positions	7
Mounting type	Wave soldering
Pin layout	Linear pinning
Locking	without
Number of levels	1
Number of connections	7
Number of potentials	7

Feed-through header - PCV 4/ 7-G-7,62 - 1804739

Technical data

Electrical parameters

Nominal current	20 A
Nom. voltage	630 V
Rated voltage	400 V
Rated voltage (III/2)	630 V
Rated voltage (II/2)	630 V
Rated surge voltage (III/3)	6 kV
Rated surge voltage (III/2)	6 kV
Rated surge voltage (II/2)	6 kV

Material data - contact

Note	WEEE/RoHS-compliant, free of whiskers according to IEC 60068-2-82/ JEDEC JESD 201
Contact material	Cu alloy
Surface characteristics	Tin-plated
Metal surface contact area (top layer)	Tin (5 - 10 µm Sn)
Metal surface contact area (middle layer)	Nickel (2 - 5 µm Ni),
Metal surface soldering area (top layer)	Tin (5 - 10 µm Sn)
Metal surface soldering area (middle layer)	Nickel (2 - 5 µm Ni)

Material data - housing

Housing color	green (6021)
Insulating material	PA
Insulating material group	I
CTI according to IEC 60112	600
Flammability rating according to UL 94	V0
Glow wire flammability index GWFI according to EN 60695-2-12	850
Glow wire ignition temperature GWIT according to EN 60695-2-13	775
Temperature for the ball pressure test according to EN 60695-10-2	125 °C

Dimensions for the product

Length [l]	14.25 mm
Width [w]	53.3 mm
Height [h]	34 mm
Pitch	7.62 mm
Height (without solder pin)	29 mm
Solder pin [P]	5 mm
Pin spacing	7.62 mm
Pin dimensions	1 x 0.8 mm

Dimensions for PCB design

Hole diameter	1.3 mm
Pin spacing	7.62 mm

Packaging information

Feed-through header - PCV 4/ 7-G-7,62 - 1804739

Technical data

Packaging information

Type of packaging	packed in cardboard
Pieces per package	50
Denomination packing units	Pcs.

General product information

Type of note	Notes on operation
Note	In accordance with IEC 61984, COMBICON connectors have no switching power (COC). During designated use, they must not be plugged in or disconnected when carrying voltage or under load.

Ambient conditions

Ambient temperature (storage/transport)	-40 °C ... 70 °C
Ambient temperature (assembly)	-5 °C ... 100 °C
Ambient temperature (operation)	-40 °C ... 100 °C (dependent on the derating curve)

Air clearances and creepage distances

Clearances and creepage distances	IEC 60664-1:2007-04
Specification	IEC 60664-1:2007-04
Minimum clearance - inhomogeneous field (III/3)	5.5 mm
Minimum clearance - inhomogeneous field (III/2)	5.5 mm
Minimum clearance - inhomogeneous field (II/2)	5.5 mm
Minimum creepage distance value (III/3)	5 mm
Minimum creepage distance value (III/2)	3.2 mm
Minimum creepage distance value (II/2)	3.2 mm

Current carrying capacity / derating curves

Caption	Derating curve for: PC 5/...-ST1-7,62 with PCV 4/....-G-7,62 Conductor cross section: 4 mm²
Specification	IEC 61984:2008-10
Reduction factor	0.8
Note	Representation based on IEC 60512-5-2:2002-02
	For number of positions, see diagram

Mechanical tests (A)

Test specification	IEC 61984
Insertion strength per pos. approx.	8 N
Withdraw strength per pos. approx.	6 N
Polarization when inserted requirement >20 N	Test passed
Contact holder in insert requirements >20 N	Test passed

Durability tests (B)

Specification	IEC 60512-5:1992-08
Contact resistance R_1	0.45 mΩ
Insertion/withdrawal cycles	50
Contact resistance R_2	0.6 mΩ

Feed-through header - PCV 4/ 7-G-7,62 - 1804739

Technical data

Durability tests (B)

Impulse withstand voltage at sea level	7.3 kV
Power-frequency withstand voltage	3.31 kV
Insulation resistance, neighboring positions	$>10^{12}\ \Omega$

Thermal tests (C)

Specification	IEC 60512-5-1:2002-02
Number of positions	12
Conductor cross section	4 mm²

Climatic tests (D)

Specification	ISO 6988:1985-02
Cold stress	-40 °C/2 h
Thermal stress	100 °C/168 h
Corrosive stress	0.2 dm^3 SO_2 on 300 dm^3/40 °C/1 cycle
Impulse withstand voltage at sea level	7.3 kV
Power-frequency withstand voltage	3.31 kV

Environmental and durability tests (E)

Specification	IEC 61984:2008-10
Result, degree of protection, IP code	Finger safety with IP20 test finger

Standards and Regulations

Connection in acc. with standard	EN-VDE
	CSA
Flammability rating according to UL 94	V0

Environmental Product Compliance

China RoHS	Environmentally friendly use period: unlimited = EFUP-e
	No hazardous substances above threshold values

Drawings

Feed-through header - PCV 4/ 7-G-7,62 - 1804739

Drilling diagram

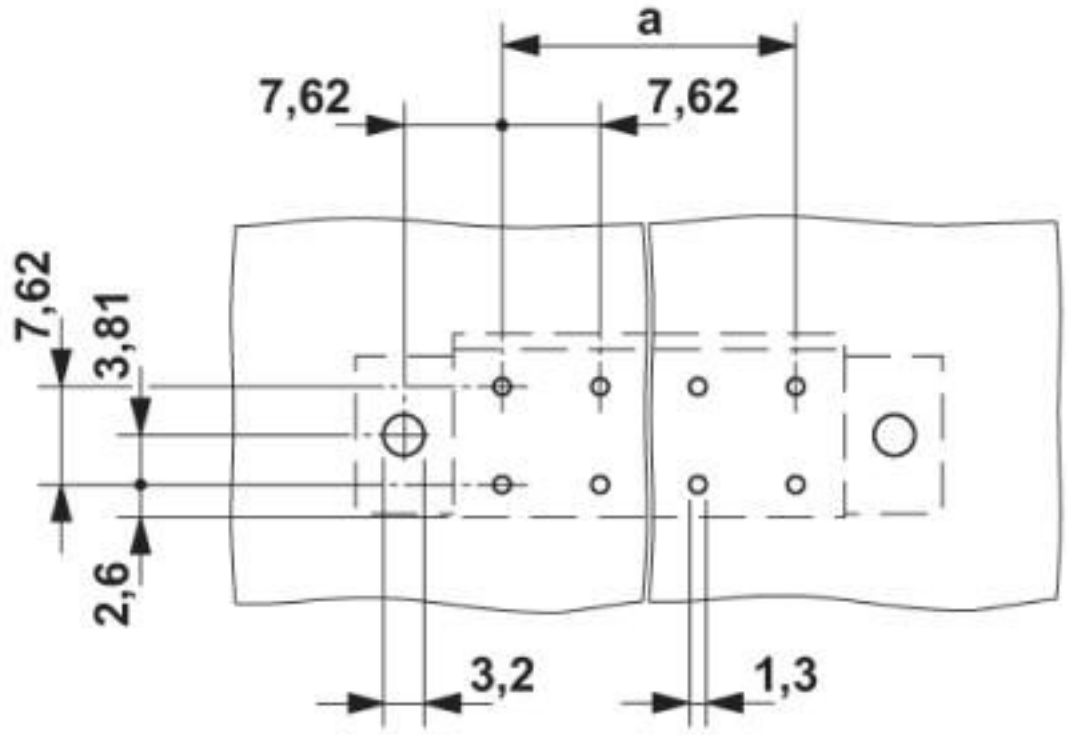

Diagram

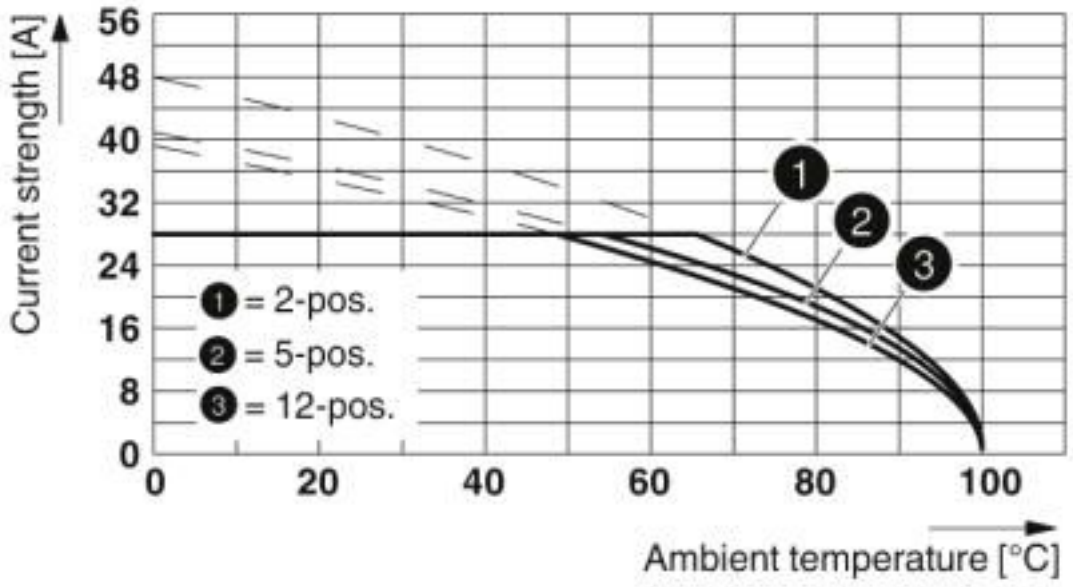

Derating curve for: PC 5/...-ST1-7,62 with PCV 4/....-G-7,62
Conductor cross section: 4 mm²

Feed-through header - PCV 4/ 7-G-7,62 - 1804739

Diagram

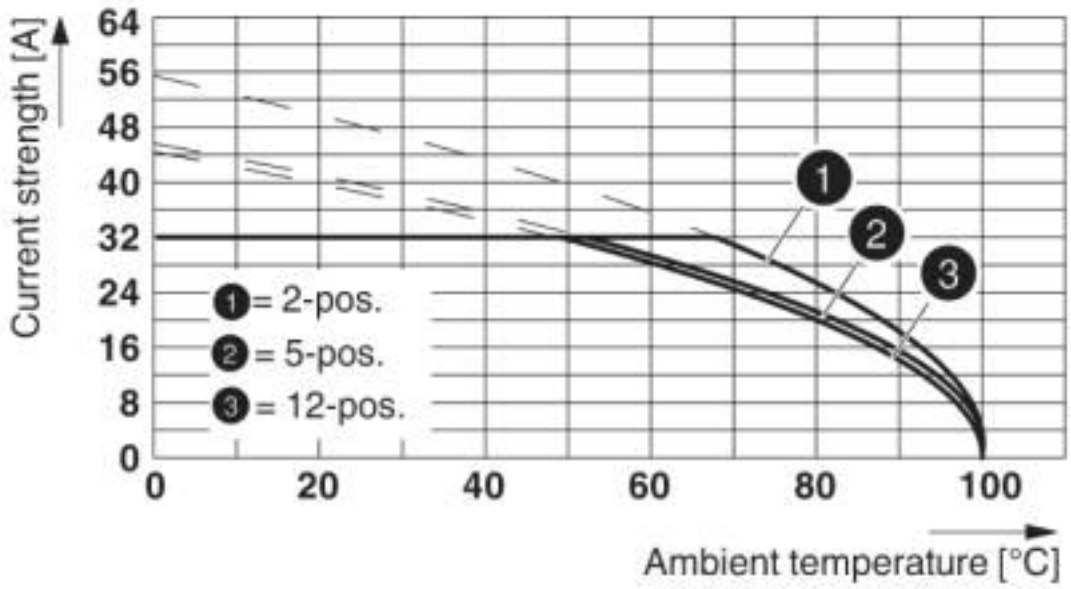

Derating curve for: PC 5/...-ST1-7,62 with PCV 4/....-G-7,62
Conductor cross section: 6 mm²

Feed-through header - PCV 4/ 7-G-7,62 - 1804739

Dimensional drawing

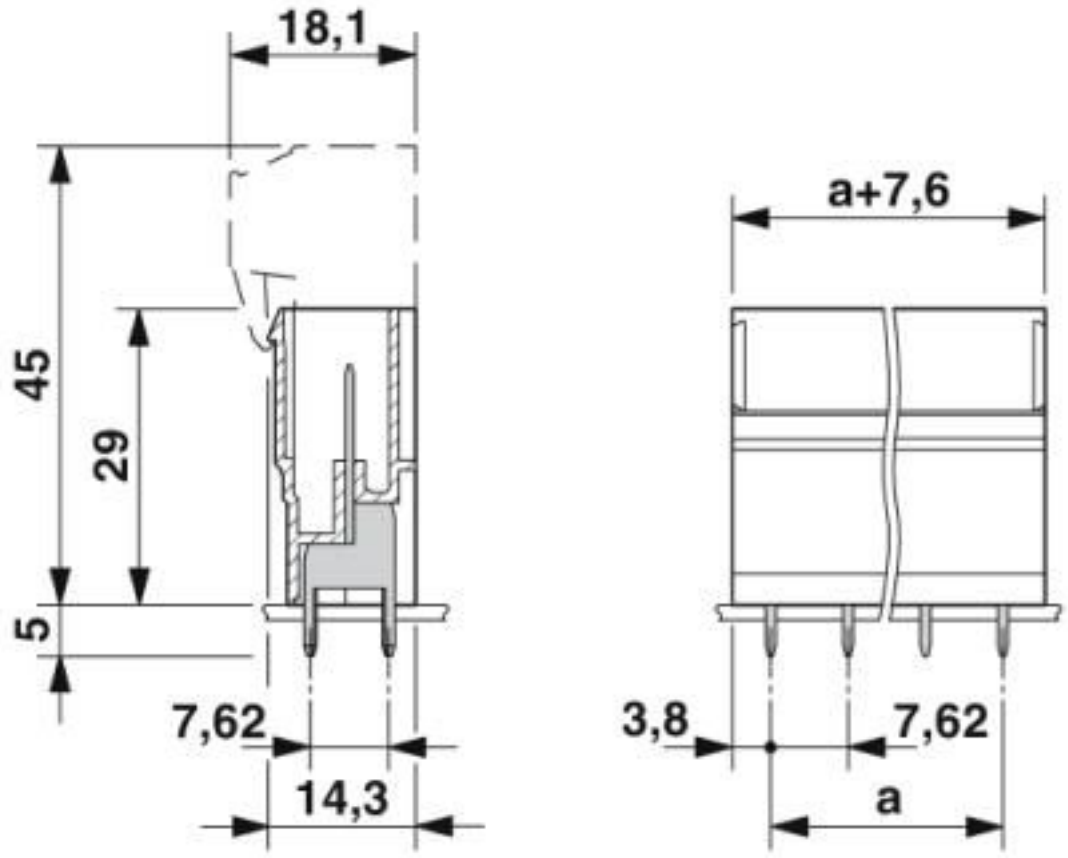

Classifications

eCl@ss

eCl@ss 10.0.1	27440402
eCl@ss 4.0	27260700
eCl@ss 4.1	27260700
eCl@ss 5.0	27260700
eCl@ss 5.1	27260700
eCl@ss 6.0	27260700
eCl@ss 7.0	27440402
eCl@ss 8.0	27440402
eCl@ss 9.0	27440402

ETIM

ETIM 3.0	EC001121
ETIM 4.0	EC002637
ETIM 5.0	EC002637
ETIM 6.0	EC002637
ETIM 7.0	EC002637

Feed-through header - PCV 4/ 7-G-7,62 - 1804739

Classifications

UNSPSC

UNSPSC 6.01	30211810
UNSPSC 7.0901	39121409
UNSPSC 11	39121409
UNSPSC 12.01	39121409
UNSPSC 13.2	39121409
UNSPSC 18.0	39121409
UNSPSC 19.0	39121409
UNSPSC 20.0	39121409
UNSPSC 21.0	39121409

Approvals

Approvals

Approvals

DNV GL / CSA / RS / BV / LR / EAC / cULus Recognized

Ex Approvals

Approval details

DNV GL	https://approvalfinder.dnvgl.com/	TAE00001EZ

CSA	http://www.csagroup.org/services-industries/product-listing/	13631

	B	C
Nominal voltage UN	300 V	300 V
Nominal current IN	20 A	20 A

RS	http://www.rs-head.spb.ru/en/index.php	17.00014.272

BV	http://www.veristar.com/portal/veristarinfo/generalinfo/approved/approvedProducts/equipmentAndMaterials	35433/B0 BV

Feed-through header - PCV 4/ 7-G-7,62 - 1804739

Approvals

LR	Lloyd's Register	http://www.lr.org/en	96/20012

EAC	EAC	B.01687

cULus Recognized	c UL us	http://database.ul.com/cgi-bin/XYV/template/LISEXT/1FRAME/index.htm	E60425-19920722

	B	C
Nominal voltage UN	300 V	300 V
Nominal current IN	30 A	30 A

Accessories

Accessories

Coding element

Coding profile - CP-PC RD - 1701967



Coding profile, for plugging into the coding ribs of the plug at a later date, insulating material, color: Red

Flange

Mounting flange - BF-PC 4 - 1827570



Mounting flange, is snapped onto the left and right of the headers, for screw connection with PC 4/...-STF-7.62

Labeled terminal marker

Feed-through header - PCV 4/ 7-G-7,62 - 1804739

Accessories

Marker card - SK 7,62/3,8:FORTL.ZAHLEN - 0804549



Marker card, Card, white, labeled, horizontal: consecutive numbers 1 ... 10, 11 ... 20, etc. up to 91 ... 100, mounting type: adhesive, for terminal block width: 7.62 mm, lettering field size: 7.62 x 3.8 mm

Marker pen

Marker pen - B-STIFT - 1051993



Marker pen, for manual labeling of unprinted Zack strips, smear-proof and waterproof, line thickness 0.5 mm

Terminal marking

Marker card - SK U/3,8 WH:UNBEDRUCKT - 0803906



Marker card, Sheet, white, unlabeled, can be labeled with: PLOTMARK, CMS-P1-PLOTTER, Office printing systems, mounting type: adhesive, for terminal block width: 210 mm, lettering field size: 186 x 3.8 mm, Number of individual labels: 1440

Additional products

Printed-circuit board connector - PC 4/ 7-ST-7,62 - 1804959



PCB connector, nominal current: 20 A, rated voltage (III/2): 630 V, nominal cross section: 4 mm², number of positions: 7, pitch: 7.62 mm, connection method: Screw connection with tension sleeve, color: green, contact surface: Tin

Printed-circuit board connector - PCC 4/ 7-ST-7,62 - 1840146



PCB connector, nominal current: 20 A, rated voltage (III/2): 1000 V, nominal cross section: 4 mm², number of positions: 7, pitch: 7.62 mm, connection method: Crimp connection, color: green, Corresponding female crimp contacts with current [A] and conductor cross section range [mm²] data: 13,5A/STG-MTN 0,5-1,0 (3190438); 13,5A/STG-MTN 0,5-1,0 BA (3190629); 20A/STG-MTN 1,5-2,5 (3190506); 20A/STG-MTN 1,5-2,5 BA (3190632). BA = Taped contacts

Feed-through header - PCV 4/ 7-G-7,62 - 1804739

Accessories

Printed-circuit board connector - PC 4 HV/ 7-ST-7,62 - 1880041



PCB connector, number of positions: 7, pitch: 7.62 mm, color: green, contact surface: Tin

Phoenix Contact 2020 © - all rights reserved
http://www.phoenixcontact.com

PHOENIX CONTACT GmbH & Co. KG
Flachsmarktstr. 8
32825 Blomberg
Germany
Tel. +49 5235 300
Fax +49 5235 3 41200
http://www.phoenixcontact.com