Extract from the online catalog

MCVW 1,5/ 3-ST-3,81

Order No.: 1826982

The figure shows a 10-position version of the product

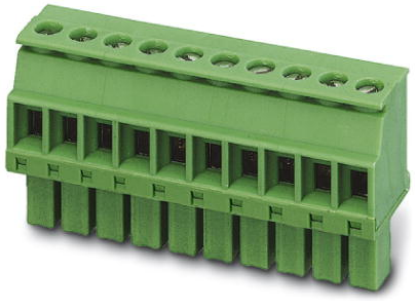

http://eshop.phoenixcontact.de/phoenix/treeViewClick.do?UID=1826982

Plug component, Nominal current: 8 A, Nom. voltage: 160 V, Pitch: 3.81 mm, Number of positions: 3, Connection type: Screw connection, Color: green

Commercial data	
EAN	4017918100032
Pack	50 pcs.
Customs tariff	85366990
Weight/Piece	0.00278 KG
Catalog page information	Page 145 (CC-2009)

Product notes

WEEE/RoHS-compliant since: 01/01/2003

http://www.download.phoenixcontact.com
Please note that the data given here has been taken from the online catalog. For comprehensive information and data, please refer to the user documentation. The General Terms and Conditions of Use apply to Internet downloads.

Technical data

Dimensions / positions

Height	12.5 mm
Pitch	3.81 mm
Dimension a	7.62 mm
Number of positions	3

Screw thread	M2
Tightening torque, min	0.22 Nm
Tightening torque max	0.25 Nm

Technical data

Insulating material group	I
Rated surge voltage (III/3)	2.5 kV
Rated surge voltage (III/2)	2.5 kV
Rated surge voltage (II/2)	2.5 kV
Rated voltage (III/2)	160 V
Rated voltage (II/2)	320 V
Connection in acc. with standard	EN-VDE
Nominal current I_N	8 A
Nominal voltage U_N	160 V
Nominal cross section	1.5 mm²
Maximum load current	8 A (with 1.5 mm^2 conductor cross section)
Insulating material	PA
Inflammability class acc. to UL 94	V0
Internal cylindrical gage	A1
Stripping length	7 mm

Connection data

Conductor cross section solid min.	0.14 mm²
Conductor cross section solid max.	1.5 mm²
Conductor cross section stranded min.	0.14 mm²
Conductor cross section stranded max.	1.5 mm²
Conductor cross section stranded, with ferrule without plastic sleeve min.	0.25 mm²
Conductor cross section stranded, with ferrule without plastic sleeve max.	1.5 mm²
Conductor cross section stranded, with ferrule with plastic sleeve min.	0.25 mm²
Conductor cross section stranded, with ferrule with plastic sleeve max.	0.5 mm²
Conductor cross section AWG/kcmil min.	28
Conductor cross section AWG/kcmil max	16
2 conductors with same cross section, solid min.	0.08 mm²
2 conductors with same cross section, solid max.	0.5 mm²

2 conductors with same cross section, stranded min.	0.08 mm²
2 conductors with same cross section, stranded max.	0.75 mm²
2 conductors with same cross section, stranded, ferrules without plastic sleeve, min.	0.25 mm²
2 conductors with same cross section, stranded, ferrules without plastic sleeve, max.	0.34 mm²
2 conductors with same cross section, stranded, TWIN ferrules with plastic sleeve, min.	0.5 mm²
2 conductors with same cross section, stranded, TWIN ferrules with plastic sleeve, max.	0.5 mm²

Certificates / Approvals

Certification	CB, CSA, CUL, GOST, UL, VDE-PZI

CSA

Nominal voltage U_N	300 V
Nominal current I_N	8 A
AWG/kcmil	28-16

CUL

Nominal voltage U_N	300 V
Nominal current I_N	8 A
AWG/kcmil	30-14

UL

Nominal voltage U_N	300 V
Nominal current I_N	8 A
AWG/kcmil	30-14

Accessories

Item	Designation	Description
Marking		
1051993	B-STIFT	Marker pen, for manual labeling of unprinted Zack strips, smear-proof and waterproof, line thickness 0.5 mm
0804109	SK 3,81/2,8:FORTL.ZAHLEN	Marker card, printed horizontally, self-adhesive, 10-section marker strip, 14 identical decades marked 1-10, 11-20 etc. up to 91-(99)100, sufficient for 140 terminal blocks
0805056	SK 3,81/2,8:SO	Marker card, special printing, self-adhesive, labeled acc. to customer requirements, 14 identical marker strips per card, max. 25-position labeling per strip, color: White
0803883	SK U/2,8 WH:UNBEDRUCKT	Unprinted marker cards, DIN A4 format, pitch as desired, self-adhesive, with 50 stamped marker strips, 185 mm strip length, can be labeled with the CMS system or manually with the M-PEN
Tools		
1205037	SZS 0,4X2,5	Screwdriver, bladed, matches all screw terminal blocks up to 1.5 mm² connection cross section, blade: 0.4 x 2.5 mm

Additional products

Item	Designation	Description
General		
1897814	EMC 1,5/ 3-G-3,81	Header, Nominal current: 8 A, Nom. voltage: 160 V, Pitch: 3.81 mm, Number of positions: 3, Color: green, Assembly: Press-in
1860650	EMCV 1,5/ 3-G-3,81	Header, Nominal current: 8 A, Nom. voltage: 160 V, Pitch: 3.81 mm, Number of positions: 3, Color: green, Assembly: Press-in
1857896	IMC 1,5/ 3-ST-3,81	Plug component, Nominal current: 8 A, Nom. voltage: 160 V, Pitch: 3.81 mm, Number of positions: 3, Connection type: Screw connection, Color: green
1803280	MC 1,5/ 3-G-3,81	Header, Nominal current: 8 A, Nom. voltage: 160 V, Pitch: 3.81 mm, Number of positions: 3, Color: green, Assembly: Soldering
1908774	MC 1,5/ 3-G-3,81 THT	Header, Nominal current: 8 A, Nom. voltage: 160 V, Pitch: 3.81 mm, Number of positions: 3, Color: black, Assembly: SMD/THT/ THR
1829963	MCD 1,5/ 3-G-3,81	Header, Nominal current: 8 A, Nom. voltage: 160 V, Pitch: 3.81 mm, Number of positions: 3, Color: green, Assembly: Soldering
1843088	MCD 1,5/ 3-G1-3,81	Header, Nominal current: 8 A, Nom. voltage: 160 V, Pitch: 3.81 mm, Number of positions: 3, Color: green, Assembly: Soldering
1830415	MCDV 1,5/ 3-G-3,81	Header, Nominal current: 8 A, Nom. voltage: 160 V, Pitch: 3.81 mm, Number of positions: 3, Color: green, Assembly: Soldering

1847738	MCDV 1,5/ 3-G1-3,81	Header, Nominal current: 8 A, Nom. voltage: 160 V, Pitch: 3.81 mm, Number of positions: 3, Color: green, Assembly: Soldering
1861730	MCO 1,5/ 3-GL-3,81	Header, Nominal current: 8 A, Nom. voltage: 125 V, Pitch: 3.81 mm, Number of positions: 3, Color: green, Assembly: Soldering
1861659	MCO 1,5/ 3-GR-3,81	Header, Nominal current: 8 A, Nom. voltage: 125 V, Pitch: 3.81 mm, Number of positions: 3, Color: green, Assembly: Soldering
1803439	MCV 1,5/ 3-G-3,81	Header, Nominal current: 8 A, Nom. voltage: 160 V, Pitch: 3.81 mm, Number of positions: 3, Color: green, Assembly: Soldering
1832701	MCVDU 1,5/ 3-G-3,81	Header, Nominal current: 8 A, Nom. voltage: 160 V, Pitch: 3.81 mm, Number of positions: 3, Color: green, Assembly: Soldering
1832743	MCVK 1,5/ 3-G-3,81	Plug component, Nominal current: 8 A, Nom. voltage: 160 V, Pitch: 3.81 mm, Number of positions: 3, Assembly: DIN rail, Color: green
1827282	SMC 1,5/ 3-G-3,81	Header, Nominal current: 8 A, Nom. voltage: 160 V, Pitch: 3.81 mm, Number of positions: 3, Color: green, Assembly: Soldering

Diagrams/Drawings

Dimensioned drawing

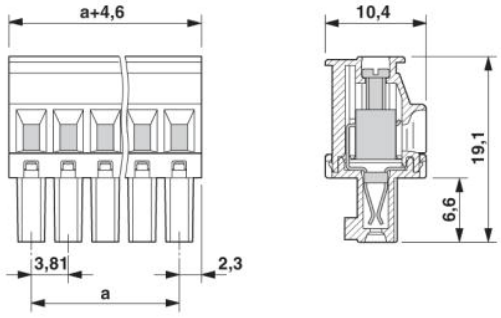

Address

PHOENIX CONTACT Inc., USA
586 Fulling Mill Road
Middletown, PA 17057,USA
Phone (800) 888-7388
Fax (717) 944-1625
http://www.phoenixcon.com

© 2010 Phoenix Contact
Technical modifications reserved;