THIS DRAWING IS UNPUBLISHED. RELEASED FOR PUBLICATION 20
© COPYRIGHT 20 BY TYCO ELECTRONICS CORPORATION. ALL RIGHTS RESERVED.

SET UP GAUGE 2119599-2 | LOC A | DIST 66

REVISIONS

P	LTR	DESCRIPTION	DATE	DWN	APVD
	A	RELEASED	16APR2015	YY	TE

ATLANTIC VERSION TERMINATOR INTERFACE ADAPTER	PART NUMBER	REVISION	DESCRIPTION	FEED TYPE
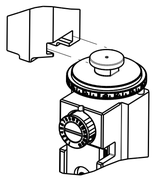	2150012-1	A	FINE CRIMP HEIGHT ADJUST	MECHANICAL
	2150012-2	A	FINE CRIMP HEIGHT ADJUST	PNEUMATIC
	2150012-5	A	FINE CRIMP HEIGHT ADJUST	SERVO LATCH PLATE 4
	2150012-6	A	NON-CRIMP HEIGHT ADJUST	4 SERVO LATCH PLATE 12
	2150012-7	A	FINE CRIMP HEIGHT ADJUST	NONE
	7-2150012-7	A	CRIMP TOOLING KIT	-

APPLICATOR STYLE CONVERSION CHART

CONVERT TO	PART NUMBERS REQUIRED					
PNEUMATIC FEED	2119950-1	2119792-4	-	2119641-1	-	2063440-1
SERVO LATCH PLATE	2119951-1	1901697-1	8-2150012-5	-	-	2168400-7 (QUANTITY 2)
SMART APPLICATOR	2161326-1	-	8-2150012-4	-	-	-
MECHANICAL FEED	2119949-1	2063961-4	5-18022-5	2119653-1	-	-
SERVO LATCH PLATE	2119951-1	1901697-1	8-2150012-5	-	-	2168400-7 (QUANTITY 2)
SMART APPLICATOR	2161326-1	-	8-2150012-4	-	-	-
MECHANICAL FEED	2119949-1	2063961-4	5-18022-5	2119653-1	-	-
PNEUMATIC FEED	2119950-1	2119792-4	-	2119641-1	-	2063440-1
-	-	-	-	-	-	-
-	-	-	-	-	-	-
-	-	-	-	-	-	-
-	-	-	-	-	-	-

APPLICATOR DATA		
CRIMP	SIZE	TYPE
WIRE	2.79 mm [.110]	F
INSUL	4.57 mm [.180]	F
APPL INSTRUCTIONS 408-10390		

TERMINAL DATA: TE TERMINAL		TE CRIMP SPECIFICATION
TERMINAL NAME: SHUR PLUG		
WIRE STRIP LENGTH 3.90-4.70 mm [.154-.185 IN]		INSULATION DIAMETER RANGE ∅2.54-3.68 mm [.100-.145 IN]
TERMINAL APPLICATION SPECIFICATION	114-5208	- -
	-	- -

TERMINALS APPLIED

TE TERMINAL	TE TERMINAL	TE TERMINAL	TE TERMINAL
170002-3	170002-4	170002-5	170002-8
170002-9	3-170002-3	3-170002-4	6-170002-4
8-170002-4			

WIRE SIZE	CRIMP HEIGHT mm [INCH]	CRIMP HEIGHT REFERENCE SETTING 9
2.00mm2	1.88+/-0.05 [.074+/-.002]	3.9
1.25mm2	1.73+/-0.05 [.068+/-.002]	5.4
0.75mm2	1.63+/-0.05 [.064+/-.002]	6.6
0.50mm2	1.50+/-0.05 [.059+/-.002]	7.9

1 RECOMMENDED SPARE PARTS

2 GREASE BEARING SURFACES LIGHTLY

3. LUBRICATE DAILY PER THE APPLICATOR INSTRUCTION SHEET SUPPLIED WITH THE APPLICATOR.

4 APPLICATOR SPECIFIC DATA TO BE ENTERED INTO BLANK MEMORY CHIP AT ASSEMBLY. SEE BELOW FOR PART NUMBER:
MECHANICAL FEED WITH "SMART APPLICATOR" CONVERSION: 8-2150012-4
PNEUMATIC FEED WITH "SMART APPLICATOR" CONVERSION: 8-2150012-4
SERVO FEED WITH "FINE CRIMP HEIGHT ADJUST": 8-2150012-5
SERVO FEED WITH "NON-CRIMP HEIGHT ADJUST": 8-2150012-6

5. ADJUSTMENT OF THE STRIPPER MAY BE REQUIRED WHEN MOVING THE APPLICATOR BETWEEN BENCH AND LEADMAKER APPLICATIONS.

6 APPLY PART NUMBER 1-23419-5 LOCTITE TO THREADS OF ITEM 62 & 180.
APPLY PART NUMBER 2-23419-6 LOCTITE TO THREADS OF ITEM 242.
FOR -6 ONLY APPLY PART NUMBER 1-23419-5 LOCTITE TO THREADS OF ITEM 37 & 180.

7 GREASE THREADS, GROOVE AND O-RING ON ITEMS 35 & 252.

8 MAGNET, ITEM 166 MUST BE ORIENTED CORRECTLY IN ORDER TO PROPERLY ACTUATE THE COUNTER.

9 CRIMP HEIGHT REFERENCE SETTING WAS THE SETTING USED WHEN THE APPLICATOR WAS QUALIFIED AT THE FACTORY. ADJUSTMENT MAY BE NECESSARY WHEN RUNNING APPLICATOR IN THE FIELD.

10 SPARE FEED CAM STORAGE LOCATION REFER TO INSTRUCTION SHEET FOR ADDITIONAL INFORMATION.

11 THE RECOMMENDED SET-UP FOR END FEED APPLICATORS IS POST-FEED WITH ITEM 2119653-1. THE APPLICATOR CAN BE CONFIGURED FOR PRE-FEED WITH ITEM 2119652-1 BUT MAY ENCOUNTER PROBLEMS WITH SOME APPLICATIONS. FEED ISSUES OR TERMINAL JAMMING MAY OCCUR IN THE PRE-FEED CONFIGURATION.

12 WHEN ASSEMBLING -6 NON-CRIMP HEIGHT ADJUST APPLICATOR USE SHIM PACK 2119957-2 TO ALIGN APPLICATOR'S MAXIMUM WIRE CRIMP HEIGHT AT NORMAL TERMINATOR SHUT HEIGHT

13 POSTION ITEM 51 & 58 TO FEED TERMINAL FROM END OF RECEPTACLE.

*WARNING
ON INSTALLATION, SET WIRE DISC, ITEM 40 TO LARGEST WIRE SIZE SETTING. USE OF SETTINGS BELOW MINIMUM REQUIRED CRIMP HEIGHT SETTING WILL CAUSE DAMAGE TO CRIMP TOOLING.

-77	-7	-6	-5	-2	-1	PART NO	DESCRIPTION	ITEM NO
-	-	1	-	-	-	2119957-2	APPLICATOR SHIM PACK	260
-	1	-	1	1	1	8-21084-0	O-RING, .676 ID, .070 DIA. MAT.	252
-	-	-	-	1	-	2119640-1	PUSH ROD, AIR FEED	250
-	-	-	-	1	-	2079988-1	BUSHING, LCH5-12, MISUMI	249
-	-	-	-	1	-	2119641-1	FEED CAM, AIR FEED	248
-	1	-	1	1	1	2119798-1	DETENT PIN	247
-	1	-	1	1	1	1-22279-3	SPRING, COMPRESSION	246
-	-	1	-	-	-	2119759-1	RAM, AMP STYLE, END FEED, NON-ADJUST	245
-77	-7	-6	-5	-2	-1	PART NO	DESCRIPTION	ITEM NO
-	1	1	1	1	1	2119082-3	CAM, SNAIL, INSULATION ADJUSTMENT	244
-	1	1	1	1	1	2079764-1	WASHER, WAVE SPRING, CREST-TO-CREST	243
-	1	1	1	1	1	2119083-1	RETAINER, INSULATION DIAL 6	242
-	-	2	2	-	-	2168400-7	SHCS, LOW HEAD, RoHS, M5 X 10	240
-	-	-	-	-	1	2119580-1	MECHANICAL FEED ASSEMBLY	239
-	-	-	-	1	-	2063440-1	AIR FEED MODULE	238
-	-	1	1	-	-	2119740-2	TAG,IDENTIFICATION	213
-	-	REF	REF	-	-	1901697-1	FEED FINGER ASSEMBLY,EF	183
-	1	1	1	1	1	1-1976055-5	STANDOFF, HOLD-DOWN 6	180
-	1	1	1	1	1	6-993111-6	PIN, SLOTTED SPRING 3.0 X 14.0	177
-	1	1	1	1	1	8-22280-7	SPRING, COMPRESSION	176
-	1	1	1	1	1	1752353-2	GUIDE PIN,HOLDDOWN	175
-	1	1	1	1	1	1901680-2	GUIDE PIN,HOLDDOWN	174
-	-	-	-	2	-	21045-3	RING, RETAIN, EXTERN, 3/16 CRESCENT	172
-	1	1	1	1	1	994969-1	MAGNET, RARE EARTH HIGH ENERGY	166
-	REF	REF	REF	REF	REF	994970-2	COUNTER, MAGNETIC	164
-	-	-	-	1	-	240638-1	SPRING, FEED FINGER	163
-	-	-	-	1	-	3-23627-7	PIN, RETAIN, GRVD, 3/16 X .854	137
-	-	REF	REF	-	-	SEE NOTE 4	MEMORY CHIP, PROGRAMMED	135
-	-	1	1	-	-	1633743-1	SERVO FEED LATCH ASM	133
-	1	1	1	1	1	455888-4	SPACER, CRIMPER	82
-	1	1	1	1	1	2119956-2	DOCUMENTATION PACKAGE	71
-	2	2	2	2	2	2-18032-2	SCR, SET, FLT POINT M3 X 10.0	70
-	1	-	-	1	1	2119740-1	TAG,IDENTIFICATION	67
-	2	2	2	2	2	2168078-1	SCREW, DRIVE, RH, RoHS, 2 x .188	66
-	1	1	1	1	1	1901681-5	HOLDDOWN, TERMINAL	65
-	2	2	2	2	2	2168400-8	SHCS, LOW HEAD, RoHS, M4 X 16	64
-	1	-	1	1	1	2119793-1	LIMITER, ADJUSTMENT BOLT	63
6 -	3	-	3	3	3	992763-5	SCR, SET, SOC, CONE POINT, M3 x 4.0	62
-	1	1	1	1	1	2079383-4	SCR, BHSC, RoHS (M4 X 8)	60
-	-	-	-	-	1	5-18022-5	SCR, HEX HD CAP, M4 X 6.0	59
3 -	-	-	-	-	1	2063961-4	FEED FINGER	58
-	3	3	3	3	3	2168400-4	SHCS, LOW HEAD, RoHS, M4 X 8	57
-	2	2	2	2	2	2168083-2	SCR, SKT HD CAP, RoHS, M4 X 8.0	56
-	2	2	2	2	2	5018030-2	NUT, HEX, REG, RoHS, M4	55
-	2	2	2	2	2	5018030-1	NUT, HEX, REG, RoHS, M3	54
-	2	2	2	2	2	986965-8	NUT, LOCK, HEX, TORQUE (M4)	53
-	1	1	1	1	1	1-5018030-0	NUT, HEX, REG, RoHS, M3.5	52
3 -	-	-	-	1	-	2119792-4	PAWL, EF, AIR	51
-	-	-	-	1	2	18023-9	SCR, SKT HD CAP M4 X 6.0	49
-	-	-	-	-	1	2119652-1	FEED CAM, PRE FEED	48
-	-	-	-	-	1	2119653-1	FEED CAM, POST FEED	47
-	1	1	1	1	1	2119655-5	APPLICATOR BASIC ASSEMBLY, EF	46
-	1	-	1	1	1	2119369-1	RAM,AMP STYLE, END FEED	44
-	1	1	1	1	1	2079383-7	SCR, BHSC, RoHS (M8 X 25)	41
-	1	-	1	1	1	2119645-1	DISC, NUMBERED FA WIRE ADJUSTMENT	40
-	1	-	1	1	1	2119957-1	APPLICATOR SHIM PACK	39
-	1	1	1	1	1	1-2119644-2	RAM WASHER, PRECISION	38
6 -	1	1	1	1	1	2119085-1	FA HEAD, ATLANTIC STYLE	37
-	1	-	1	1	1	2119092-1	BOLT, ADJUSTMENT	35
-	7	7	7	7	7	1-18028-2	WASHER, FLAT, REG M4	33
-	2	2	2	2	2	2168083-9	SCR, SKT HD CAP, RoHS, M4 X 20	31
-	2	2	2	2	2	1-2168083-0	SCR, SKT HD CAP, RoHS, M4 X 10	29
-	1	1	1	1	1	240639-1	STRIPPER (MACHINING)	27
-	2	2	2	2	2	1320906-1	STUD, THREADED	25
-	1	1	1	1	1	1752371-5	PLATE, STRIP GUIDE	24
-	1	1	1	1	1	240825-8	PLATE, STRIP HOLD DOWN	23
-	2	2	2	2	2	2-22281-3	SPRING, COMPRESSION	22
-	1	1	1	1	1	1752373-4	DRAG	20
-	2	2	2	2	2	1901259-4	GUIDE, LOWER STRIP	18
-	4	4	4	4	4	1-2079383-1	SCR, BHSC, RoHS (M6 X 12)	17
-	1	1	1	1	1	240641-2	SPACER	16
-	1	1	1	1	1	1752360-1	SPACER,HOLD-DOWN	13
1 -	1	1	1	1	1	240644-1	PLATE, REAR SHEAR	11
-	-	-	-	-	-	-	-	10
1 -	1	1	1	1	1	690496-4	PLATE, FRONT SHEAR	9
1 1	1	1	1	1	1	1803001-4	ANVIL, COMBINATION, END FEED	8
1 -	1	1	1	1	1	2-690474-8	BLADE, SLUG	7
-	1	1	1	1	1	4-240641-0	SPACER	5
-	1	1	1	1	1	238009-1	BLOCK, FL CRIMPER SPACER	4
1 1	1	1	1	1	1	2119582-3	CRIMPER, INSULATION F PREMIUM	3
-	1	1	1	1	1	1-455888-3	SPACER, CRIMPER	2
1 1	1	1	1	1	1	456408-2	CRIMPER, WIRE PREMIUM	1

ATLANTIC VERSION
Shown on sheets 1 of 4 & 2 of 4
(Pacific version shown on sheets 3 of 4 & 4 of 4)

THIS DRAWING IS A CONTROLLED DOCUMENT FOR TYCO ELECTRONICS CORPORATION IT IS SUBJECT TO CHANGE AND THE CONTROLLING ENGINEERING ORGANIZATION SHOULD BE CONTACTED FOR THE LATEST REVISION.

DIMENSIONS: mm
TOLERANCES UNLESS OTHERWISE SPECIFIED:
0 PLC ±-
1 PLC ±0.5
2 PLC ±0.13
3 PLC ±0.013
4 PLC ±0.0001
ANGLES ±
MATERIAL - -
FINISH - -

DWN X ZHAO 03JUN2012
CHK T ELBIN 03JUN2012
APVD S XI 03JUN2012

TE Connectivity
Harrisburg, PA 17105-3608

NAME Ocean End Feed Applicator -
PRODUCT SPEC -
APPLICATION SPEC -
WEIGHT -

SIZE	CAGE CODE	DRAWING NO	RESTRICTED TO
A1	00779	C-2150012	-

Customer Accessible Production Drawing | SCALE 1:1 | SHEET 1 OF 4 | REV A

SHEETS 3 & 4 ARE NOT REQUIRED FOR ATLANTIC VERSION

THIS DRAWING IS UNPUBLISHED. RELEASED FOR PUBLICATION 20
© COPYRIGHT 20 BY TYCO ELECTRONICS CORPORATION. ALL RIGHTS RESERVED.

LOC	DIST
A	66

REVISIONS

P	LTR	DESCRIPTION	DATE	DWN	APVD
	-	SEE SHEET 1	-	-	-

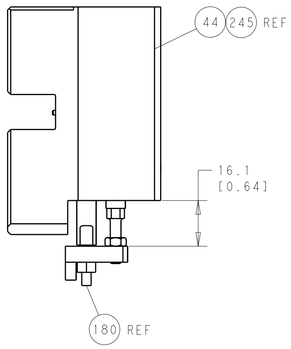

HOLDDOWN SET-UP

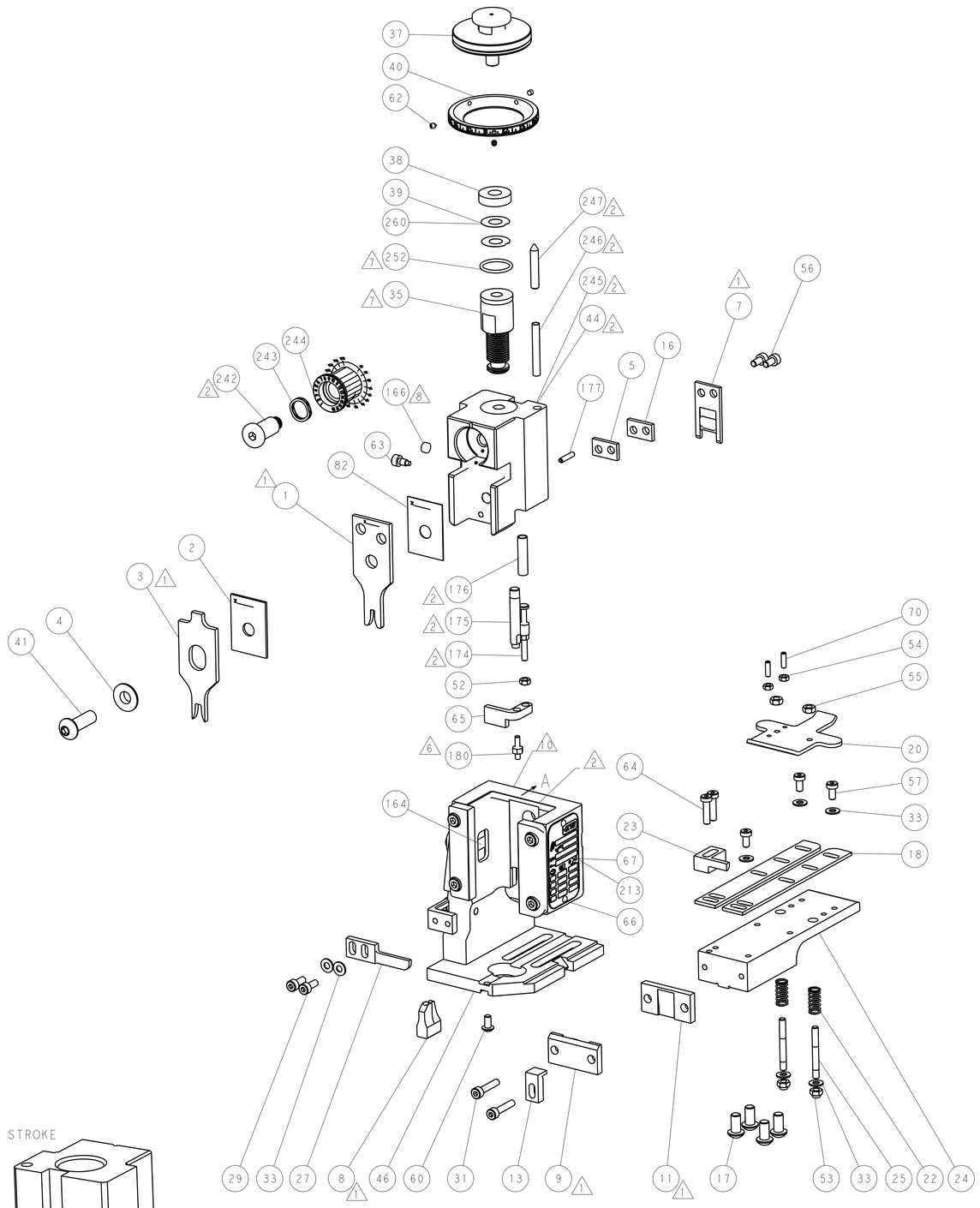

FEED TYPE

MECHANICAL

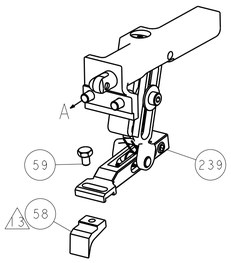

PNEUMATIC

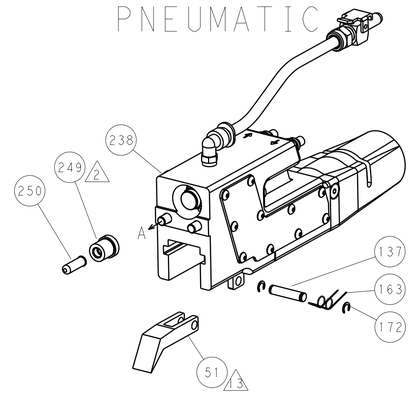

SERVO

LATCH PLATE

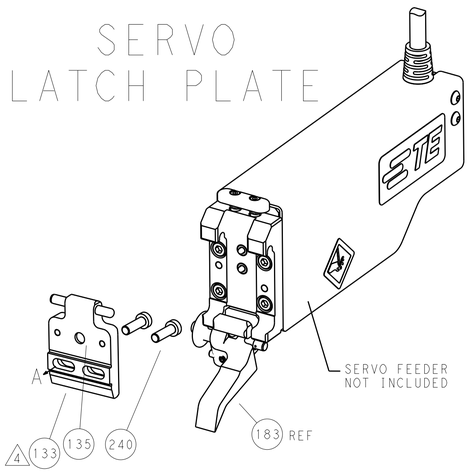

CAM POSITIONS

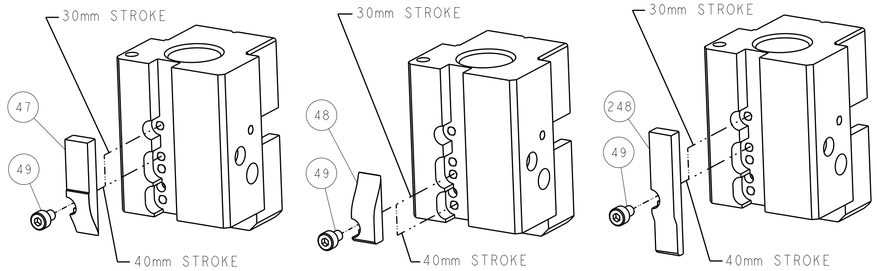

ATLANTIC VERSION

Shown on sheets 1 of 4 & 2 of 4

(Pacific version shown on sheets 3 of 4 & 4 of 4)

THIS DRAWING IS A CONTROLLED DOCUMENT FOR TYCO ELECTRONICS CORPORATION IT IS SUBJECT TO CHANGE AND THE CONTROLLING ENGINEERING ORGANIZATION SHOULD BE CONTACTED FOR THE LATEST REVISION.

DIMENSIONS: mm

TOLERANCES UNLESS OTHERWISE SPECIFIED:

0 PLC	± -
1 PLC	±0.5
2 PLC	±0.13
3 PLC	±0.013
4 PLC	±0.0001
ANGLES	± -

MATERIAL -

FINISH -

DWN	X ZHAO	03JUN2012
CHK	T ELBIN	03JUN2012
APVD	S XI	03JUN2012
PRODUCT SPEC	-	
APPLICATION SPEC	-	
WEIGHT	-	

TE Connectivity
Harrisburg, PA 17105-3608

NAME: Ocean End Feed Applicator -

SIZE	CAGE CODE	DRAWING NO	RESTRICTED TO
A1	00779	C-2150012	-

Customer Accessible Production Drawing | SCALE 1:1 | SHEET 2 OF 4 | REV A

SHEETS 3 & 4 ARE NOT REQUIRED FOR ATLANTIC VERSION

THIS DRAWING IS UNPUBLISHED. RELEASED FOR PUBLICATION 20
© COPYRIGHT 20 BY TYCO ELECTRONICS CORPORATION. ALL RIGHTS RESERVED.

SET UP GAUGE 2119599-2 | LOC A | DIST 66

REVISIONS

P	LTR	DESCRIPTION	DATE	DWN	APVD
	-	SEE SHEET 1	-	-	-

PACIFIC VERSION TERMINATOR INTERFACE ADAPTER	PART NUMBER	REVISION	DESCRIPTION	FEED TYPE
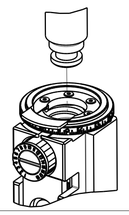	2-2150012-1	A	FINE CRIMP HEIGHT ADJUST	MECHANICAL
	2-2150012-2	A	FINE CRIMP HEIGHT ADJUST	PNEUMATIC
	2-2150012-5	A	FINE CRIMP HEIGHT ADJUST	SERVO LATCH PLATE 4
	2-2150012-7	A	FINE CRIMP HEIGHT ADJUST	NONE
	7-2150012-7	A	CRIMP TOOLING KIT	-

APPLICATOR STYLE CONVERSION CHART

CONVERT TO	PART NUMBERS REQUIRED					
PNEUMATIC FEED	2119950-1	2119792-4	-	2119641-2	-	2063440-1
SERVO LATCH PLATE	2119951-1	1901697-1	8-2150012-5	-	-	2168400-7 (QUANTITY 2)
SMART APPLICATOR	2161326-1	-	8-2150012-4	-	-	-
MECHANICAL FEED	2119949-1	2063961-4	5-18022-5	2119653-2	-	-
SERVO LATCH PLATE	2119951-1	1901697-1	8-2150012-5	-	-	2168400-7 (QUANTITY 2)
SMART APPLICATOR	2161326-1	-	8-2150012-4	-	-	-
MECHANICAL FEED	2119949-1	2063961-4	5-18022-5	2119653-2	-	-
PNEUMATIC FEED	2119950-1	2119792-4	-	2119641-2	-	2063440-1
-	-	-	-	-	-	-
-	-	-	-	-	-	-

APPLICATOR DATA

CRIMP	SIZE	TYPE
WIRE	2.79 mm [.110]	F
INSUL	4.57 mm [.180]	F

APPL INSTRUCTIONS 408-10390

TERMINAL DATA: TE TERMINAL — TE CRIMP SPECIFICATION

TERMINAL NAME: SHUR PLUG

WIRE STRIP LENGTH	INSULATION DIAMETER RANGE	
3.90-4.70 mm [.154-.185 IN]	∅2.54-3.68 mm [.100-.145 IN]	
TERMINAL APPLICATION SPECIFICATION	114-5208	-	-
	-	-	-

TERMINALS APPLIED

TE TERMINAL	TE TERMINAL	TE TERMINAL	TE TERMINAL
170002-3	170002-4	170002-5	170002-8
170002-9	3-170002-3	3-170002-4	6-170002-4
8-170002-4			

WIRE SIZE	CRIMP HEIGHT mm [INCH]	CRIMP HEIGHT REFERENCE SETTING 9
2.00mm2	1.88+/-0.05 [.074+/-.002]	3.9
1.25mm2	1.73+/-0.05 [.068+/-.002]	5.4
0.75mm2	1.63+/-0.05 [.064+/-.002]	6.6
0.50mm2	1.50+/-0.05 [.059+/-.002]	7.9

1. RECOMMENDED SPARE PARTS
2. GREASE BEARING SURFACES LIGHTLY
3. LUBRICATE DAILY PER THE APPLICATOR INSTRUCTION SHEET SUPPLIED WITH THE APPLICATOR.
4. APPLICATOR SPECIFIC DATA TO BE ENTERED INTO BLANK MEMORY CHIP AT ASSEMBLY. SEE BELOW FOR PART NUMBER:
   MECHANICAL FEED WITH "SMART APPLICATOR" CONVERSION: 8-2150012-4
   PNEUMATIC FEED WITH "SMART APPLICATOR" CONVERSION: 8-2150012-4
   SERVO FEED WITH "FINE CRIMP HEIGHT ADJUST": 8-2150012-5
5. ADJUSTMENT OF THE STRIPPER MAY BE REQUIRED WHEN MOVING THE APPLICATOR BETWEEN BENCH AND LEADMAKER APPLICATIONS.
6. APPLY PART NUMBER 1-23419-5 LOCTITE TO THREADS OF ITEM 62 & 180. APPLY PART NUMBER 2-23419-6 LOCTITE TO THREADS OF ITEM 242.
7. GREASE THREADS, GROOVE AND O-RING ON ITEMS 139 & 153.
8. MAGNET, ITEM 166 MUST BE ORIENTED CORRECTLY IN ORDER TO PROPERLY ACTUATE THE COUNTER.
9. CRIMP HEIGHT REFERENCE SETTING WAS THE SETTING USED WHEN THE APPLICATOR WAS QUALIFIED AT THE FACTORY. ADJUSTMENT MAY BE NECESSARY WHEN RUNNING APPLICATOR IN THE FIELD.
10. SPARE FEED CAM STORAGE LOCATION REFER TO INSTRUCTION SHEET FOR ADDITIONAL INFORMATION.
11. THE RECOMMENDED SET-UP FOR END FEED APPLICATORS IS POST-FEED WITH ITEM 2119653-1. THE APPLICATOR CAN BE CONFIGURED FOR PRE-FEED WITH ITEM 2119652-1 BUT MAY ENCOUNTER PROBLEMS WITH SOME APPLICATIONS. FEED ISSUES OR TERMINAL JAMMING MAY OCCUR IN THE PRE-FEED CONFIGURATION.
12. POSTION ITEM 51 & 58 TO FEED TERMINAL FROM END OF RECEPTACLE.

*WARNING
ON INSTALLATION, SET WIRE DISC, ITEM 40 TO LARGEST WIRE SIZE SETTING. USE OF SETTINGS BELOW MINIMUM REQUIRED CRIMP HEIGHT SETTING WILL CAUSE DAMAGE TO CRIMP TOOLING.

-	1	1	1	1	2119782-1	FINE ADJUST HEAD ASM, PACIFIC STYLE	251
-	-	-	1	-	2119640-1	PUSH ROD, AIR FEED	250
-	-	-	1	-	2079988-1	BUSHING, LCH5-12, MISUMI	249
-	1	1	1	1	1-22279-3	SPRING, COMPRESSION	246
-	1	1	1	1	2119082-3	CAM, SNAIL, INSULATION ADJUSTMENT	244
-	1	1	1	1	2079764-1	WASHER, WAVE SPRING, CREST-TO-CREST	243
-77-27-	25-	22-	21		PART NO	DESCRIPTION	ITEM NO

PACIFIC VERSION
Shown on sheets 3 of 4 & 4 of 4
(Atlantic version shown on sheets 1 of 4 & 2 of 4)

6 -	1	1	1	1	2119083-1	RETAINER, INSULATION DIAL	242
-	-	2	-	-	2168400-7	SHCS, LOW HEAD, RoHS, M5 X 10	240
-	-	-	-	1	2119580-1	MECHANICAL FEED ASSEMBLY	239
-	-	-	1	-	2063440-1	AIR FEED MODULE	238
-	-	1	-	-	2119740-2	TAG,IDENTIFICATION	213
-	4	4	4	4	2079383-9	SCR, BHSC, RoHS (M6 X 20)	186
-	-	REF	-	-	1901697-1	FEED FINGER ASSEMBLY,EF	183
6 -	1	1	1	1	1-1976055-5	STANDOFF, HOLD-DOWN	180
-	1	1	1	1	6-993111-6	PIN, SLOTTED SPRING 3.0 X 14.0	177
-	1	1	1	1	8-22280-7	SPRING, COMPRESSION	176
-	1	1	1	1	1752353-2	GUIDE PIN,HOLDDOWN	175
-	1	1	1	1	1901680-2	GUIDE PIN,HOLDDOWN	174
-	-	-	2	-	21045-3	RING, RETAIN, EXTERN, 3/16 CRESCENT	172
-	1	1	1	1	994969-1	MAGNET, RARE EARTH HIGH ENERGY	166
-	REF	REF	REF	REF	994970-2	COUNTER, MAGNETIC	164
-	-	-	1	-	240638-1	SPRING, FEED FINGER	163
-	1	1	1	1	8-21084-1	O-RING, .801 ID, .070 DIA. MAT.	153
-	-	-	1	-	2119641-2	FEED CAM, AIR FEED	152
-	1	1	1	1	2119798-2	DETENT PIN	145
-	1	1	1	1	2079383-8	SCR, BHSC, RoHS (M4 X 16)	144
-	-	-	-	1	2119653-2	FEED CAM, POST FEED	142
-	1	1	1	1	2119655-6	APPLICATOR BASIC ASSEMBLY, EF	141
-	1	1	1	1	2119651-1	RAM, ASIAN STYLE, END FEED	140
-	1	1	1	1	2119092-2	BOLT, ADJUSTMENT	139
-	-	-	1	-	3-23627-7	PIN, RETAIN, GRVD, 3/16 X .854	137
-	-	REF	-	-	SEE NOTE 4	MEMORY CHIP, PROGRAMMED	135
-	-	1	-	-	1633743-1	SERVO FEED LATCH ASM	133
-	1	1	1	1	455888-4	SPACER, CRIMPER	82
-	1	1	1	1	2119956-2	DOCUMENTATION PACKAGE	71
-	2	2	2	2	2-18032-2	SCR, SET, FLT POINT M3 X 10.0	70
-	1	-	1	1	2119740-1	TAG,IDENTIFICATION	67
-	2	2	2	2	2168078-1	SCREW, DRIVE, RH, RoHS, 2 x .188	66
-	1	1	1	1	1901681-5	HOLDDOWN, TERMINAL	65
-	2	2	2	2	2168400-8	SHCS, LOW HEAD, RoHS, M4 X 16	64
-	1	1	1	1	2119793-1	LIMITER, ADJUSTMENT BOLT	63
6 -	3	3	3	3	992763-5	SCR, SET, SOC, CONE POINT, M3 x 4.0	62
-	-	-	-	1	5-18022-5	SCR, HEX HD CAP, M4 X 6.0	59
12 -	-	-	-	1	2063961-4	FEED FINGER	58
-	3	3	3	3	2168400-4	SHCS, LOW HEAD, RoHS, M4 X 8	57
-	2	2	2	2	2168083-2	SCR, SKT HD CAP, RoHS, M4 X 8.0	56
-	2	2	2	2	5018030-2	NUT, HEX, REG, RoHS, M4	55
-	2	2	2	2	5018030-1	NUT, HEX, REG, RoHS, M3	54
-	2	2	2	2	986965-8	NUT, LOCK, HEX, TORQUE (M4)	53
-	1	1	1	1	1-5018030-0	NUT, HEX, REG, RoHS, M3.5	52
12 -	-	-	1	-	2119792-4	PAWL, EF, AIR	51
-	-	-	1	2	18023-9	SCR, SKT HD CAP M4 X 6.0	49
-	-	-	-	1	2119652-1	FEED CAM, PRE FEED	48
-	1	1	1	1	2079383-7	SCR, BHSC, RoHS (M8 X 25)	41
-	1	1	1	1	2119645-1	DISC, NUMBERED FA WIRE ADJUSTMENT	40
-	1	1	1	1	2119957-1	APPLICATOR SHIM PACK	39
-	1	1	1	1	1-2119644-2	RAM WASHER, PRECISION	38
-	7	7	7	7	1-18028-2	WASHER, FLAT, REG M4	33
-	2	2	2	2	2168083-9	SCR, SKT HD CAP, RoHS, M4 X 20	31
-	2	2	2	2	1-2168083-0	SCR, SKT HD CAP, RoHS, M4 X 10	29
-	1	1	1	1	240639-1	STRIPPER (MACHINING)	27
-	2	2	2	2	1320906-1	STUD, THREADED	25
-	1	1	1	1	1752371-5	PLATE, STRIP GUIDE	24
-	1	1	1	1	240825-8	PLATE, STRIP HOLD DOWN	23
-	2	2	2	2	2-22281-3	SPRING, COMPRESSION	22
-	1	1	1	1	1752373-4	DRAG	20
-	2	2	2	2	1901259-4	GUIDE, LOWER STRIP	18
-	1	1	1	1	240641-2	SPACER	16
-	1	1	1	1	1752360-1	SPACER,HOLD-DOWN	13
1 -	1	1	1	1	240644-1	PLATE, REAR SHEAR	11
-	-	-	-	-	-	-	10
1 -	1	1	1	1	690496-4	PLATE, FRONT SHEAR	9
1 1	1	1	1	1	1803001-4	ANVIL, COMBINATION, END FEED	8
1 -	1	1	1	1	2-690474-8	BLADE, SLUG	7
-	1	1	1	1	4-240641-0	SPACER	5
-	1	1	1	1	238009-1	BLOCK, FL CRIMPER SPACER	4
1 1	1	1	1	1	2119582-3	CRIMPER, INSULATION F PREMIUM	3
-	1	1	1	1	1-455888-3	SPACER, CRIMPER	2
1 1	1	1	1	1	456408-2	CRIMPER, WIRE PREMIUM	1
-77-27-	25-	22-	21		PART NO	DESCRIPTION	ITEM NO

THIS DRAWING IS A CONTROLLED DOCUMENT OF TYCO ELECTRONICS CORPORATION. IT IS SUBJECT TO CHANGE AND THE CONTROLLING ENGINEERING ORGANIZATION SHOULD BE CONTACTED FOR THE LATEST REVISION.

DWN X.ZHAO 03JUN2012
CHK T.ELBIN 03JUN2012
APVD S.XI 03JUN2012
PRODUCT SPEC -
APPLICATION SPEC -
WEIGHT -

DIMENSIONS: mm
TOLERANCES UNLESS OTHERWISE SPECIFIED:
0 PLC ±-
1 PLC ±0.5
2 PLC ±0.13
3 PLC ±0.013
4 PLC ±0.0001
ANGLES ±-
MATERIAL - -
FINISH - -

TE Connectivity
Harrisburg, PA 17105-3608

NAME Ocean End Feed Applicator -

SIZE	CAGE CODE	DRAWING NO	RESTRICTED TO
A1	00779	C-2150012	-

Customer Accessible Production Drawing | SCALE - 1:1 | SHEET 3 OF 4 | REV A

SHEETS 1 & 2 ARE NOT REQUIRED FOR PACIFIC VERSION

THIS DRAWING IS UNPUBLISHED. RELEASED FOR PUBLICATION 20
© COPYRIGHT 20 BY TYCO ELECTRONICS CORPORATION. ALL RIGHTS RESERVED.

LOC	DIST
A	66

REVISIONS

P	LTR	DESCRIPTION	DATE	DWN	APVD
	-	SEE SHEET 1	-	-	-

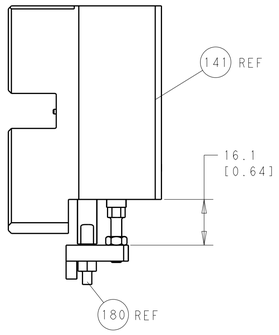

HOLDDOWN SET-UP

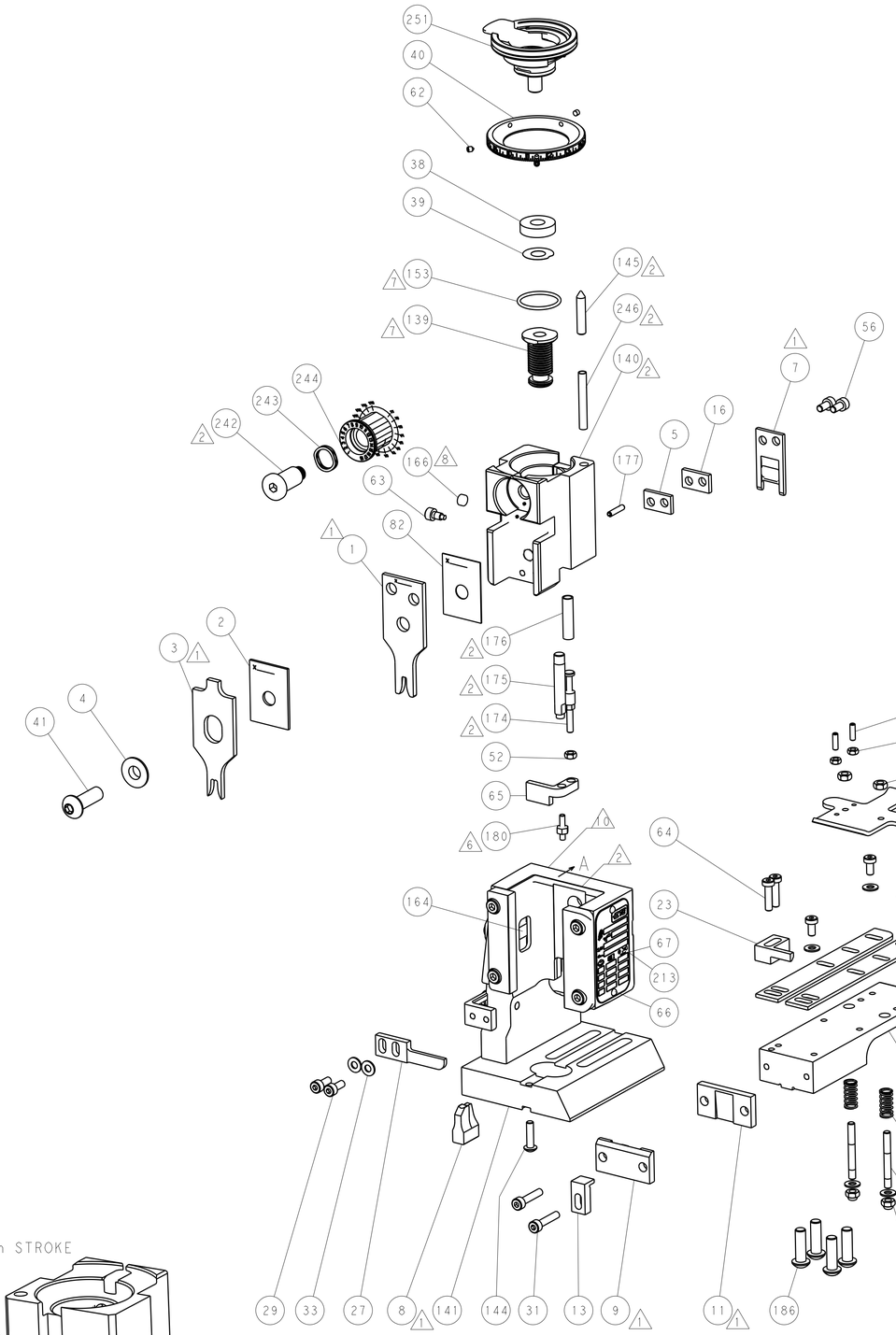

FEED TYPE

MECHANICAL

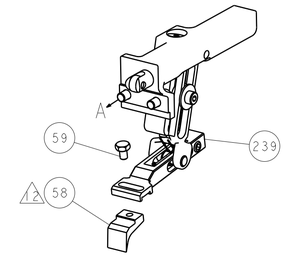

PNEUMATIC

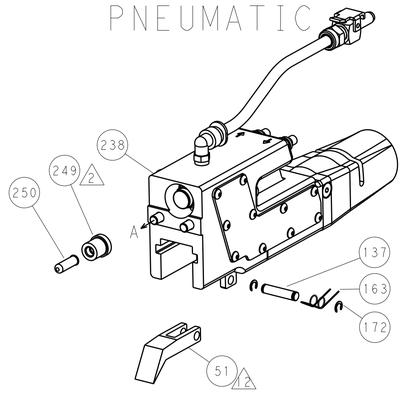

SERVO
LATCH PLATE

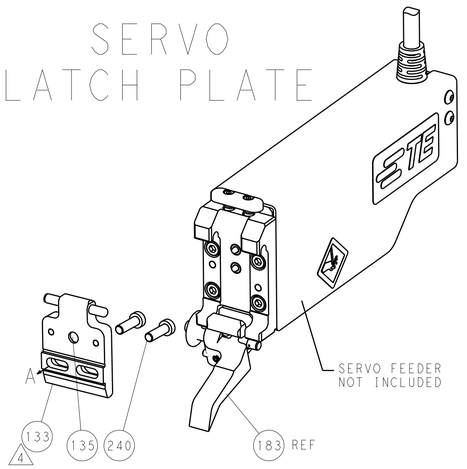

CAM POSITIONS

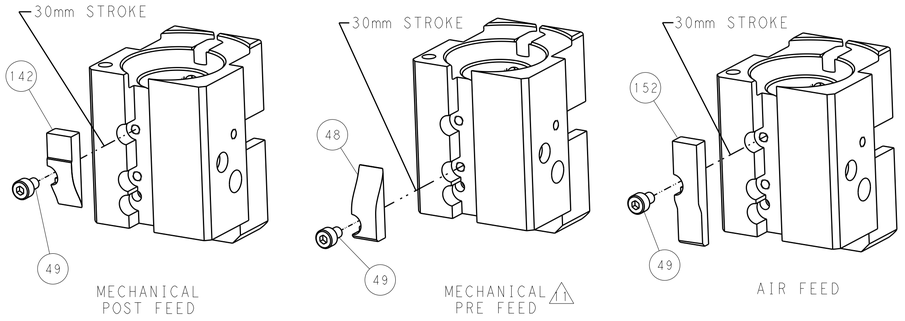

PACIFIC VERSION

Shown on sheets 3 of 4 & 4 of 4

(Atlantic version shown on sheets 1 of 4 & 2 of 4)

THIS DRAWING IS A CONTROLLED DOCUMENT FOR TYCO ELECTRONICS CORPORATION IT IS SUBJECT TO CHANGE AND THE CONTROLLING ENGINEERING ORGANIZATION SHOULD BE CONTACTED FOR THE LATEST REVISION.

DIMENSIONS: mm

TOLERANCES UNLESS OTHERWISE SPECIFIED:
0 PLC ±.
1 PLC ±0.5
2 PLC ±0.13
3 PLC ±0.013
4 PLC ±0.0001
ANGLES ±.

MATERIAL -
FINISH -

DWN	X.ZHAO	03JUN2012
CHK	T.ELBIN	03JUN2012
APVD	S.XI	03JUN2012
PRODUCT SPEC	-	
APPLICATION SPEC	-	
WEIGHT	-	

TE Connectivity
Harrisburg, PA 17105-3608

NAME: Ocean End Feed Applicator -

SIZE	CAGE CODE	DRAWING NO	RESTRICTED TO
A1	00779	C-2150012	-

Customer Accessible Production Drawing | SCALE 1:1 | SHEET 4 OF 4 | REV A

AMP 4805 REV 31MAR2000

SHEETS 1 & 2 ARE NOT REQUIRED FOR PACIFIC VERSION