8	7	6	5	4	3	2	1

THIS DRAWING IS UNPUBLISHED. RELEASED FOR PUBLICATION 20
© COPYRIGHT 20 BY TYCO ELECTRONICS CORPORATION. ALL RIGHTS RESERVED.

ATLANTIC VERSION TERMINATOR INTERFACE ADAPTER	PART NUMBER	REVISION	DESCRIPTION	FEED TYPE	APPLICATOR STYLE CONVERSION CHART: CONVERT TO	PART NUMBERS REQUIRED					
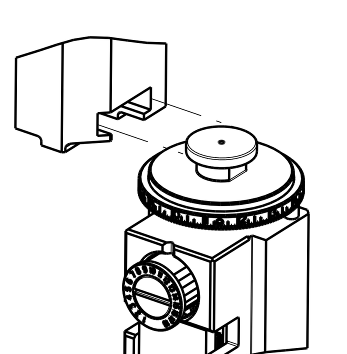	2151624-1	C	FINE CRIMP HEIGHT ADJUST	MECHANICAL	PNEUMATIC FEED	2119950-1	1338685-1	5-18022-5	2119641-1	2119799-1	2063440-1
					SERVO LATCH PLATE	2119951-1	-	8-2151624-5	1901094-3	-	2168400-6 (QUANTITY 2)
					SMART APPLICATOR	2161326-1	-	8-2151624-4	-	-	-
	2151624-2	C	FINE CRIMP HEIGHT ADJUST	PNEUMATIC	MECHANICAL FEED	2119949-1	1338685-1	5-18022-5	2119653-1	-	-
					SERVO LATCH PLATE	2119951-1	-	8-2151624-5	1901094-3	-	2168400-6 (QUANTITY 2)
					SMART APPLICATOR	2161326-1	-	8-2151624-4	-	-	-
	2151624-5	C	FINE CRIMP HEIGHT ADJUST	SERVO LATCH PLATE △4	MECHANICAL FEED	2119949-1	1338685-1	5-18022-5	2119653-1	-	-
					PNEUMATIC FEED	2119950-1	1338685-1	5-18022-5	2119641-1	2119799-1	2063440-1
	2151624-6	C	NON-CRIMP HEIGHT ADJUST	△4 SERVO LATCH PLATE △12	-	-	-	-	-	-	-
					-	-	-	-	-	-	-
	2151624-7	C	FINE CRIMP HEIGHT ADJUST	NONE	-	-	-	-	-	-	-
	7-2151624-7	C	CRIMP TOOLING KIT	-	-	-	-	-	-	-	-

SET UP GAUGE 2119599-1	LOC A	DIST 66

REVISIONS					
P	LTR	DESCRIPTION	DATE	DWN	APVD
	A	RELEASE	07MAY2012	L.Z	S.X
	B	ECR-12-008740	11MAY2012	L.Z	S.X
	B1	ECR-14-009232	20JUN2014	JH	TE
	C	ECR-14-010300	10JUL2014	XZ	JT

APPLICATOR DATA		
CRIMP	SIZE	TYPE
WIRE	2.21 mm [.087]	F
INSUL	3.56 mm [.140]	O
APPLICATOR INSTRUCTIONS 408-10389		

TERMINAL DATA: YAZAKI TERMINAL	YAZAKI CRIMP SPECIFICATION		
TERMINAL NAME: 1.5 SYSTEM SEALED TERMINAL			
WIRE STRIP LENGTH 5.00-5.50 mm [.197-.217 IN]	INSULATION DIAMETER RANGE △13 Ø -		
TERMINAL APPLICATION SPECIFICATION	YAZAKI Rev 72-WT08-769-1 - -	- - -	
TERMINALS APPLIED			
TE TERMINAL	YAZAKI TERMINAL	TE SEAL	YAZAKI SEAL
1572219-1	7114-4103-02	286814-1	7158-3031-90
1572219-2	7114-4103-08		

WIRE SIZE	CRIMP HEIGHT mm [INCH]	CRIMP HEIGHT △9 REFERENCE SETTING
1.25mm2	1.25+/-0.05 [.049+/-.002]	4.9
1.00mm2	1.25+/-0.05 [.049+/-.002]	4.9
18 AWG OR 0.80mm2	1.20+/-0.05 [.047+/-.002]	5.5
0.75mm2	1.20+/-0.05 [.047+/-.002]	5.5

*WARNING
ON INSTALLATION, SET WIRE DISC, ITEM 40 TO LARGEST WIRE SIZE SETTING. USE OF SETTINGS BELOW MINIMUM REQUIRED CRIMP HEIGHT SETTING WILL CAUSE DAMAGE TO CRIMP TOOLING.

△1 RECOMMENDED SPARE PARTS

△2 GREASE BEARING SURFACES LIGHTLY

3. LUBRICATE DAILY PER THE APPLICATOR INSTRUCTION SHEET SUPPLIED WITH THE APPLICATOR.

△4 APPLICATOR SPECIFIC DATA TO BE ENTERED INTO BLANK MEMORY CHIP AT ASSEMBLY. SEE BELOW FOR PART NUMBER:
- MECHANICAL FEED WITH "SMART APPLICATOR" CONVERSION: 8-2151624-4
- PNEUMATIC FEED WITH "SMART APPLICATOR" CONVERSION: 8-2151624-4
- SERVO FEED WITH "FINE CRIMP HEIGHT ADJUST": 8-2151624-5
- SERVO FEED WITH "NON-CRIMP HEIGHT ADJUST": 8-2151624-6

5. ADJUSTMENT OF THE STRIPPER MAY BE REQUIRED WHEN MOVING THE APPLICATOR BETWEEN BENCH AND LEADMAKER APPLICATIONS.

△6 APPLY PART NUMBER 1-23419-5 LOCTITE TO THREADS OF ITEMS 50, 62.
APPLY PART NUMBER 2-23419-6 LOCTITE TO THREADS OF ITEMS 242.
FOR -6 ONLY APPLY PART NUMBER 1-23419-5 LOCTITE TO THREADS OF ITEMS 37, 50.

△7 GREASE THREADS, GROOVE AND O-RING ON ITEMS 35 & 252.

△8 MAGNET, ITEM 166 MUST BE ORIENTED CORRECTLY IN ORDER TO PROPERLY ACTUATE THE COUNTER.

△9 CRIMP HEIGHT REFERENCE SETTING WAS THE SETTING USED WHEN THE APPLICATOR WAS QUALIFIED AT THE FACTORY. ADJUSTMENT MAY BE NECESSARY WHEN RUNNING APPLICATOR IN THE FIELD.

△10 SPARE FEED CAM STORAGE LOCATION REFER TO INSTRUCTION SHEET FOR ADDITIONAL INFORMATION.

△11 TO CONVERT THE APPLICATOR TO A NON-CARRIER CUTTING STYLE, REMOVE ITEM 13 AND ATTACH TO THE LOCATION ON THE BACK SIDE OF THE HOUSING. REFER TO INSTRUCTION SHEET FOR ADDITIONAL INFORMATION.

△12 WHEN ASSEMBLING -6 NON-CRIMP HEIGHT ADJUST APPLICATOR USE SHIM PACK 2119957-2 TO ALIGN APPLICATOR´S MAXIMUM WIRE CRIMP HEIGHT AT NORMAL TERMINATOR SHUT HEIGHT

△13 THIS APPLICATOR APPLIES TERMINAL WITH A SEAL. THE INSULATION DIAMETER IS 1.63-2.40mm.

△14 APPLY TORQ-SEAL IN ALLEN SOCKET TO FILL HOLE AFTER FLAT HD HAS BEEN ADJUSTED TO CORRECT HEIGHT AT QUALIFICATION. APPLY #1-23419-5 LOC-TITE TO THREADS.

NOTE	-77	-7	-6	-5	-2	-1	PART NO	DESCRIPTION	ITEM NO
	-	-	1	-	-	-	2119758-1	RAM, AMP STYLE, SIDE FEED, NON-ADJ.	245
	-	1	1	1	1	1	2119082-7	CAM, SNAIL, INSULATION ADJUSTMENT	244
	-	1	1	1	1	1	2079764-1	WASHER, WAVE SPRING, CREST-TO-CREST	243
△6	-	1	1	1	1	1	2119083-1	RETAINER, INSULATION DIAL	242
	-	1	1	1	1	1	7-18023-7	SCR, SKT HD CAP M3 X 4.0	241
	-	-	2	2	-	-	2168400-6	SHCS, LOW HEAD, RoHS, M5 X 16	240
	-	-	-	-	-	1	2119580-1	MECHANICAL FEED ASSEMBLY	239
	-	-	-	-	1	-	2063440-1	AIR FEED MODULE	238
	-	-	1	1	-	-	2119740-2	TAG,IDENTIFICATION	213
	-	-	1	1	-	-	1901094-3	SPACER, FEEDER	198
	-	1	1	1	1	1	993111-1	PIN, SLOTTED SPRING 3.0 X 20.0	177
	-	1	1	1	1	1	8-22280-7	SPRING, COMPRESSION	176
	-	1	1	1	1	1	1752353-2	GUIDE PIN,HOLDDOWN	175
	-	1	1	1	1	1	1901680-2	GUIDE PIN,HOLDDOWN	174
	-	-	-	-	2	-	21045-3	RING, RETAIN, EXTERN, 3/16 CRESCENT	172
	-	1	1	1	1	1	994969-1	MAGNET, RARE EARTH HIGH ENERGY	166
	-	REF	REF	REF	REF	REF	994970-2	COUNTER, MAGNETIC	164
	-	-	-	-	1	-	240638-1	SPRING, FEED FINGER	163
	-	-	-	-	1	-	3-23627-7	PIN, RETAIN, GRVD, 3/16 X .854	137
	-	-	-	-	1	-	2119799-1	HOLDER,FEED FINGER, AF	136
	-	-	REF	REF	-	-	SEE NOTE 4	MEMORY CHIP, PROGRAMMED	135
	-	-	1	1	-	-	1633743-1	SERVO FEED LATCH ASM	133
	-	1	1	1	1	1	1-18028-2	WASHER, FLAT, REG M4	119
	-	-	REF	REF	-	-	2119944-1	FEED FINGER ASSEMBLY,SF	117
	-	1	1	1	1	1	455888-5	SPACER, CRIMPER	82
	-	1	1	1	1	1	2119956-1	DOCUMENTATION PACKAGE	71
	-	1	-	-	1	1	2119740-1	TAG,IDENTIFICATION	67
	-	2	2	2	2	2	2168078-1	SCREW, DRIVE, RH, RoHS, 2 x .188	66
	-	1	-	1	1	1	2119793-1	LIMITER, ADJUSTMENT BOLT	63
△6	-	3	-	3	3	3	992763-5	SCR, SET, SOC, CONE POINT, M3 x 4.0	62
	-	1	1	1	1	1	2079383-4	SCR, BHSC, RoHS (M4 X 8)	60
	-	-	-	-	1	1	5-18022-5	SCR, HEX HD CAP, M4 X 6.0	59
	-	1	1	1	1	1	985575-3	SCR, FLT SKT HD CAP M3 X 10.0	57
	-	-	-	-	1	1	1338685-1	PAWL, FEED	56
	-	4	4	4	4	4	2168400-1	SHCS, LOW HEAD, RoHS, M4 X 12	54
	-	1	1	1	1	1	1-5018030-0	NUT, HEX, REG, RoHS, M3.5	52
	-	1	1	1	1	1	1901681-1	HOLDDOWN, TERMINAL	51
△6	-	1	1	1	1	1	1-1752354-8	STANDOFF,HOLD-DOWN	50
	-	-	-	-	1	2	18023-9	SCR, SKT HD CAP M4 X 6.0	49
	-	-	-	-	-	1	2119652-1	FEED CAM, PRE FEED	48
	-	-	-	-	-	1	2119653-1	FEED CAM, POST FEED	47
	-	1	1	1	1	1	2119656-9	APPLICATOR BASIC ASSEMBLY, SF	46
	-	1	-	1	1	1	2119370-1	RAM, AMP STYLE, SIDE FEED	44
	-	1	1	1	1	1	2079383-7	SCR, BHSC, RoHS (M8 X 25)	41
	-	1	-	1	1	1	2119645-1	DISC, NUMBERED FA WIRE ADJUSTMENT	40
	-	1	-	1	1	1	2119957-1	APPLICATOR SHIM PACK	39
	-	1	1	1	1	1	2119644-1	RAM WASHER, PRECISION	38
△6	-	1	1	1	1	1	2119085-1	FA HEAD, ATLANTIC STYLE	37
	-	1	-	1	1	1	2119092-1	BOLT, ADJUSTMENT	35
	-	1	1	1	1	1	2-1752356-0	SUPPORT, TERMINAL	34
	-	2	2	2	2	2	2079383-5	SCR, BHSC, RoHS (M4 X 20)	33
	-	1	1	1	1	1	2161328-1	HEX HEAD, FLANGED, M5 x 8mm LONG	32
	-	1	1	1	1	1	1-1320908-2	SPACER, STRIP GUIDE	30
	-	1	1	1	1	1	2119959-4	ASSEMBLY, STRIP GUIDE	29
	-	1	1	1	1	1	455888-4	SPACER, CRIMPER	28
	-	1	1	1	1	1	240792-2	DRAG, TERMINAL	25
	-	1	1	1	1	1	1320928-6	STRIP GUIDE	24
	-	1	1	1	1	1	2168083-2	SCR, SKT HD CAP, RoHS, M4 X 8.0	21
	-	1	1	1	1	1	1-18028-2	WASHER, FLAT, REG M4	20
	-	1	1	1	1	1	2119533-1	STRIPPER, SIDE FEED	19
△1	-	1	1	1	1	1	2119806-1	INSERT, SHEAR	13
	-	1	1	1	1	1	3-22280-3	SPRING, COMPRESSION	12
	-	1	1	1	1	1	1-356885-4	STOP, SHEAR	11
△1	-	1	1	1	1	1	2119805-1	SHEAR HOLDER, FRONT	10
△1	-	1	1	1	1	1	318707-1	FLOATING SHEAR, FRONT	9
△1	1	1	1	1	1	1	1633927-9	ANVIL, COMBINATION	8
	-	-	-	-	-	-	-	-	7
	-	-	-	-	-	-	-	-	6
	-	1	1	1	1	1	2119781-1	DEPRESSOR, SHEAR	5
	-	1	1	1	1	1	3-238011-1	BLOCK, CRIMPER SPACER	4
△1	1	1	1	1	1	1	1633965-9	CRIMPER, INSULATION O PREMIUM	3
	-	-	-	-	-	-	-	-	2
△1	1	1	1	1	1	1	3-1490019-7	CRIMPER, WIRE PREMIUM	1

-77	-7	-6	-5	-2	-1	PART NO	DESCRIPTION	ITEM NO
-	-	1	-	-	-	2119957-2	APPLICATOR SHIM PACK	260
-	1	-	1	1	1	8-21084-0	O-RING, .676 ID, .070 DIA. MAT.	252
-	-	-	-	1	-	2119640-1	PUSH ROD, AIR FEED	250
-	-	-	-	1	-	2079988-1	BUSHING, LCH5-12, MISUMI	249
-	-	-	-	1	-	2119641-1	FEED CAM, AIR FEED	248
-	1	-	1	1	1	2119798-1	DETENT PIN	247
-	1	-	1	1	1	1-22279-3	SPRING, COMPRESSION	246

ATLANTIC VERSION
Shown on sheets 1 of 4 & 2 of 4
(Pacific version shown on sheets 3 of 4 & 4 of 4)

THIS DRAWING IS A CONTROLLED DOCUMENT FOR TYCO ELECTRONICS CORPORATION IT IS SUBJECT TO CHANGE AND THE CONTROLLING ENGINEERING ORGANIZATION SHOULD BE CONTACTED FOR THE LATEST REVISION.

DWN	BOB HIGMAN 19MAR2012
CHK	T.ELBIN 19MAR2012
APVD	M.CLIFFORD 19MAR2012
PRODUCT SPEC	-
APPLICATION SPEC	-
WEIGHT	-
DIMENSIONS:	mm
TOLERANCES UNLESS OTHERWISE SPECIFIED:	0 PLC ±- ; 1 PLC ±0.5 ; 2 PLC ±0.13 ; 3 PLC ±0.013 ; 4 PLC ±0.0001 ; ANGLES ±-
MATERIAL	- -
FINISH	- -

TE Connectivity
Harrisburg, PA 17105-3608

NAME	Ocean Side Feed Applicator -		
SIZE A1	CAGE CODE 00779	DRAWING NO C-2151624	RESTRICTED TO -
Customer Accessible Production Drawing	SCALE 1:2	SHEET 1 OF 4	REV C

SHEETS 3 & 4 ARE NOT REQUIRED FOR ATLANTIC VERSION

AMP 4805 REV 31MAR2000

THIS DRAWING IS UNPUBLISHED. RELEASED FOR PUBLICATION 20
© COPYRIGHT 20 BY TYCO ELECTRONICS CORPORATION. ALL RIGHTS RESERVED.

LOC	DIST
A	66

REVISIONS

P	LTR	DESCRIPTION	DATE	DWN	APVD
	-	SEE SHEET 1	-	-	-

FEED TYPE MECHANICAL

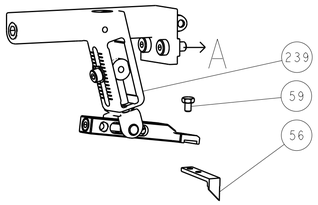

PNEUMATIC

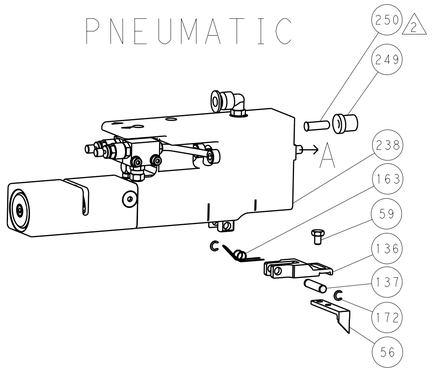

SERVO LATCH PLATE

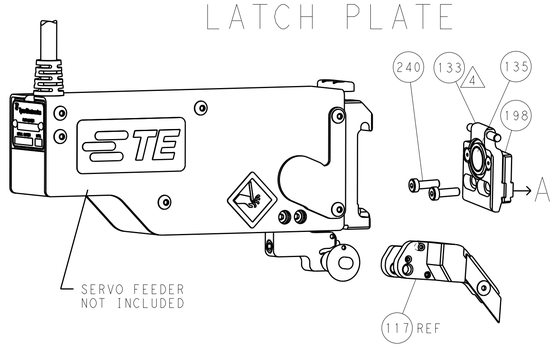

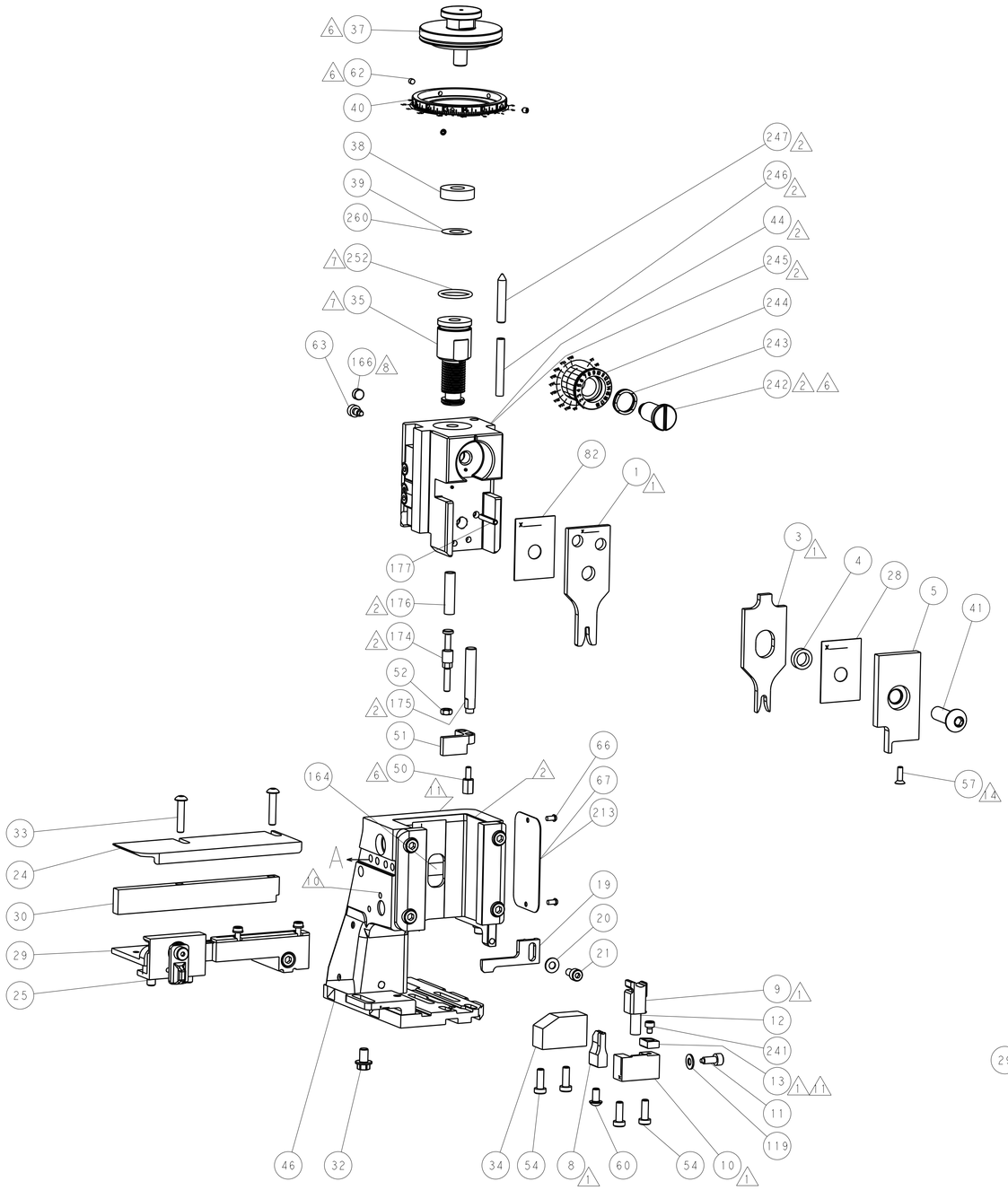

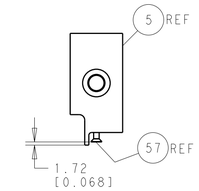

SHEAR DEPRESSOR DETAIL

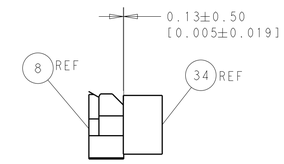

TERMINAL SUPPORT LOCATION

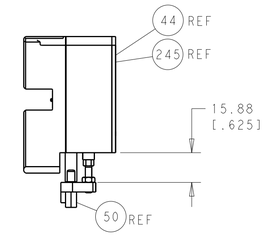

HOLDDOWN SET-UP

ITEM 30 LOCATED AT
REAR HOLES

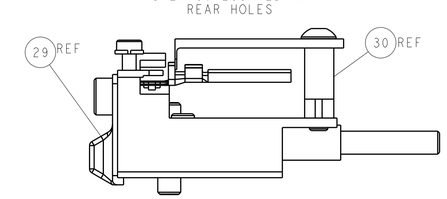

FEED TRACK POSITION
GUIDE BY INSULATION BARREL

CAM POSITIONS

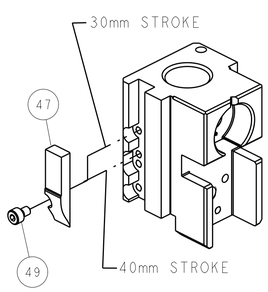

MECHANICAL
POST FEED

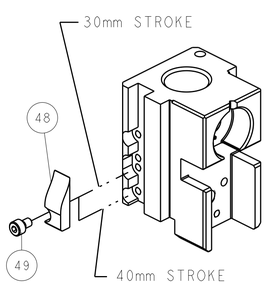

MECHANICAL
PRE FEED

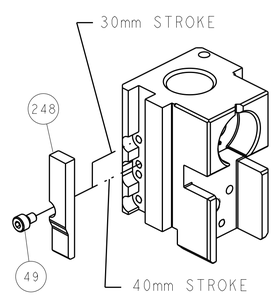

AIR FEED

ATLANTIC VERSION

Shown on sheets 1 of 4 & 2 of 4
(Pacific version shown on sheets 3 of 4 & 4 of 4)

THIS DRAWING IS A CONTROLLED DOCUMENT FOR TYCO ELECTRONICS CORPORATION IT IS SUBJECT TO CHANGE AND THE CONTROLLING ENGINEERING ORGANIZATION SHOULD BE CONTACTED FOR THE LATEST REVISION.

DWN	BOB HIGMAN	19MAR2012
CHK	T.ELBIN	19MAR2012
APVD	M CLIFFORD	19MAR2012

DIMENSIONS: mm

TOLERANCES UNLESS OTHERWISE SPECIFIED:
0 PLC ±-
1 PLC ±0.5
2 PLC ±0.13
3 PLC ±0.013
4 PLC ±0.0001
ANGLES ±-

MATERIAL - -
FINISH - -

PRODUCT SPEC -
APPLICATION SPEC -
WEIGHT -

TE Connectivity
Harrisburg, PA 17105-3608

NAME: Ocean Side Feed Applicator -

SIZE	CAGE CODE	DRAWING NO	RESTRICTED TO
A1	00779	C-2151624	-

Customer Accessible Production Drawing | SCALE 1:2 | SHEET 2 OF 4 | REV C

SHEETS 3 & 4 ARE NOT REQUIRED FOR ATLANTIC VERSION

THIS DRAWING IS UNPUBLISHED. RELEASED FOR PUBLICATION 20
© COPYRIGHT 20 BY TYCO ELECTRONICS CORPORATION. ALL RIGHTS RESERVED.

SET UP GAUGE 2119599-1 | LOC A | DIST 66

REVISIONS

P	LTR	DESCRIPTION	DATE	DWN	APVD
	-	SEE SHEET 1	-	-	-

PACIFIC VERSION TERMINATOR INTERFACE ADAPTER	PART NUMBER	REVISION	DESCRIPTION	FEED TYPE
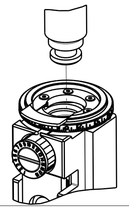	2-2151624-1	C	FINE CRIMP HEIGHT ADJUST	MECHANICAL
	2-2151624-2	C	FINE CRIMP HEIGHT ADJUST	PNEUMATIC
	2-2151624-5	C	FINE CRIMP HEIGHT ADJUST	SERVO LATCH PLATE 4
	2-2151624-7	C	FINE CRIMP HEIGHT ADJUST	NONE
	7-2151624-7	C	CRIMP TOOLING KIT	-

APPLICATOR STYLE CONVERSION CHART

CONVERT TO	PART NUMBERS REQUIRED					
PNEUMATIC FEED	2119950-1	1338685-1	5-18022-5	2119641-2	2119799-1	2063440-1
SERVO LATCH PLATE	2119951-1	-	8-2151624-5	1901094-3	-	2168400-6 (QUANTITY 2)
SMART APPLICATOR	2161326-1	-	8-2151624-4	-	-	-
MECHANICAL FEED	2119949-1	1338685-1	5-18022-5	2119653-2	-	-
SERVO LATCH PLATE	2119951-1	-	8-2151624-5	1901094-3	-	2168400-6 (QUANTITY 2)
SMART APPLICATOR	2161326-1	-	8-2151624-4	-	-	-
MECHANICAL FEED	2119949-1	1338685-1	5-18022-5	2119653-2	-	-
PNEUMATIC FEED	2119950-1	1338685-1	5-18022-5	2119641-2	2119799-1	2063440-1
-	-	-	-	-	-	-
-	-	-	-	-	-	-

APPLICATOR DATA

CRIMP	SIZE	TYPE
WIRE	2.21 mm [.087]	F
INSUL	3.56 mm [.140]	O

APPLICATOR INSTRUCTIONS 408-10389

TERMINAL DATA: YAZAKI TERMINAL YAZAKI CRIMP SPECIFICATION

TERMINAL NAME: 1.5 SYSTEM SEALED TERMINAL

WIRE STRIP LENGTH	INSULATION DIAMETER RANGE 12
5.00-5.50 mm [.197-.217 IN]	Ø - -

TERMINAL APPLICATION SPECIFICATION: YAZAKI Rev 72-WT08-769-1 - - - - -

TERMINALS APPLIED

TE TERMINAL	YAZAKI TERMINAL	TE SEAL	YAZAKI SEAL
1572219-1	7114-4103-02	286814-1	7158-3031-90
1572219-2	7114-4103-08		

WIRE SIZE	CRIMP HEIGHT mm [INCH]	CRIMP HEIGHT REFERENCE SETTING 9
1.25mm2	1.25+/-0.05 [.049+/-.002]	4.9
1.00mm2	1.25+/-0.05 [.049+/-.002]	4.9
18 AWG OR 0.80mm2	1.20+/-0.05 [.047+/-.002]	5.5
0.75mm2	1.20+/-0.05 [.047+/-.002]	5.5

1 RECOMMENDED SPARE PARTS

2 GREASE BEARING SURFACES LIGHTLY

3. LUBRICATE DAILY PER THE APPLICATOR INSTRUCTION SHEET SUPPLIED WITH THE APPLICATOR.

4 APPLICATOR SPECIFIC DATA TO BE ENTERED INTO BLANK MEMORY CHIP AT ASSEMBLY. SEE BELOW FOR PART NUMBER:
MECHANICAL FEED WITH "SMART APPLICATOR" CONVERSION: 8-2151624-4
PNEUMATIC FEED WITH "SMART APPLICATOR" CONVERSION: 8-2151624-4
SERVO FEED WITH "FINE CRIMP HEIGHT ADJUST": 8-2151624-5

5. ADJUSTMENT OF THE STRIPPER MAY BE REQUIRED WHEN MOVING THE APPLICATOR BETWEEN BENCH AND LEADMAKER APPLICATIONS.

6 APPLY PART NUMBER 1-23419-5 LOCTITE TO THREADS OF ITEMS 50, 62. APPLY PART NUMBER 2-23419-6 LOCTITE TO THREADS OF ITEMS 242.

7 GREASE THREADS, GROOVE AND O-RING ON ITEMS 139 & 152.

8 MAGNET MUST BE ORIENTED CORRECTLY IN ORDER TO PROPERLY ACTUATE THE COUNTER.

9 CRIMP HEIGHT REFERENCE SETTING WAS THE SETTING USED WHEN THE APPLICATOR WAS QUALIFIED AT THE FACTORY. ADJUSTMENT MAY BE NECESSARY WHEN RUNNING APPLICATOR IN THE FIELD.

10 SPARE FEED CAM STORAGE LOCATION REFER TO INSTRUCTION SHEET FOR ADDITIONAL INFORMATION.

11 TO CONVERT THE APPLICATOR TO A NON-CARRIER CUTTING STYLE, REMOVE ITEM 13 AND ATTACH TO THE LOCATION ON BACK SIDE OF THE HOUSING. REFER TO INSTRUCTION SHEET FOR ADDITIONAL INFORMATION.

12 THIS APPLICATOR APPLIES TERMINAL WITH A SEAL. THE INSULATION DIAMETER IS 1.63-2.40mm.

13 APPLY TORQ-SEAL IN ALLEN SOCKET TO FILL HOLE AFTER FLAT HD HAS BEEN ADJUSTED TO CORRECT HEIGHT AT QUALIFICATION. APPLY #1-23419-5 LOC-TITE TO THREADS.

*WARNING
ON INSTALLATION, SET WIRE DISC, ITEM 40 TO LARGEST WIRE SIZE SETTING. USE OF SETTINGS BELOW MINIMUM REQUIRED CRIMP HEIGHT SETTING WILL CAUSE DAMAGE TO CRIMP TOOLING.

-77	-27	-25	-22	-21	PART NO	DESCRIPTION	ITEM NO
-	1	1	1	1	2119782-1	FINE ADJUST HEAD ASM, PACIFIC STYLE	251
-	-	-	1	-	2119640-1	PUSH ROD, AIR FEED	250
-	-	-	1	-	2079988-1	BUSHING, LCH5-12, MISUMI	249
-	1	1	1	1	1-22279-3	SPRING, COMPRESSION	246
-	1	1	1	1	2119082-7	CAM, SNAIL, INSULATION ADJUSTMENT	244

-77	-27	-25	-22	-21	PART NO	DESCRIPTION	ITEM NO
-	1	1	1	1	2079764-1	WASHER, WAVE SPRING, CREST-TO-CREST	243
-	1	1	1	1	2119083-1	RETAINER, INSULATION DIAL	242
-	1	1	1	1	7-18023-7	SCR, SKT HD CAP M3 X 4.0	241
-	-	2	-	-	2168400-6	SHCS, LOW HEAD, RoHS, M5 X 16	240
-	-	-	-	1	2119580-1	MECHANICAL FEED ASSEMBLY	239
-	-	-	1	-	2063440-1	AIR FEED MODULE	238
-	-	1	-	-	2119740-2	TAG,IDENTIFICATION	213
-	-	1	-	-	1901094-3	SPACER, FEEDER	198
-	1	1	1	1	993111-1	PIN, SLOTTED SPRING 3.0 X 20.0	177
-	1	1	1	1	8-22280-7	SPRING, COMPRESSION	176
-	1	1	1	1	1752353-2	GUIDE PIN,HOLDDOWN	175
-	1	1	1	1	1901680-2	GUIDE PIN,HOLDDOWN	174
-	-	-	2	-	21045-3	RING, RETAIN, EXTERN, 3/16 CRESCENT	172
-	1	1	1	1	994969-1	MAGNET, RARE EARTH HIGH ENERGY	166
-	REF	REF	REF	REF	994970-2	COUNTER, MAGNETIC	164
-	-	-	1	-	240638-1	SPRING, FEED FINGER	163
-	1	1	1	1	8-21084-1	O-RING, .801 ID, .070 DIA. MAT.	152
-	-	-	1	-	2119641-2	FEED CAM, AIR FEED	151
-	1	1	1	1	2119798-2	DETENT PIN	145
-	1	1	1	1	2079383-8	SCR, BHSC, RoHS (M4 X 16)	144
-	4	4	4	4	2168400-5	SHCS, LOW HEAD, RoHS, M4 X 20	143
					2119653-2	FEED CAM, POST FEED	142
-	1	1	1	1	1-2119656-0	APPLICATOR BASIC ASSEMBLY, SF	141
-	1	1	1	1	2119650-1	RAM, ASIAN STYLE, SIDE FEED	140
-	1	1	1	1	2119092-2	BOLT, ADJUSTMENT	139
-	-	-	1	-	3-23627-7	PIN, RETAIN, GRVD, 3/16 X .854	137
-	-	-	1	-	2119799-1	HOLDER,FEED FINGER, AF	136
-	-	REF	-	-	SEE NOTE 4	MEMORY CHIP, PROGRAMMED	135
-	-	1	-	-	1633743-1	SERVO FEED LATCH ASM	133
-	1	1	1	1	1-18028-2	WASHER, FLAT, REG M4	119
-	-	REF	-	-	2119944-1	FEED FINGER ASSEMBLY,SF	117
-	1	1	1	1	455888-5	SPACER, CRIMPER	82
-	1	1	1	1	2119956-1	DOCUMENTATION PACKAGE	71
-	1	-	1	1	2119740-1	TAG,IDENTIFICATION	67
-	2	2	2	2	2168078-1	SCREW, DRIVE, RH, RoHS, 2 x .188	66
-	1	1	1	1	2119793-1	LIMITER, ADJUSTMENT BOLT	63
-	3	3	3	3	992763-5	SCR, SET, SOC, CONE POINT, M3 x 4.0	62
-	-	-	1	1	5-18022-5	SCR, HEX HD CAP, M4 X 6.0	59
-	1	1	1	1	985575-3	SCR, FLT SKT HD CAP M3 X 10.0	57
-	-	-	1	1	1338685-1	PAWL, FEED	56
-	1	1	1	1	1-5018030-0	NUT, HEX, REG, RoHS, M3.5	52
-	1	1	1	1	1901681-1	HOLDDOWN, TERMINAL	51
-	1	1	1	1	1-1752354-8	STANDOFF,HOLD-DOWN	50
-	-	-	1	2	18023-9	SCR, SKT HD CAP M4 X 6.0	49
-	-	-	-	1	2119652-1	FEED CAM, PRE FEED	48
-	1	1	1	1	2079383-7	SCR, BHSC, RoHS (M8 X 25)	41
-	1	1	1	1	2119645-1	DISC, NUMBERED FA WIRE ADJUSTMENT	40
-	1	1	1	1	2119957-1	APPLICATOR SHIM PACK	39
-	1	1	1	1	2119644-1	RAM WASHER, PRECISION	38
-	1	1	1	1	2-1752356-0	SUPPORT, TERMINAL	34
-	2	2	2	2	2079383-5	SCR, BHSC, RoHS (M4 X 20)	33
-	1	1	1	1	2161328-1	HEX HEAD, FLANGED, M5 x 8mm LONG	32
-	1	1	1	1	1-1320908-2	SPACER, STRIP GUIDE	30
-	1	1	1	1	2119959-4	ASSEMBLY, STRIP GUIDE	29
-	1	1	1	1	455888-4	SPACER, CRIMPER	28
-	1	1	1	1	240792-2	DRAG, TERMINAL	25
-	1	1	1	1	1320928-6	STRIP GUIDE	24
-	1	1	1	1	2168083-2	SCR, SKT HD CAP, RoHS, M4 X 8.0	21
-	1	1	1	1	1-18028-2	WASHER, FLAT, REG M4	20
-	1	1	1	1	2119533-1	STRIPPER, SIDE FEED	19
-	1	1	1	1	2119806-1	INSERT, SHEAR	13
-	1	1	1	1	3-22280-3	SPRING, COMPRESSION	12
-	1	1	1	1	1-356885-4	STOP, SHEAR	11
-	1	1	1	1	2119805-1	SHEAR HOLDER, FRONT	10
-	1	1	1	1	318707-1	FLOATING SHEAR, FRONT	9
1	1	1	1	1	1633927-9	ANVIL, COMBINATION	8
-	-	-	-	-	-	-	7
-	-	-	-	-	-	-	6
-	1	1	1	1	2119781-1	DEPRESSOR, SHEAR	5
-	1	1	1	1	3-238011-1	BLOCK, CRIMPER SPACER	4
1	1	1	1	1	1633965-9	CRIMPER, INSULATION O PREMIUM	3
-	-	-	-	-	-	-	2
1	1	1	1	1	3-1490019-7	CRIMPER, WIRE PREMIUM	1

THIS DRAWING IS A CONTROLLED DOCUMENT FOR TYCO ELECTRONICS CORPORATION. IT IS SUBJECT TO CHANGE AND THE CONTROLLING ENGINEERING ORGANIZATION SHOULD BE CONTACTED FOR THE LATEST REVISION.

DWN 19MAR2012 BOB HIGMAN
CHK 19MAR2012 T ELBIN
APVD 19MAR2012 M CLIFFORD
PRODUCT SPEC -
APPLICATION SPEC -
WEIGHT -

DIMENSIONS: mm
TOLERANCES UNLESS OTHERWISE SPECIFIED:
0 PLC ±-
1 PLC ±0.5
2 PLC ±0.13
3 PLC ±0.013
4 PLC ±0.0001
ANGLES ±-
MATERIAL - -
FINISH - -

TE Connectivity
Harrisburg, PA 17105-3608

NAME Ocean Side Feed Applicator -

SIZE	CAGE CODE	DRAWING NO	RESTRICTED TO
A1	00779	C-2151624	-

Customer Accessible Production Drawing | SCALE 1:2 | SHEET 3 OF 4 | REV C

PACIFIC VERSION

Shown on sheets 3 of 4 & 4 of 4
(Atlantic version shown on sheets 1 of 4 & 2 of 4)

SHEETS 1 & 2 ARE NOT REQUIRED FOR PACIFIC VERSION

THIS DRAWING IS UNPUBLISHED. RELEASED FOR PUBLICATION 20
© COPYRIGHT 20 BY TYCO ELECTRONICS CORPORATION. ALL RIGHTS RESERVED.

LOC	DIST
A	66

REVISIONS

P	LTR	DESCRIPTION	DATE	DWN	APVD
	-	SEE SHEET 1	-	-	-

FEED TYPE

MECHANICAL

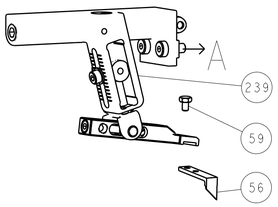

PNEUMATIC

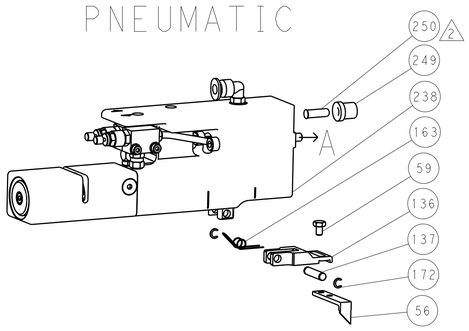

SERVO LATCH PLATE

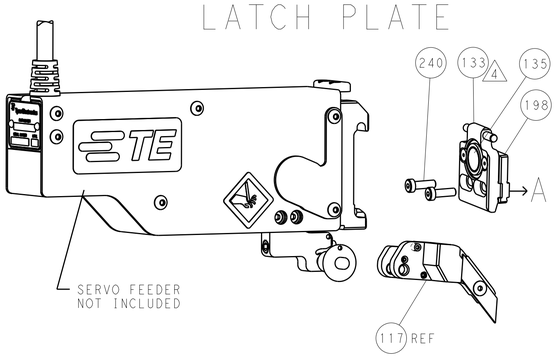

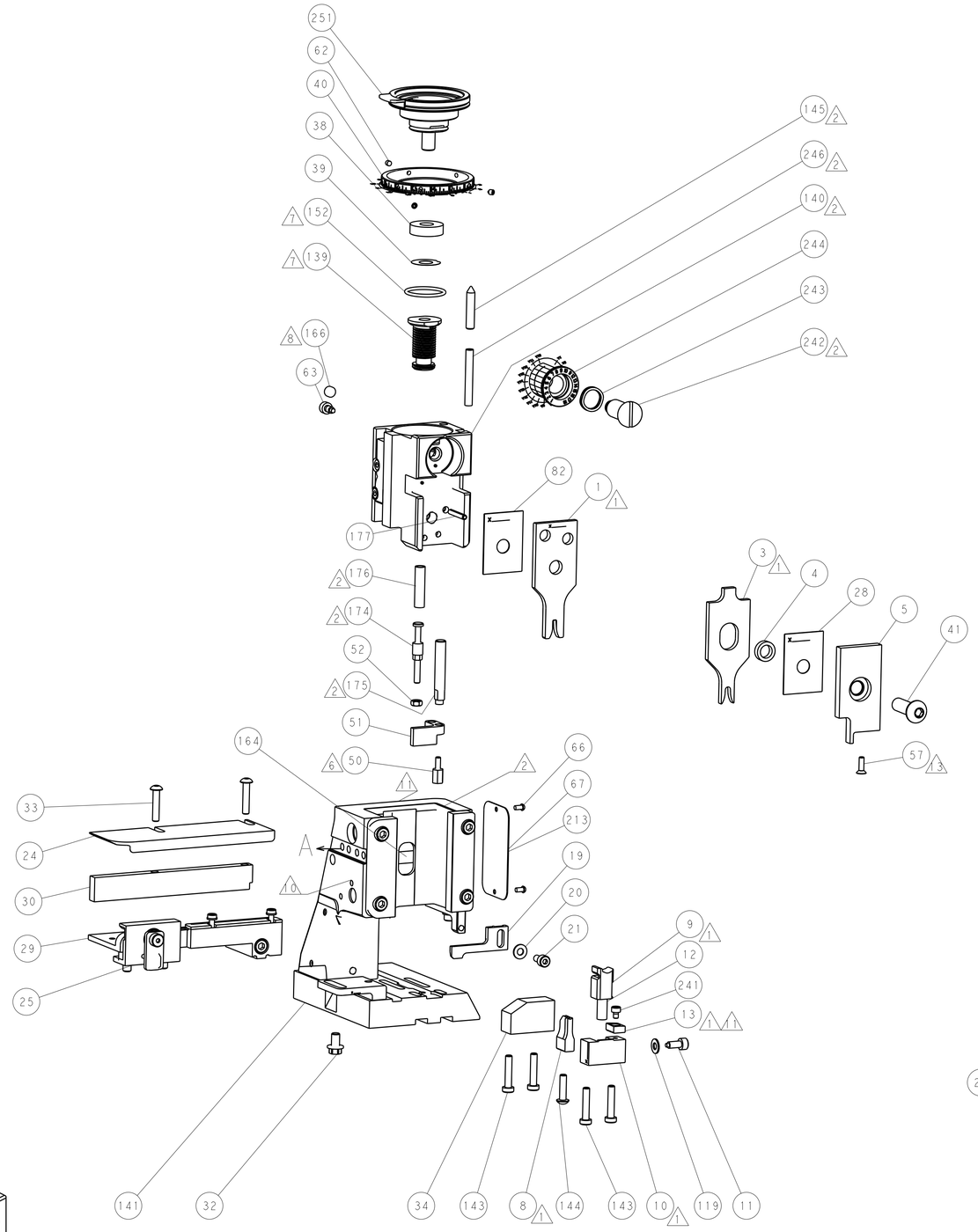

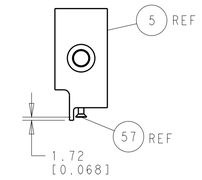

SHEAR DEPRESSOR DETAIL

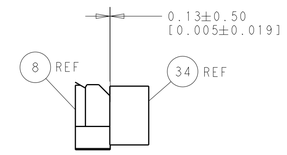

TERMINAL SUPPORT LOCATION

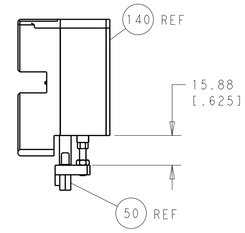

HOLDDOWN SET-UP

ITEM 30 LOCATED AT
REAR HOLES

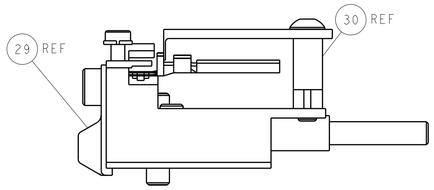

FEED TRACK POSITION
GUIDE BY INSULATION BARREL

CAM POSITIONS

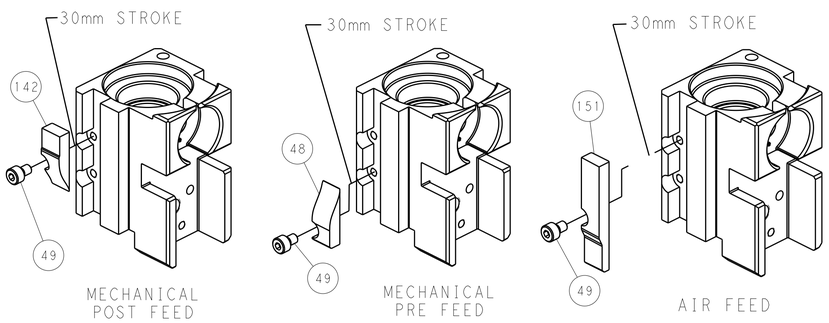

MECHANICAL
POST FEED

MECHANICAL
PRE FEED

AIR FEED

PACIFIC VERSION

Shown on sheets 3 of 4 & 4 of 4
(Atlantic version shown on sheets 1 of 4 & 2 of 4)

THIS DRAWING IS A CONTROLLED DOCUMENT FOR TYCO ELECTRONICS CORPORATION. IT IS SUBJECT TO CHANGE AND THE CONTROLLING ENGINEERING ORGANIZATION SHOULD BE CONTACTED FOR THE LATEST REVISION.

DWN	BOB HIGMAN	19MAR2012
CHK	T ELBIN	19MAR2012
APVD	M CLIFFORD	19MAR2012
PRODUCT SPEC	-	
APPLICATION SPEC	-	
WEIGHT	-	

DIMENSIONS: mm

TOLERANCES UNLESS OTHERWISE SPECIFIED:

0 PLC	± -
1 PLC	±0.5
2 PLC	±0.13
3 PLC	±0.013
4 PLC	±0.0001
ANGLES	± -

MATERIAL - -

FINISH - -

TE Connectivity
Harrisburg, PA 17105-3608

NAME: Ocean Side Feed Applicator -

SIZE	CAGE CODE	DRAWING NO	RESTRICTED TO
A1	00779	C-2151624	-

Customer Accessible Production Drawing

SCALE	SHEET	OF	REV
1:2	4	4	C

SHEETS 1 & 2 ARE NOT REQUIRED FOR PACIFIC VERSION