# Series 350000-11-RC RoHS/WEEE-Compliant SOIC-to-DIP Adapter

## FEATURES

- A cost-effective means of upgrading to SOIC without changing your PCB layout
- Available on 0.300 [7.62] centers. Consult **Data Sheet 18011** for adapters on 0.400 [10.16] or 0.600 [15.24] centers

## GENERAL SPECIFICATIONS

- BOARD MATERIAL: 0.062 [1.58] thick FR-4 **or** IS410 per IPC4101A/26 with 1-oz. Cu traces, both sides
- PADS: Finished with ENIG (Immersion Au over Electroless Ni)
- PINS: Brass 360 1/2-hard per UNS C36000 ASTM-B16-00
- PIN PLATING: 10µ [2.54µ] min. Au per MIL-G-45204 over 100µ [2.54µ] min. Ni per SAE AMS-QQ-N-290
- OPERATING TEMPERATURE: 105°C max.

## MOUNTING CONSIDERATIONS

- SUGGESTED PCB HOLE SIZE: 0.028 ±0.003 [0.71 ±0.08] dia.

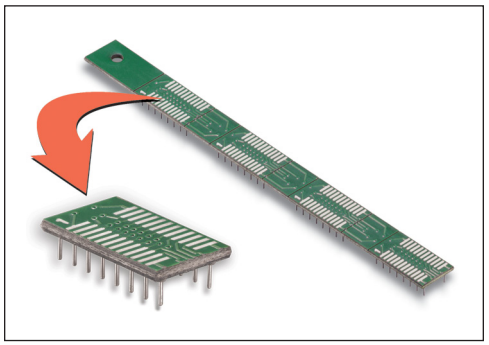

**CUSTOMIZATION**: In addition to the standard products shown on this page, Aries specializes in custom design and production. Special materials, platings, sizes, and configurations can be furnished, depending on the quantity. **NOTE**: Aries reserves the right to change product general specifications without notice.

ALL DIMENSIONS: INCHES [MILLIMETERS]

ALL TOLERANCES: ±0.005 [0.13] UNLESS OTHERWISE SPECIFIED

"A" = NO. OF PINS PER ROW X 0.100 [2.54]
"D" = (NO. OF PINS PER ROW - 1) X 0.100 [2.54]

CONSULT FACTORY FOR OTHER SIZES AND CONFIGURATIONS

## ORDERING INFORMATION

(see Table below)

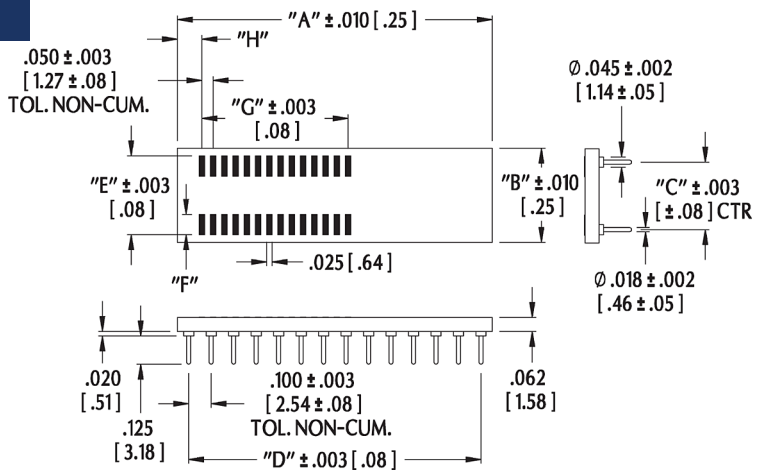


| P/N | Pins | Type | Dim. "B" | Centers "C" | Dim. "E" | Dim. "F" | Dim. "G" | Dim. "H" |
|---|---|---|---|---|---|---|---|---|
| **08-350000-11-RC** | 8 | SOIC | 0.460 [11.68] | 0.300 [7.62] | 0.455 [11.56] | 0.155 [3.94] | 0.150 [3.81] | 0.121 [3.07] |
| **14-350003-11-RC** | 14 | SOIC | 0.380 [9.65] | 0.300 [7.62] | 0.322 [8.18] | 0.080 [2.03] | 0.300 [7.62] | 0.200 [5.08] |
| **14-350000-11-RC** | 14 | SOIC | 0.450 [11.43] | 0.300 [7.62] | 0.420 [10.67] | 0.138 [3.51] | 0.500 [12.70] | 0.180 [4.57] |
| **16-350000-11-RC** | 16 | SOIC | 0.450 [11.43] | 0.300 [7.62] | 0.420 [10.67] | 0.138 [3.51] | 0.550 [13.97] | 0.180 [4.57] |
| **18-350000-11-RC** | 18 | SOIC | 0.450 [11.43] | 0.300 [7.62] | 0.420 [10.67] | 0.138 [3.51] | 0.550 [13.97] | 0.180 [4.57] |
| **20-350000-11-RC** | 20 | SOIC | 0.450 [11.43] | 0.300 [7.62] | 0.420 [10.67] | 0.138 [3.51] | 0.550 [13.97] | 0.180 [4.57] |
| **24-350000-11-RC** | 24 | SOIC | 0.450 [11.43] | 0.300 [7.62] | 0.420 [10.67] | 0.138 [3.51] | 0.550 [13.97] | 0.180 [4.57] |
| **20-350001-11-RC** | 20 | SOJ | 0.420 [10.67] | 0.300 [7.62] | 0.350 [8.89] | 0.090 [2.29] | 0.550 [13.97] | 0.060 [1.52] |
| **28-350002-11-RC** | 28 | SOIC | 0.400 [10.16] | 0.300 [7.62] | 0.350 [8.89] | 0.090 [2.29] | 0.650 [16.51] | 0.375 [9.53] |


ARIES ELECTRONICS, INC.
Bristol, PA 19007-6810 USA
TEL (215) 781-9956 • FAX (215) 781-9845
WWW.ARIESELEC.COM • INFO@ARIESELEC.COM


RoHS Compliant