180-040 (-03, -13, -23, -33)
MIL-PRF-28876 Type Wall Mount Receptacle Connector
for use with MIL-PRF-29504/14 and /15 Termini

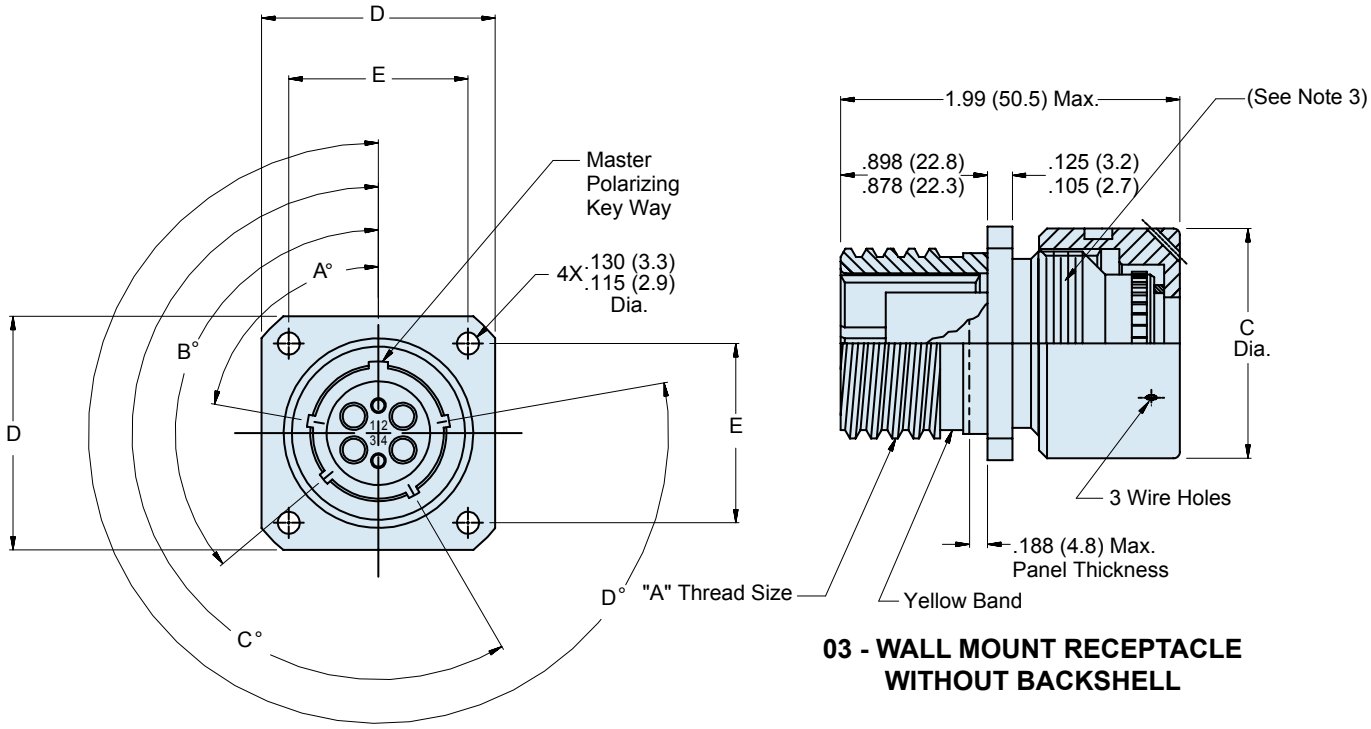

03 - WALL MOUNT RECEPTACLE WITHOUT BACKSHELL

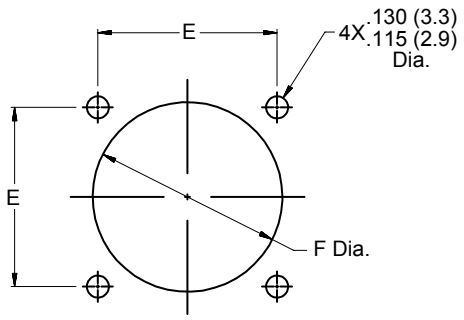

RECOMMENDED PANEL CUT-OUT

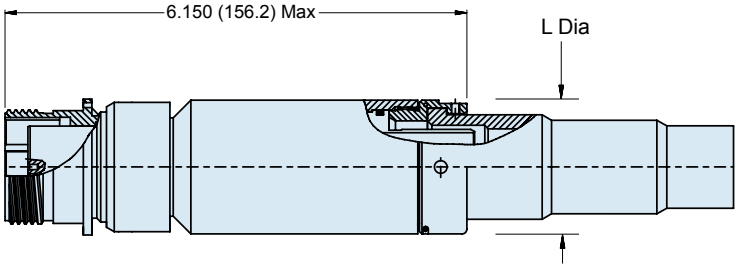

13 - WALL MOUNT RECEPTACLE WITH STRAIGHT BACKSHELL

TABLE VI: SHELL SIZE

Shell Size	D ± .020 (0.5)	E	F Dia ± .005 (0.1)	C Dia Max	L Dia Max	"A" Thread Size .1P-.2L-DS
11	1.022 (26.0)	.750 (19.1)	.812 (20.6)	.960 (24.4)	.960 (24.4)	.750 (19.05)
13	1.137 (28.9)	.843 (21.4)	.937 (23.8)	1.085 (27.6)	1.085 (27.6)	.875 (22.2)
15	1.257 (31.9)	.968 (24.6)	1.124 (28.5)	1.255 (31.9)	1.255 (31.9)	1.062 (26.9)
23	1.718 (43.6)	1.281 (32.5)	1.562 (39.7)	1.695 (43.1)	1.763 (44.8)	1.500 (38.1)

© 2010 Glenair, Inc.

180-040 (-06, -16, -26, -36)
MIL-PRF-28876 Type Plug Connector
for use with MIL-PRF-29504/14 and /15 Termini

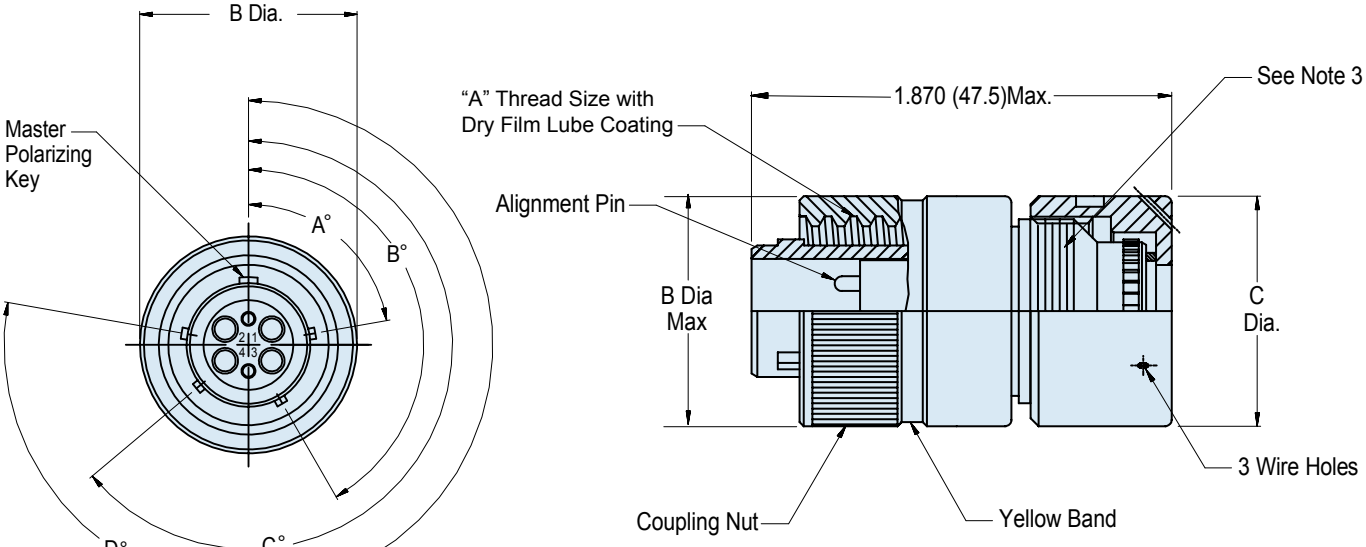

06 - PLUG WITHOUT STRAIGHT BACKSHELL

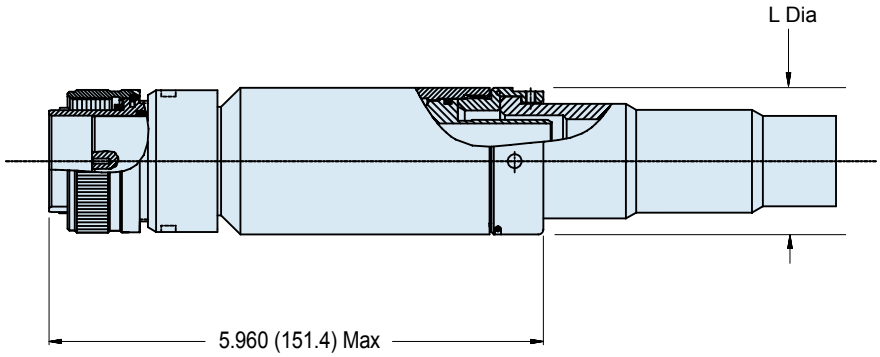

16 - PLUG WITH STRAIGHT BACKSHELL
(Consult Factory for 45° and 90° Backshell Versions)

TABLE VI: SHELL SIZE

Shell Size	B Dia Max	C Dia Max	L Dia Max	"A" Thread Size .1P-.2L-DS
11	1.028 (26.1)	.960 (24.4)	.960 (24.4)	.750 (19.05)
13	1.141 (29.0)	1.085 (27.6)	1.085 (27.6)	.875 (22.2)
15	1.263 (32.1)	1.255 (31.9)	1.255 (31.9)	1.062 (26.9)
23	1.705 (43.3)	1.695 (43.1)	1.763 (44.8)	1.500 (38.1)

© 2010 Glenair, Inc.

180-040 (-04, -14, -24, -34)
MIL-PRF-28876 Type Jam Nut Receptacle Connector
for use with MIL-PRF-29504/14 and /15 Termini

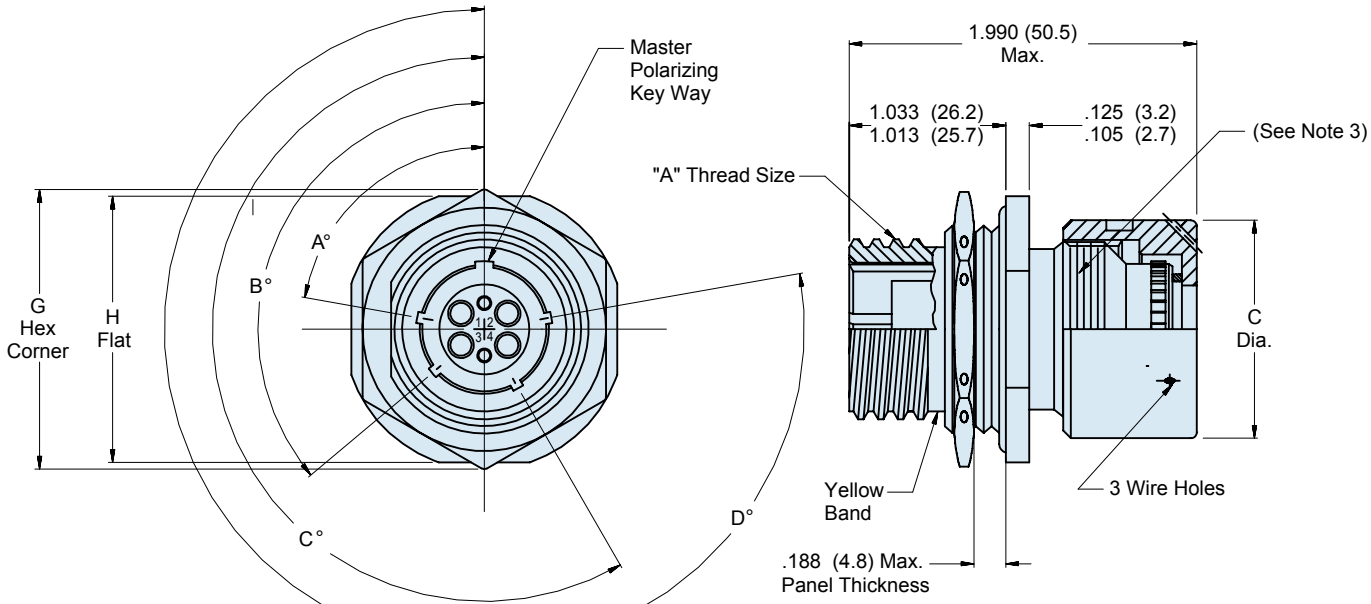

04 - JAM NUT MOUNT RECEPTACLE WITHOUT BACKSHELL

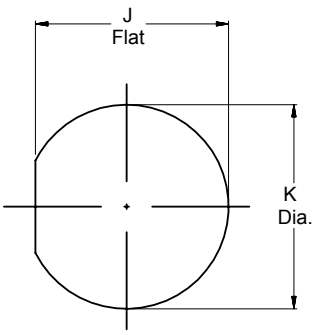

RECOMMENDED PANEL CUTOUT

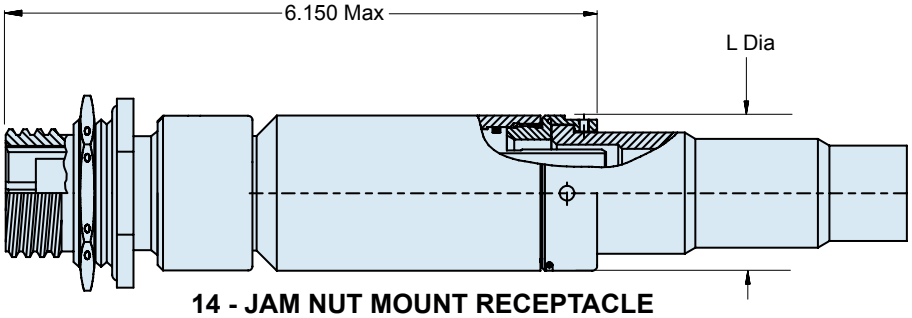

14 - JAM NUT MOUNT RECEPTACLE WITH STRAIGHT BACKSHELL
(Consult Factory for 45° and 90° Backshell Versions)

TABLE VI: SHELL SIZE

Shell Size	G Max	H ± .010 (0.3)	J ± .005 (0.1)	K Dia ± .005 (0.1)	C Dia Max	L Dia Max	"A" Thread Size .1P-.2L-DS
11	1.290 (32.8)	1.262 (32.1)	.848 (21.5)	.885 (22.5)	.960 (24.4)	.960 (24.4)	.750 (19.05)
13	1.435 (35.9)	1.387 (35.2)	.937 (24.7)	1.010 (25.7)	1.085 (27.6)	1.085 (27.6)	.875 (22.2)
15	1.650 (41.9)	1.575 (40.0)	1.160 (29.5)	1.198 (30.4)	1.255 (31.9)	1.255 (31.9)	1.062 (26.9)
23	2.093 (53.2)	2.014 (51.2)	1.598 (40.6)	1.635 (41.5)	1.695 (43.1)	1.763 (44.8)	1.500 (38.1)

© 2010 Glenair, Inc.