EVERLIGHT ELECTRONICS CO.,LTD.

# Technical Data Sheet

## *Chip LED with Bi-Color (Multi-Color)*

**18-225SURSYGC/S530-A4/E4/TR8**

### Features

- Package in 8mm tape on 7″ diameter reel.
- Compatible with automatic placement equipment.
- Compatible with infrared and vapor phase reflow solder process.
- Mono-color type.
- Pb-free.

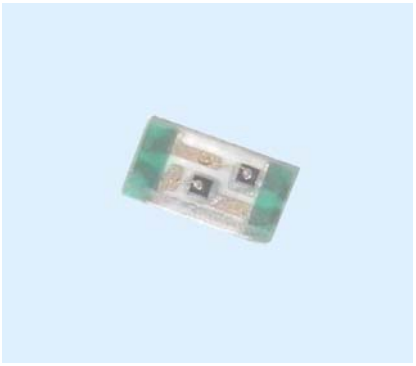

### Descriptions

- The 18-225 SMD Taping is much smaller than lead frame type components, thus enable smaller board size, higher packing density, reduced storage space and finally smaller equipment to be obtained.
- Besides, lightweight makes them ideal for miniature applications. etc.

### Applications

- Automotive: backlighting in dashboard and switch.
- Telecommunication: indicator and backlighting in telephone and fax.
- Flat backlight for LCD, switch and symbol.
- General use.

### Device Selection Guide

| Chip | | | Lens Color |
|---|---|---|---|
| **Type** | **Material** | **Emitted Color** | |
| **SUR** | **AlGaInP** | **Super Red** | **Water Clear** |
| **SYG** | **AlGaInP** | **Super Yellow Green** | |

## Package Outline Dimensions

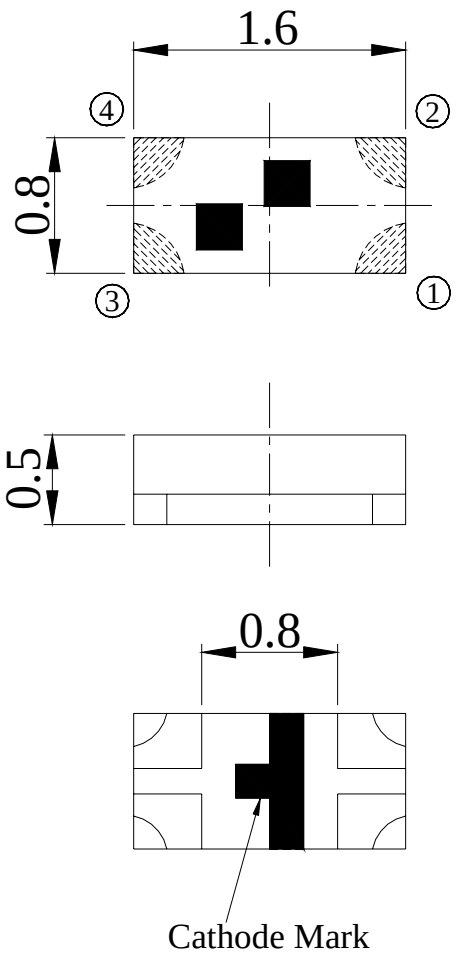


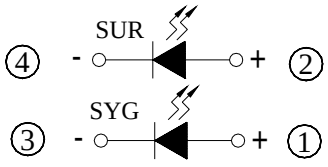


Polarity

For Reflow Soldering(Propose)

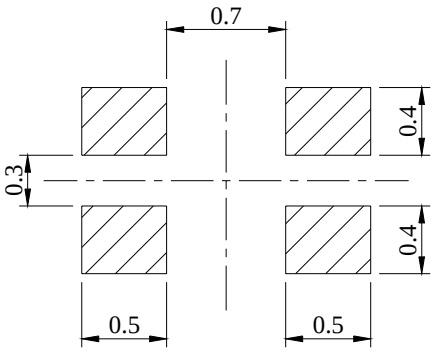


**Note:** The tolerances unless mentioned is ±0.1mm ,Unit = mm

**18-225SURSYGC/S530-A4/E4/TR8**

## Absolute Maximum Ratings (Ta=25℃)

| Parameter | Symbol | Rating | Unit |
|---|---|---|---|
| Reverse Voltage | $V_R$ | 5 | V |
| Forward Current | $I_F$ | SUR:25<br>SYG:25 | mA |
| Operating Temperature | Topr | -40 ~ +85 | ℃ |
| Storage Temperature | Tstg | -40 ~ +90 | ℃ |
| Soldering Temperature | Tsol | 260<br>(for 5 seconds) | ℃ |
| Power Dissipation | Pd | SUR:60<br>SYG:60 | mW |
| Peak Forward Current<br>(Duty 1/10 @1KHz) | $I_{FP}$ | SUR:60<br>SYG:60 | mA |

## Electro-Optical Characteristics (Ta=25℃)

| Parameter | Symbol | Min. | Typ. | Max. | Unit | Condition |
|---|---|---|---|---|---|---|
| Luminous Intensity | Iv SUR<br>SYG | 51<br>29 | 76<br>34 | ----- | mcd | $I_F$=20mA |
| Viewing Angle | 2$\theta$ 1/2 | ----- | 120 | ----- | deg | |
| Peak Wavelength | $\lambda$p SUR<br>SYG | ----- | 632<br>575 | ----- | nm | |
| Dominant Wavelength | $\lambda$d SUR<br>SYG | ----- | 624<br>573 | ----- | nm | |
| Spectrum Radiation Bandwidth | $\triangle\lambda$ | ----- | 20 | ----- | nm | |
| Forward Voltage | $V_F$ SUR<br>SYG | ----- | 2.0<br>2.0 | 2.4<br>2.4 | V | |
| Reverse Current | $I_R$ | ----- | ----- | 10 | $\mu$A | $V_R$=5V |

## Typical Electro-Optical Characteristics Curves

SUR

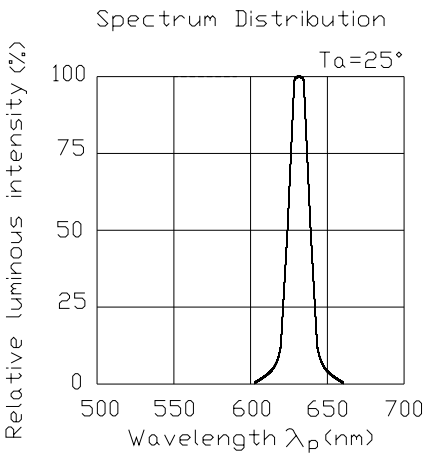


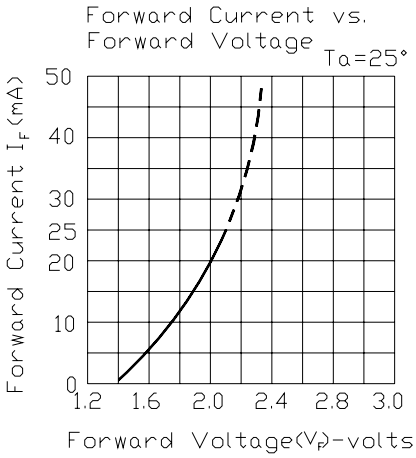


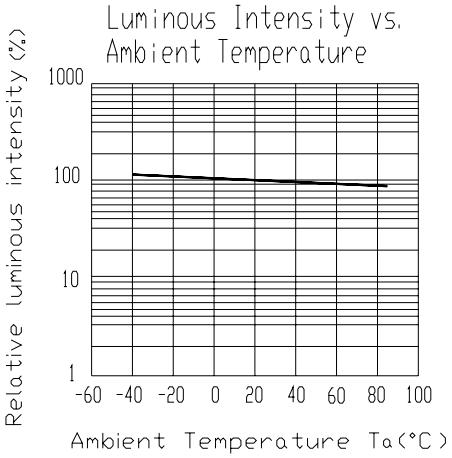


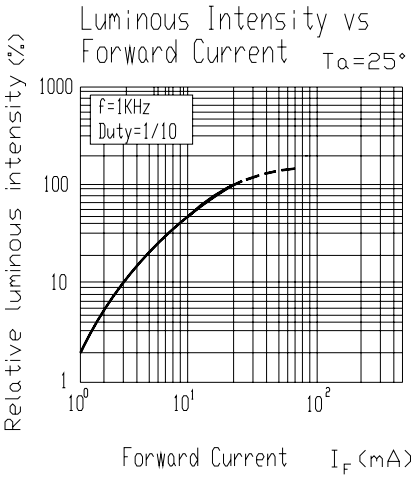


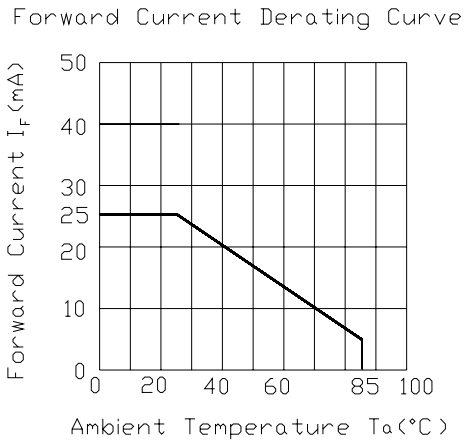


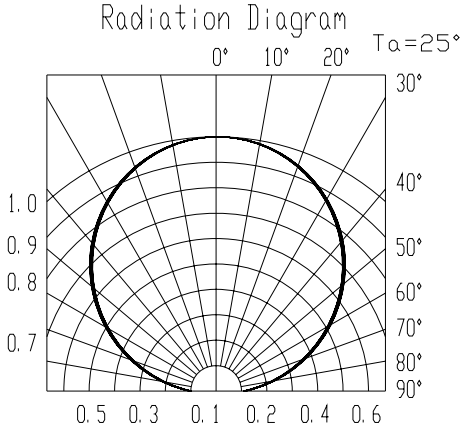

## Typical Electro-Optical Characteristics Curves

# SYG

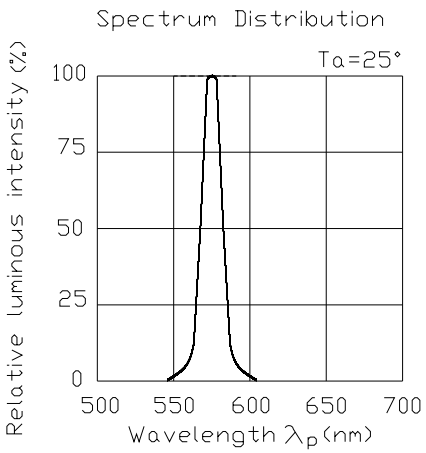


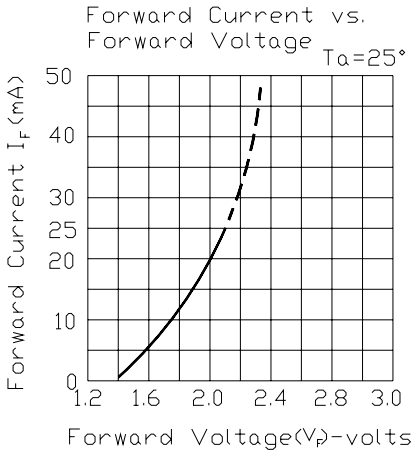


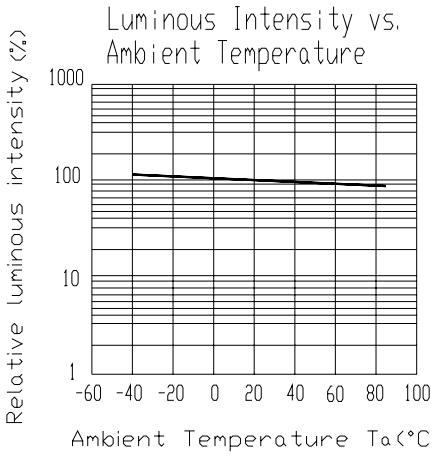


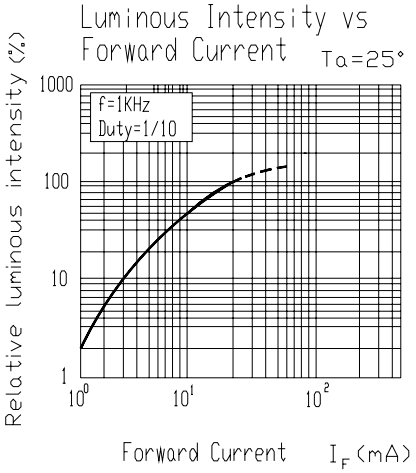


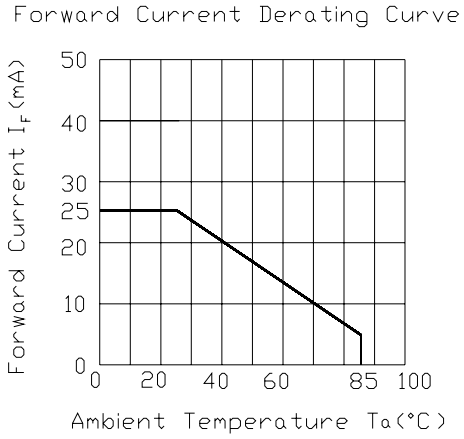


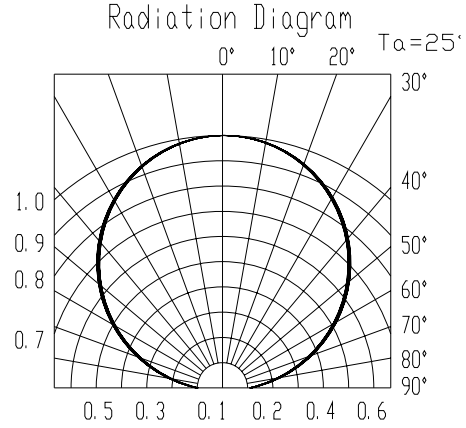

**18-225SURSYGC/S530-A4/E4/TR8**

## Label explanation

**CAT: Luminous Intensity Rank**

**HUE: Dom. Wavelength Rank**

**REF: Forward Voltage Rank**

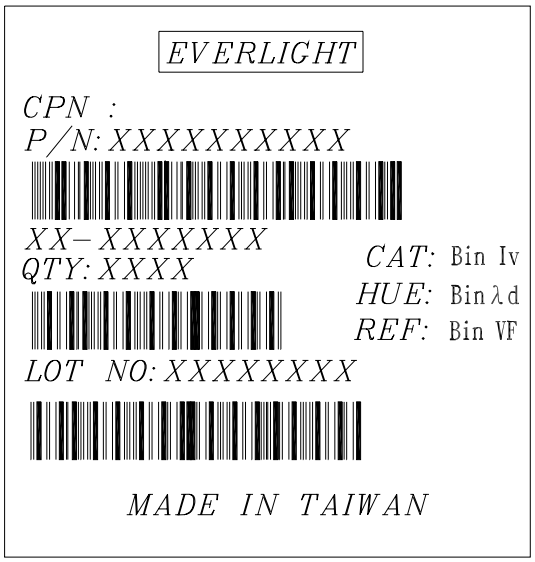


## Reel Dimensions

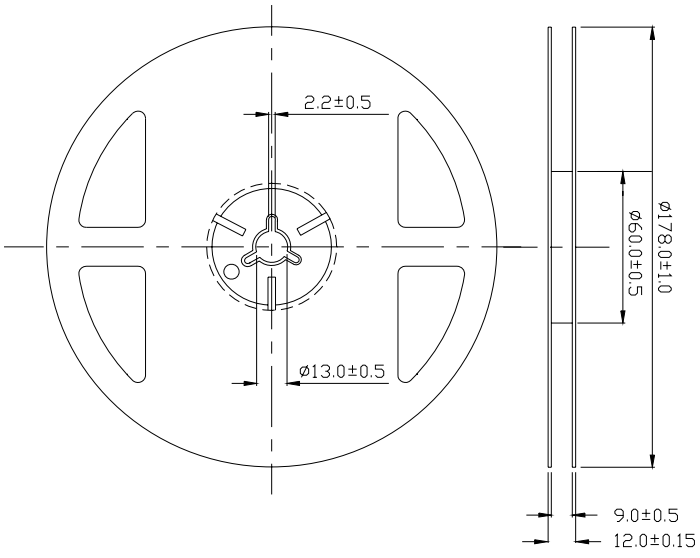


**Note:** The tolerances unless mentioned is ±0.1mm ,Unit = mm

## Carrier Tape Dimensions: Loaded quantity 3000 PCS per reel

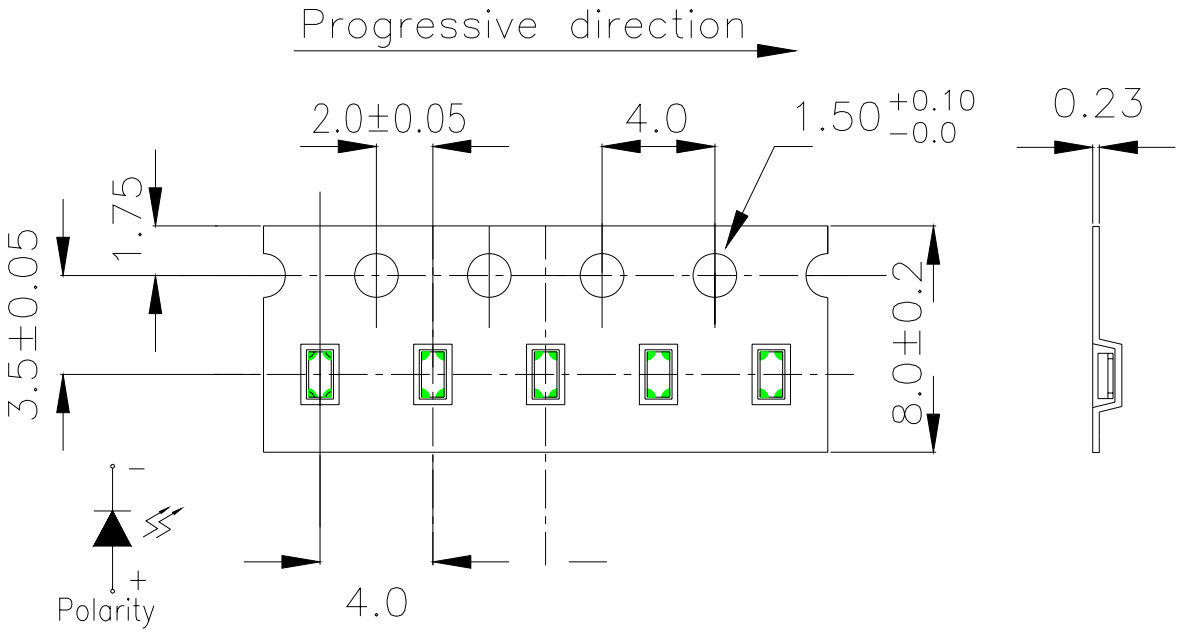


**Note:** The tolerances unless mentioned is ±0.1mm,Unit = mm

## Moisture Resistant Packaging

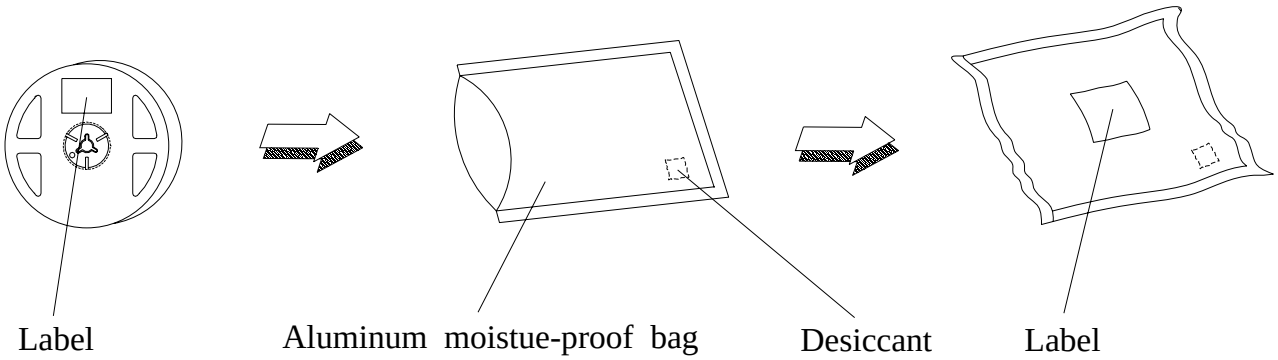

## Reliability Test Items And Conditions

The reliability of products shall be satisfied with items listed below.

Confidence level：90%

LTPD：10%

| No. | Items | Test Condition | Test Hours/Cycles | Sample Size | Ac/Re |
|---|---|---|---|---|---|
| 1 | Reflow Soldering | Temp. : 260℃±5℃<br>Min. 5sec. | 6 Min. | 22 PCS. | 0/1 |
| 2 | Temperature Cycle | H : +100℃ 15min<br>∫ 5 min<br>L : -40℃ 15min | 300 Cycles | 22 PCS. | 0/1 |
| 3 | Thermal Shock | H : +100℃ 5min<br>∫ 10 sec<br>L : -10℃ 5min | 300 Cycles | 22 PCS. | 0/1 |
| 4 | High Temperature Storage | Temp. : 100℃ | 1000 Hrs. | 22 PCS. | 0/1 |
| 5 | Low Temperature Storage | Temp. : -40℃ | 1000 Hrs. | 22 PCS. | 0/1 |
| 6 | DC Operating Life | $I_F$ = 20 mA | 1000 Hrs. | 22 PCS. | 0/1 |
| 7 | High Temperature / High Humidity | 85℃/ 85%RH | 1000 Hrs. | 22 PCS. | 0/1 |

## Precautions For Use

1. Over-current-proof

   Customer must apply resistors for protection , otherwise slight voltage shift will cause big current change ( Burn out will happen ).

2. Storage

   2.1 Do not open moisture proof bag before the products are ready to use.

   2.2 Before opening the package, the LEDs should be kept at 30℃ or less and 90%RH or less.

   2.3 The LEDs should be used within a year.

   2.4 After opening the package, the LEDs should be kept at 30℃ or less and 70%RH or less.

   2.5 The LEDs should be used within 168 hours (7 days) after opening the package.

   2.6 If the moisture absorbent material (silica gel) has faded away or the LEDs have exceeded the storage time, baking treatment should be performed using the following conditions.
   Baking treatment : 60±5℃ for 24 hours.

3. Soldering Condition

3.1 Pb-free solder temperature profile

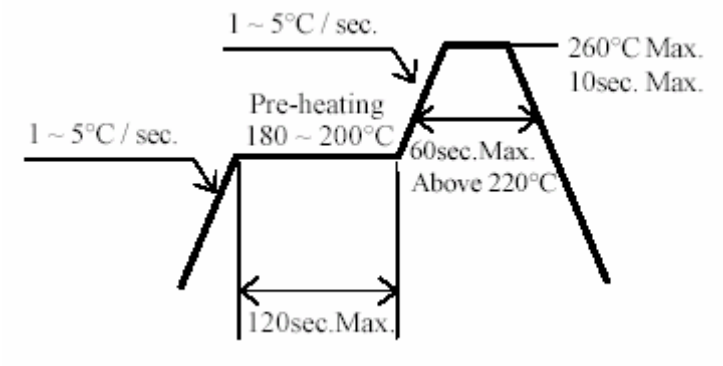


3.2 Reflow soldering should not be done more than two times.

3.3 When soldering, do not put stress on the LEDs during heating.

3.4 After soldering, do not warp the circuit board.

4.Soldering Iron

Each terminal is to go to the tip of soldering iron temperature less than 280℃ for 3 seconds within once in less than the soldering iron capacity 25W. Leave two seconds and more intervals, and do soldering of each terminal. Be careful because the damage of the product is often started at the time of the hand solder.

5.Repairing

Repair should not be done after the LEDs have been soldered. When repairing is unavoidable, a double-head soldering iron should be used (as below figure). It should be confirmed beforehand whether the characteristics of the LEDs will or will not be damaged by repairing.

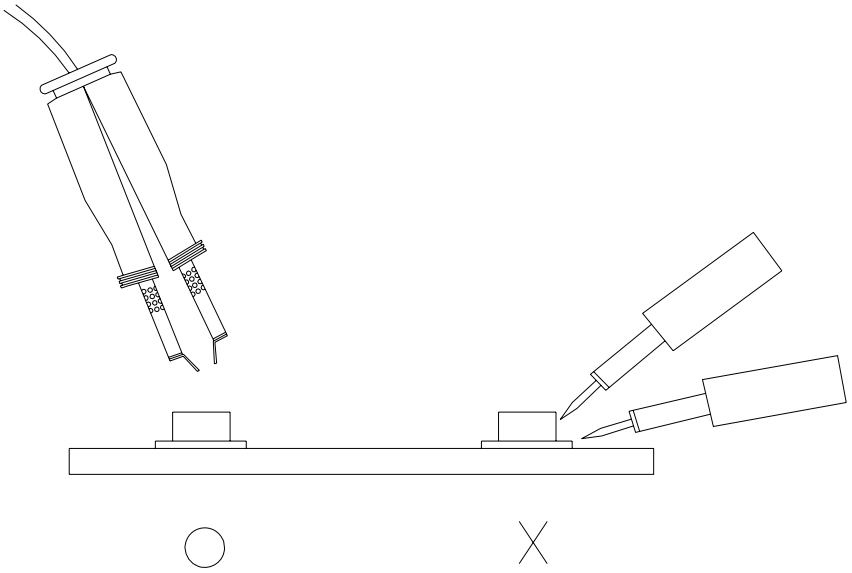

***EVERLIGHT ELECTRONICS CO., LTD.***
*Office: No 25, Lane 76, Sec 3, Chung Yang Rd,*
*Tucheng, Taipei 236, Taiwan, R.O.C*

*Tel: 886-2-2267-2000, 2267-9936*
*Fax: 886-2267-6244, 2267-6189, 2267-6306*
*http://www.everlight.com*