PART NO.	ENG. NO.
18-12-2222	2046-1(P901)L
18-12-2221	2046-1(P901)

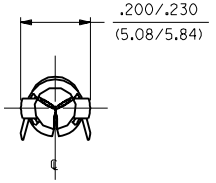

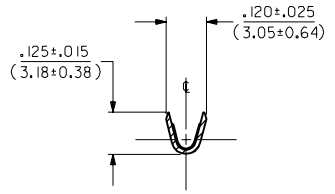

SECT. "B-B"

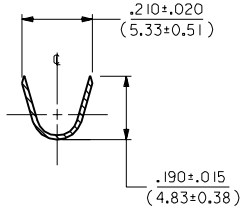

SECT. "A-A"

LEGEND

2046-1(****)*

- VERSION .120/(3.05) MAX. DIA. INSULATION
- FORM: BLANK=CHAIN, L=LOOSE
- P=PREPLATE, BLANK=POSTPLATE
- FINISH CODE

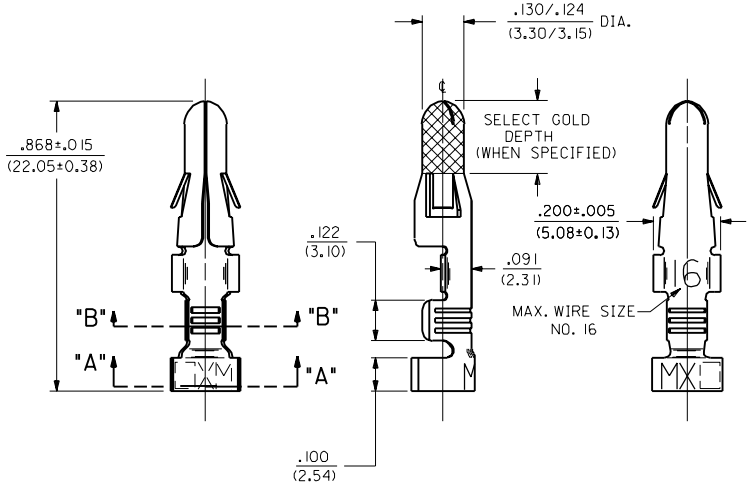

NOTES:

1. TERMINAL FOR USE WITH .125/(3.17) SERIES HOUSINGS AND WILL ACCEPT 16 THRU 18 AWG WIRE HAVING A .120/(3.05) MAX. DIAMETER INSULATION.
2. INSERTION FORCE: 6.0 LBS. MAX. WHEN TERMINAL IS INSERTED INTO .125/(3.17) DIA. CORE HOLE.
3. PULL OUT FORCE: 30 LBS. MIN. RETENTION IN HOUSING .

FINISH CODES:

901 HOT TIN DIP .000020/(0.0005 1) MIN.

MATERIAL NOTES:

1. CARTRIDGE BRASS, ALLOY #C26000; .013/(0.33) THICK, SPRING TEMPER

MFG.	SH.	REV.	LTR.	REVISIONS
			D1	OBS. -1(555) & -1(555)L ECR U6 0379 GK 9/21/95 RW
			D	ADD SELECT AREA ECR #U0 0230 3-5-90 RW
			C	REVISE PER ECR U9 1189 11-28-89 TRM
			B	REV. & REDRAWN ECR U8 1941 KBW 10-4-88 RW

DIMENSIONS SHOWN (METRIC) INCH

UNLESS OTHERWISE SPECIFIED TOLERANCES: ANGULAR ± 2°

	INCH	METRIC
3 PLACE	± .010	---
2 PLACE	± .014	± 0.25
1 PLACE	---	± 0.35

DRAFT WHERE APPLICABLE MUST REMAIN WITHIN DIMENSIONS

DRWG. BY KBW | CHK'D. BY RW | APP'D. BY RAS | SCALE 4 : 1

▽=0 ▼=0 REVISE ONLY ON CAD SYSTEM

TITLE: CRIMP TERMINAL, MALE, .125/(3.17) DIA 16-18 AWG .120/(3.05) DIA. INSUL.

MOLEX INCORPORATED LISLE,ILL. 60532 U.S.A. | SHEET NO. 1 OF 1 | DATE 10/4/88

PART NO. SEE CHART | DRWG. NO. SD-2046-1•

FILE NAME S2046X1.DGN

THIS DRAWING CONTAINS INFORMATION THAT IS PROPRIETARY TO MOLEX INC. AND SHOULD NOT BE USED WITHOUT WRITTEN PERMISSION

DIV. CP | SIZE C

NO P.S.