Rack-mounted Power Transducers 17-RACK

POTENTIOMETER CONVERTER

Functions & Features
- Providing a DC output proportional to a potentiometer or slidewire position input
- 50 % zero/span adjustments with minimal interaction

Typical Applications
- Tank levels
- Positions

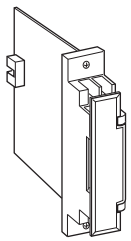

MODEL: 17MS–6–R

ORDERING INFORMATION

- Code number: 17MS-6-R

INPUT POTENTIOMETER

Total resistance 100 Ω – 10 kΩ

OUTPUT

Voltage

6: 1 – 5 V DC (Load resistance 2000 Ω min.)

POWER INPUT

DC Power

R: 24 V DC
(Operational voltage range 24 V ±10 %, ripple 10 %p-p max.)

GENERAL SPECIFICATIONS

Construction: Rack-mounted; terminal access via screw terminals on the front and connector on the rear; terminal cover provided
Connection:
  Input: M3.5 screw terminals (torque 0.8 N·m)
  Output: Connector
  Power input: Supplied from connector
Screw terminal: Nickel-plated steel
Isolation: Input to output to power
Zero adjustment: 0 – 50 % of total resistance (front)
Span adjustment: 50 – 100 % of total resistance (front)

INPUT SPECIFICATIONS

Minimum span: 50 % of total resistance
Excitation: Approx. 0.2 V DC

INSTALLATION

Current consumption: Approx. 35 mA
Operating temperature: -5 to +55°C (23 to 131°F)
Operating humidity: 40 to 85 % RH (non-condensing)
Mounting: Standard Rack 17BXE
Weight: 150 g (0.33 lb)

PERFORMANCE in percentage of span

Accuracy: ±0.3 %
Temp. coefficient: ±0.015 %/°C (±0.008 %/°F)
Response time: ≤ 0.5 sec. (0 – 90 %)
Line voltage effect: ±0.1 % over voltage range
Insulation resistance: ≥ 100 MΩ with 500 V DC
Dielectric strength: 1500 V AC @ 1 minute
(input to output or power)
500 V AC @ 1 minute (outut to power)
1500 V AC @ 1 minute (input or output or power to ground)

DIMENSIONS unit: mm (inch)

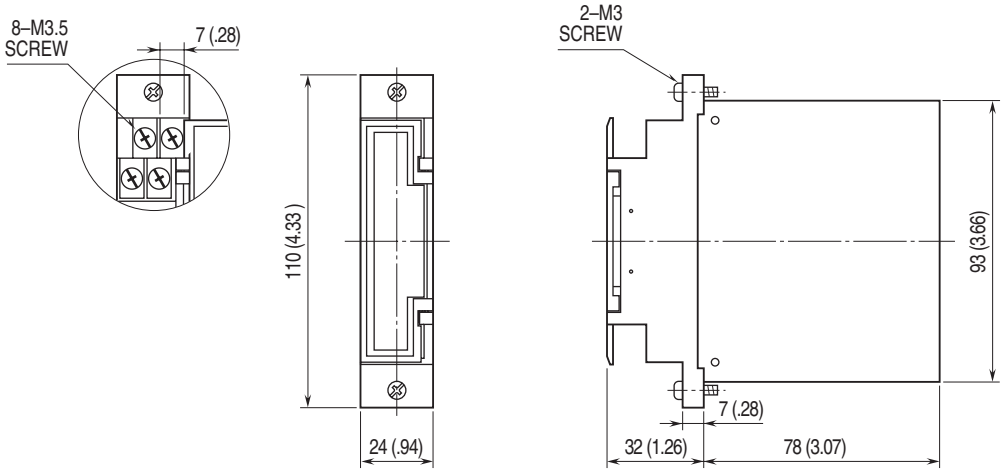

TERMINAL ASSIGNMENTS

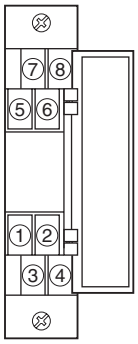

SCHEMATIC CIRCUITRY & CONNECTION DIAGRAM

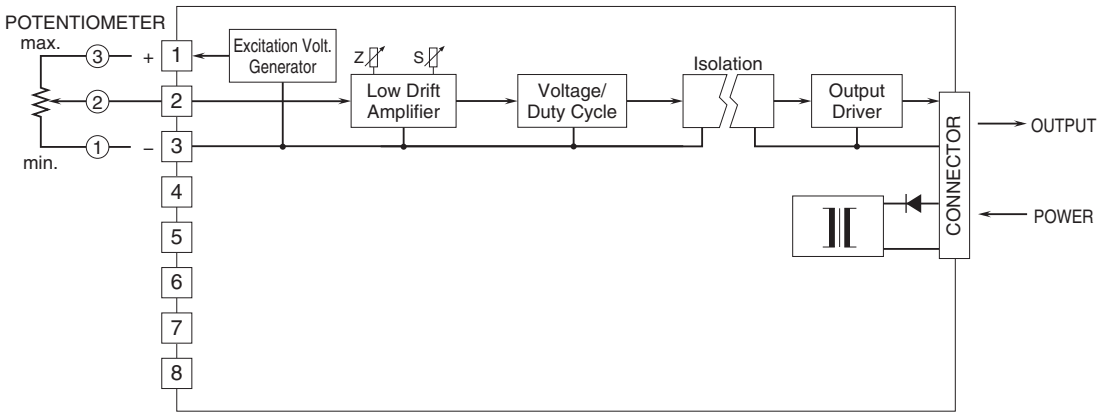

⚠ Specifications are subject to change without notice.